Printing Specification

1. Specification

Models	1. Model Name:	27GR95QE/27GR95QL
	2. Suffix:	AU
	3. Part No:	MBM67534405
	4. REV	REV03
	5. Number of pages	12
	6. Folded/Unfolded	Unfolded
SIZE	7. Trim size (W x H)_Unfolded (mm)	210 X 148 (A5)
	8. Trim size (W x H)_folded (mm)	-
	9. Bindery	Saddle stitching
COVER	10. Color (Cover)	1
	11. Paper (Cover)	Wood free
	12. Weight (cover) (g/m^2)	80
INNER	13. Color (inner)	1
	14. Paper (inner)	Wood free
	15. Weight (inner) (g/m^2)	80
	16. Coating	-
	17. Thomson	-
	18. Sub-material	-
	19. Languages	ENG (1)

1.1 Folding / Cover

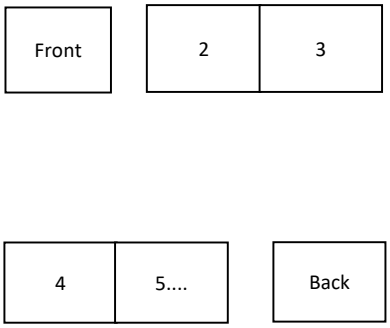

2. Origin Notification



Changes the Country name.
Printed in [Country Name]

[Country Name]

LGERS/ LGEMX :	Mexico
LGEKR:	Korea
LGEMA:	Poland
LGEND:	China
Others:	Each Country name.

NOTE

[Restriction of Hazardous Substances]
Hazardous substances on this product should be satisfied by substance regulation of Level A-I, A-II, SVHC according to LG(52)B–5011 standard.
Especially, Part should be followed and controlled the following specification.
(1) Hazardous substances test report should be submitted when part certification test and first mass production.
(2) Especially, Don't use or contain lead (Pb) and cadmium (Cd) in ink.

3. History

Rev. Number	Date	Description	ECO Number	Owner	
REV07					
REV06					
REV05					
REV04					
REV03	09/05/2023	Add 27GS95QE model name	ENMN900103	QIAN YU	
REV02	08/01/2023	Add 27GR95QL model name	ENMN700458	QIAN YU	
REV01	06/26/2023	To modified contents about changing the battery tray of the remote control.	ENMN600164	QIAN YU	
REV00	12/20/2022	-	-	Checked :	Yuri.Hong
				Approved :	Jongok.Kim
					Gowoon.Lee

LG
Life's Good

UltraGear™
(OLED Computer Monitor)

27GR95QE 27GR95QL

27GS95QE

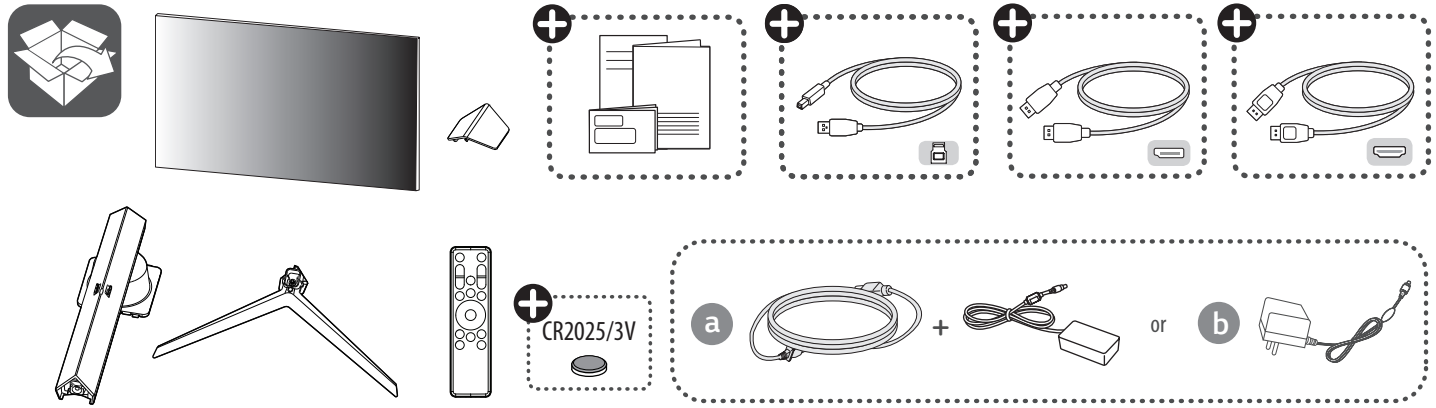

You can download manuals from the LGE website.
OWNER'S MANUAL AND REGULATORY INFO. are available at *https://www.lg.com/au/support/manuals*.
PLEASE READ SAFETY INFORMATION BEFORE INSTALLATION AND USE. SCAN QR CODE TO ACCESS.

MBM67534405
(2309-REV03)

www.lg.com



It is recommended that use the supplied components.

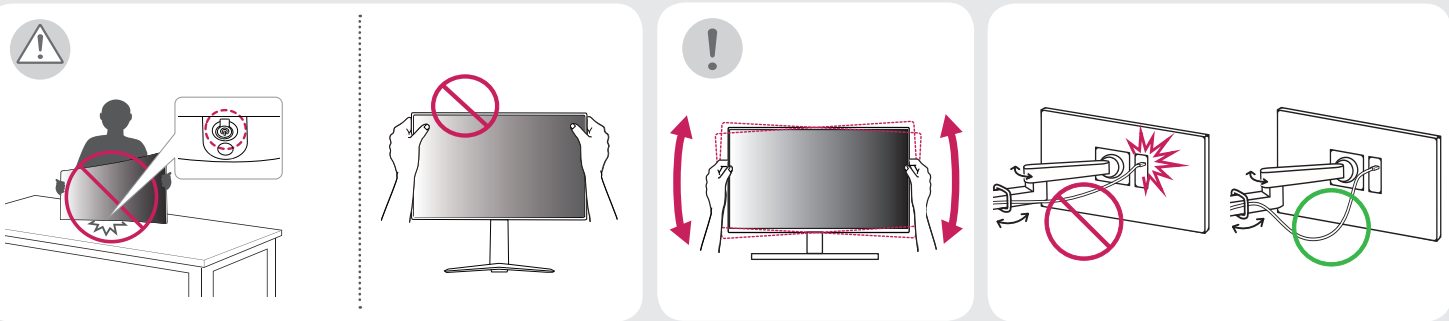

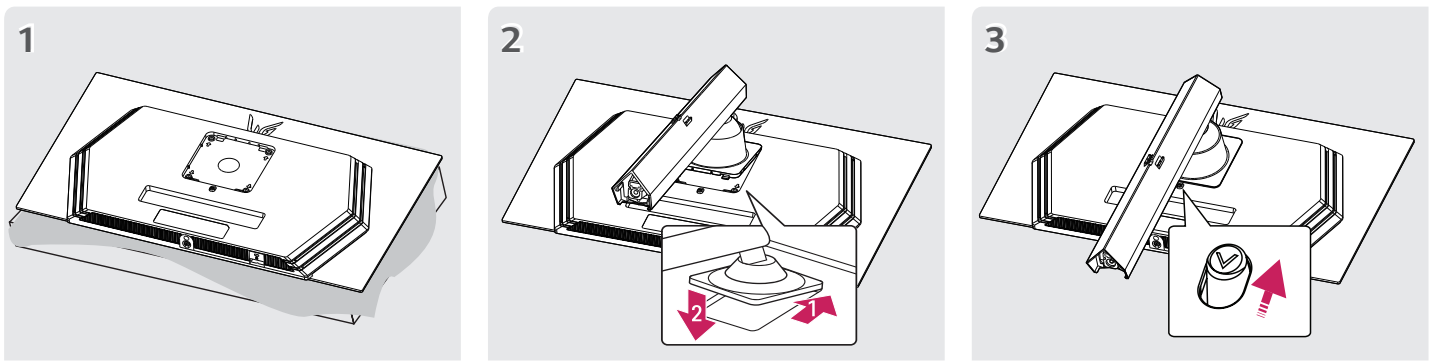
1
2
2
1
3

4

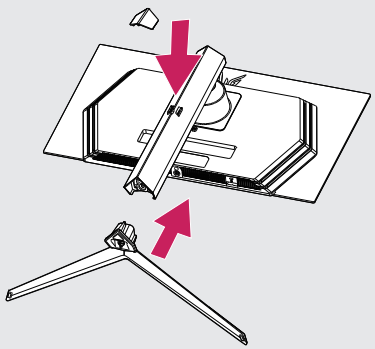

5

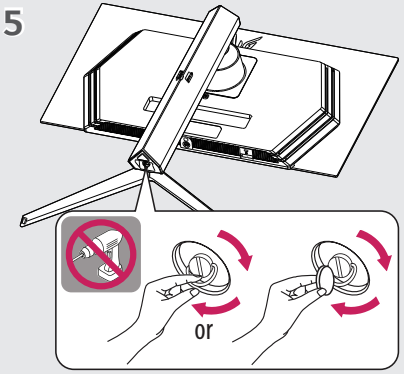

6

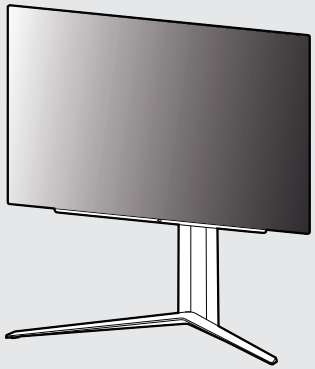

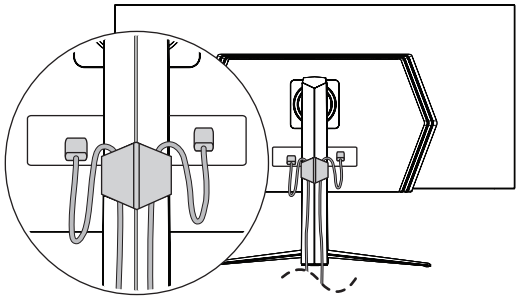

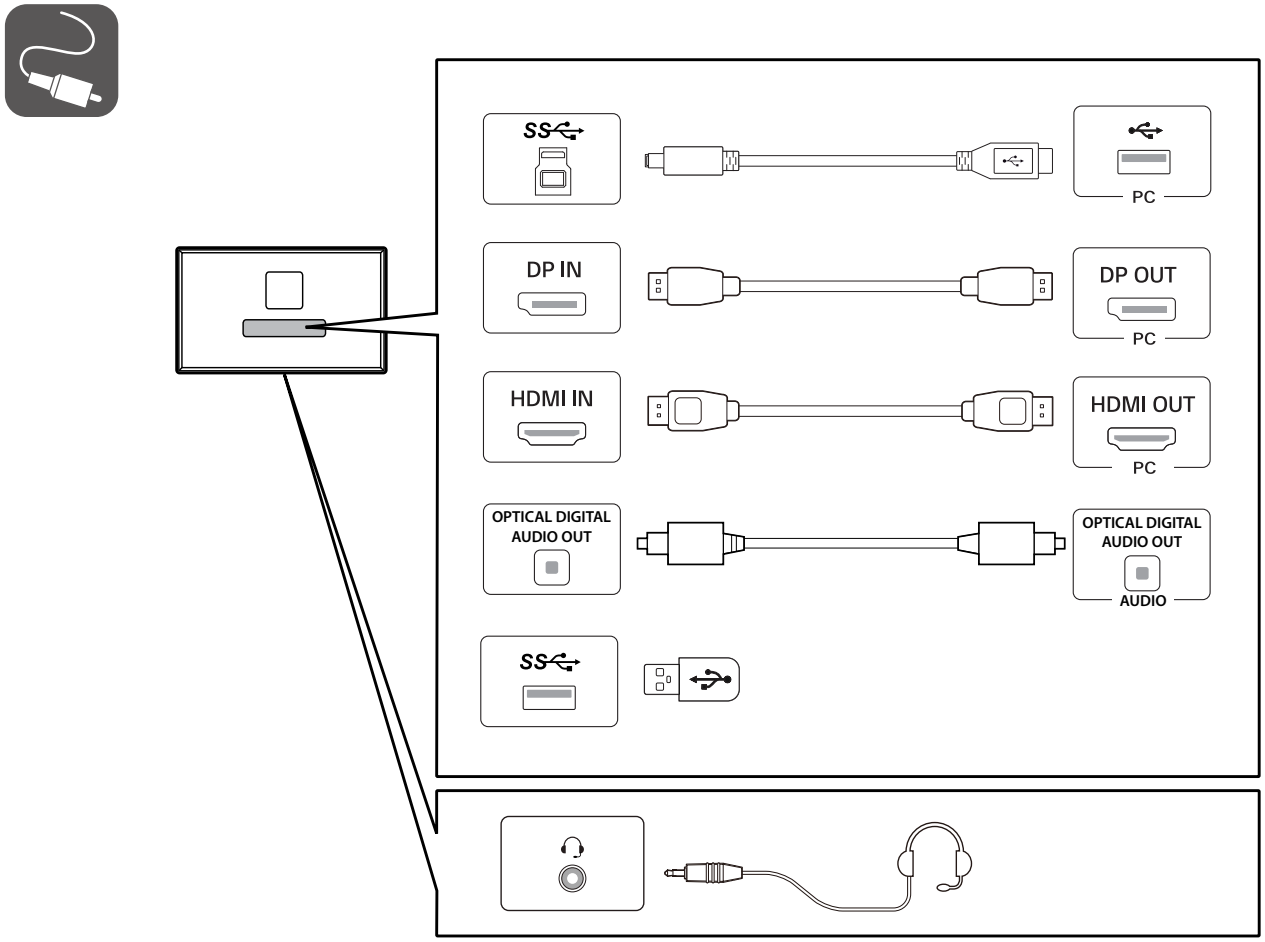
SS
PC
DP IN
DP OUT
PC
HDMI IN
HDMI OUT
PC
OPTICAL DIGITAL AUDIO OUT
OPTICAL DIGITAL AUDIO OUT
AUDIO
SS

- Using a DVI to HDMI / DP (DisplayPort) to HDMI cable may cause compatibility issues.
- The USB port on the product functions as a USB hub.
- Make sure to use the supplied cable. Otherwise, this may cause the device to malfunction.

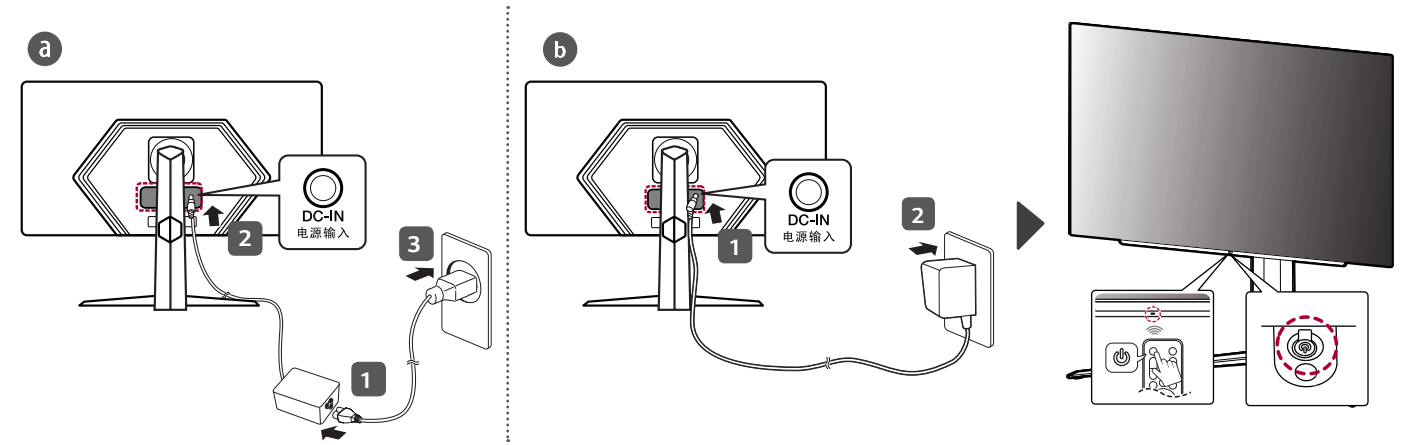
a
DC-IN
电源输入
2
3
1
b
DC-IN
电源输入
1
2



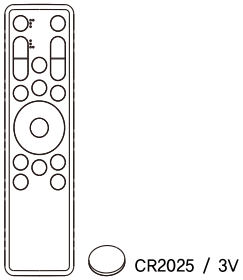

CR2025 / 3V

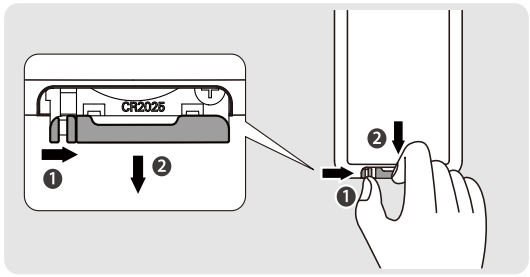

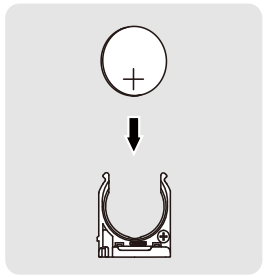

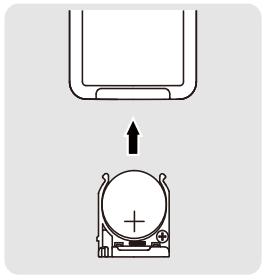



CAUTION

The battery is hazardous and is to be kept away from children (whether the battery is new or used).
The lithium battery can cause severe or fatal injuries in 2 hours or less if it is swallowed or placed inside any part of the body.
Medical attention should be sought immediately if it is suspected the battery has been swallowed or placed inside any part of the body.



LG
Life's Good