www.lg.com

MFL71833909
(2107-REV00)

50UP77*
55UP77*
60UP77*
65UP77*

Quick Start Guide

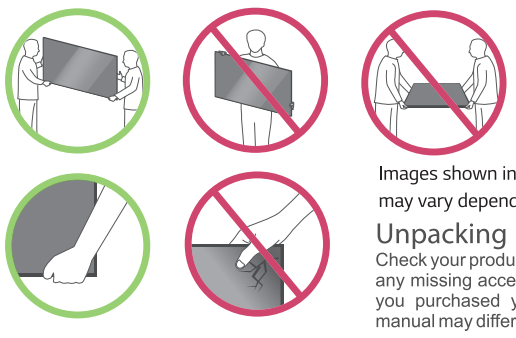

Images shown in manual
may vary depending on model

Unpacking

Check your product box for the following items. If there are any missing accessories, contact the local dealer where you purchased your product. The illustrations in this manual may differ from the actual product and item.

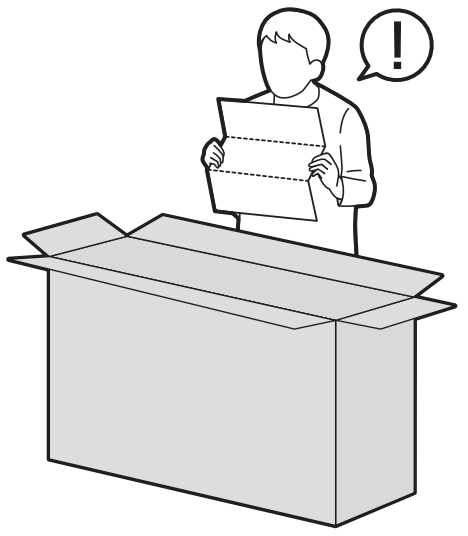

50/55UP77*

1

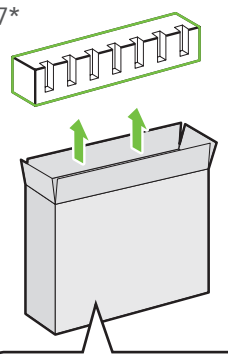

2

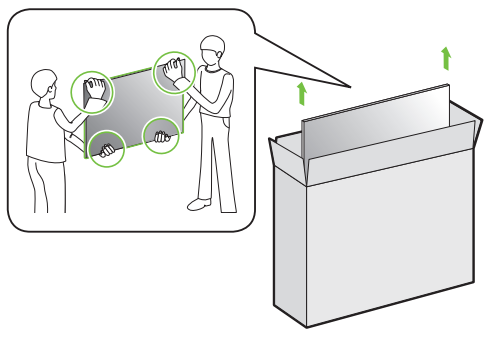

3

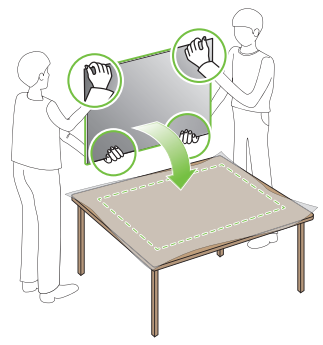



60/65UP77*

1

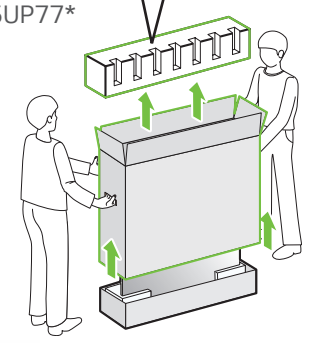

2

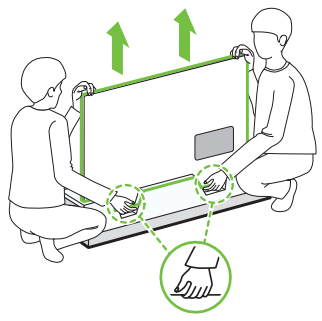

3

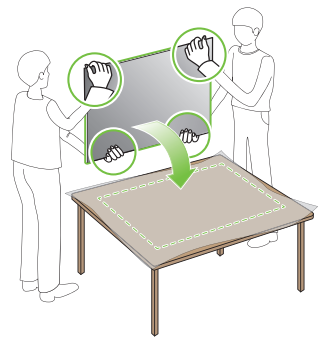

CAUTION

Image shown may differ from your TV

When attaching the stand to the TV set, place the screen facing down on a cushioned table or flat surface to protect the screen from scratches.

1

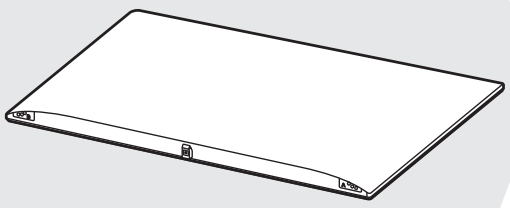

2

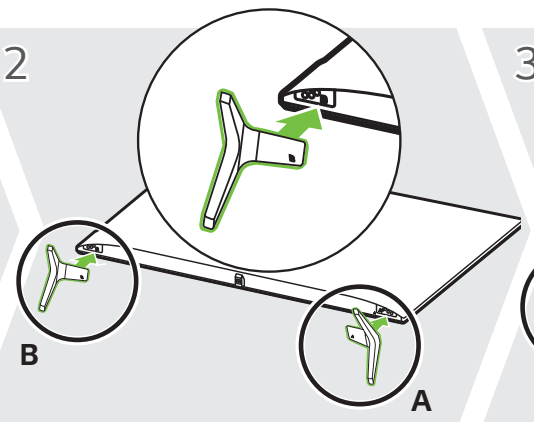

3

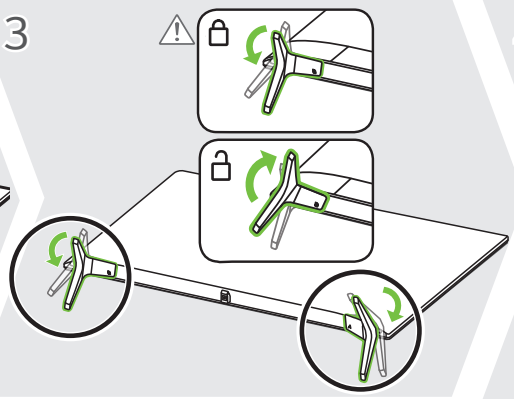

4-A 50/55UP77*

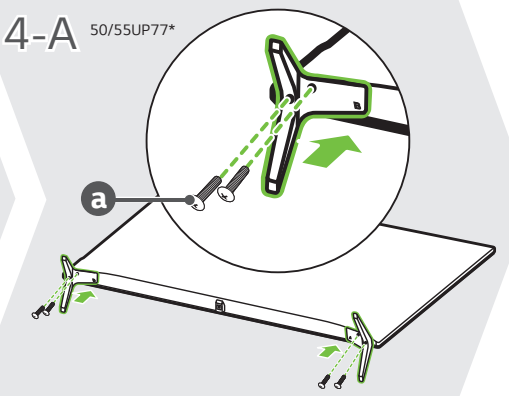

4-B 60/65UP77*

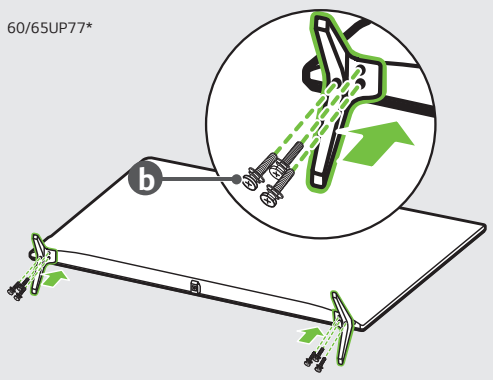

5

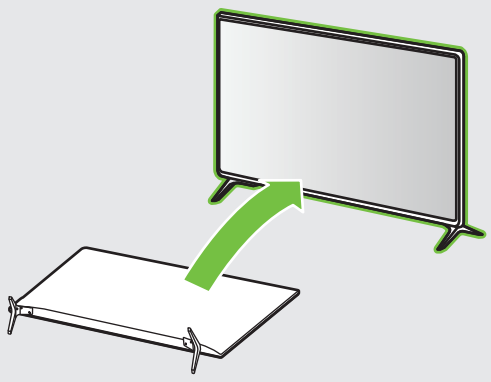

6

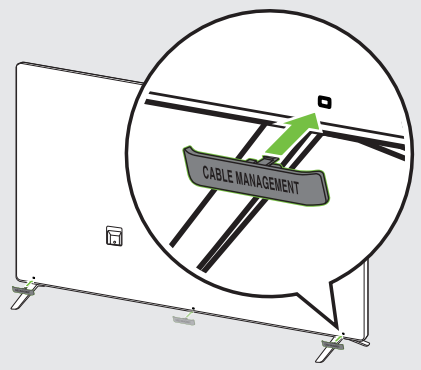

7

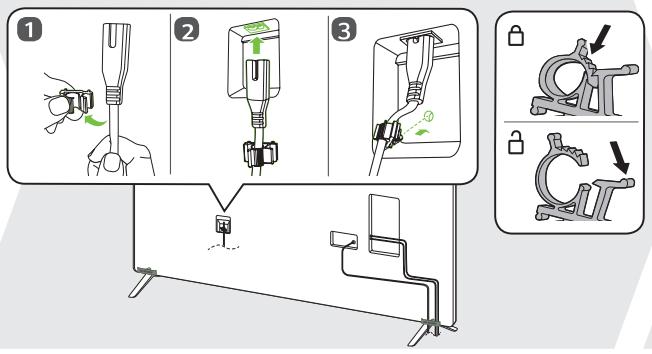

8

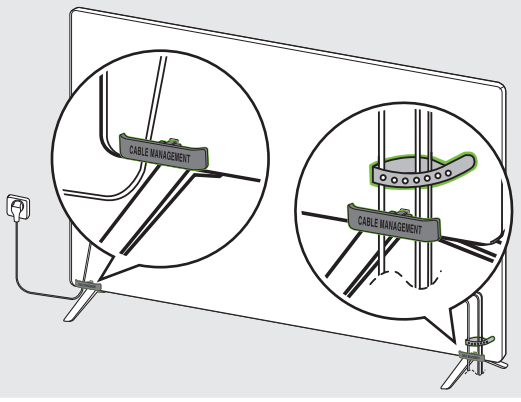

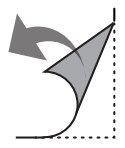



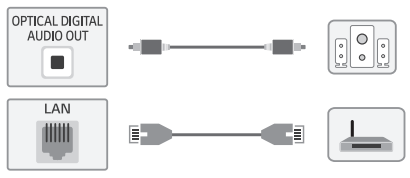

NOTE

- Do not look into the optical output ports, looking at the laser beam may damage your vision
- Audio with ACP (Audio Copy Protection) function may block digital audio output.



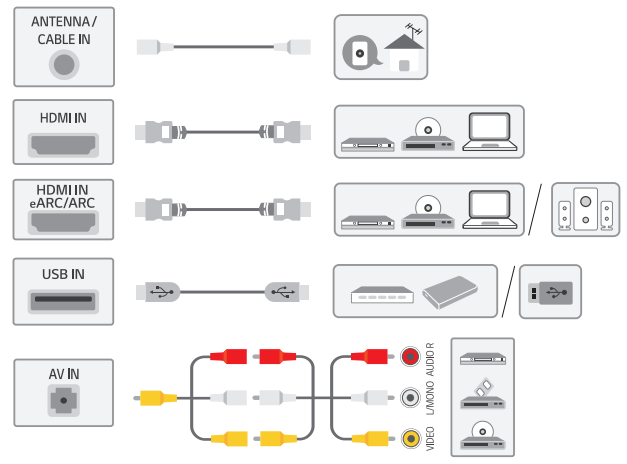

NOTE

- Some USB Hubs may not work, if a USB device connected using a USB Hub is not detected, connect it to the USB port on the TV directly
- Connect the external power source if your USB is needed.

ARC (Audio Return Channel)

- An external audio device that supports SIMPLINK and ARC must be connected using HDMI IN eARC/ARC port
- When connected with a high-speed HDMI cable, the external audio device that supports ARC outputs SPDIF audio without additional audio cable and supports the SIMPLINK function.

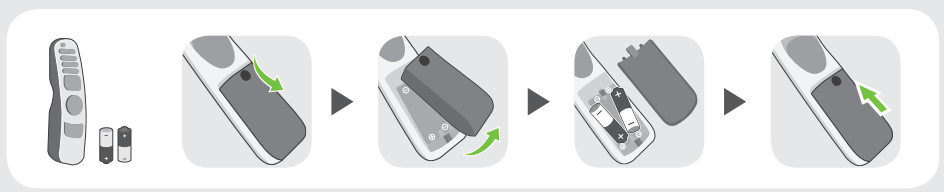



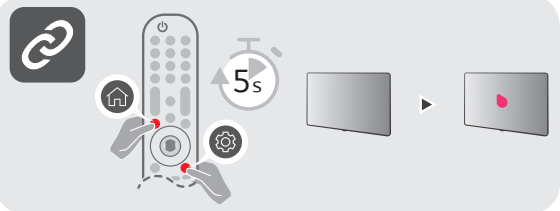



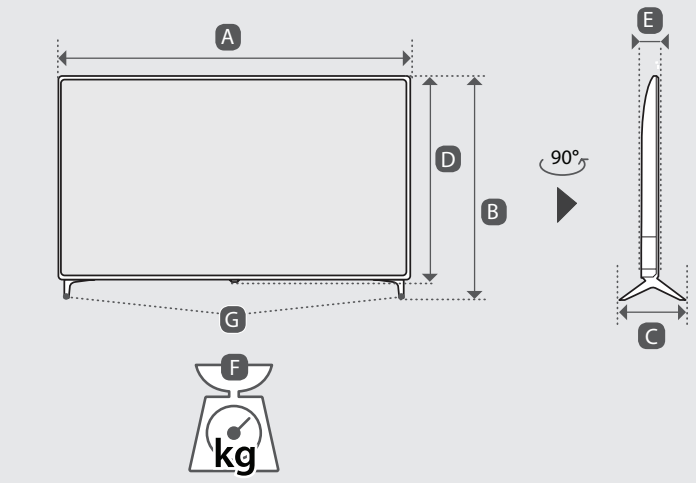

	A	B	C	D	E	F	F-G
	(mm)					(kg)	
50UP7750PTZ	1121	713	231	651	57.1	11.9	11.7
55UP7740PTZ 55UP7750PTZ	1235	776	231	715	57.5	14.2	14.0
55UP7720PTY	1235	772	235	715	57.5	14.1	14.0
60UP7750PTZ	1356	852	269	783	57.5	17.4	17.1
65UP7740PTZ 65UP7750PTZ	1454	906	269	838	57.7	21.8	21.5
65UP7720PTY	1454	900	255	838	57.7	21.7	21.5
Power requirement	AC 100-240 V ~ 50 / 60 Hz						

- Read **Safety and Reference.**
- The Analog Gender adapter can be purchased separately at Customer Service.

: Depending on model

IN002043