ENGLISH

www.lg.com

Copyright © 2026 LG Electronics Inc.
All Rights Reserved.

Display

OWNER'S MANUAL

Safety and Reference

Please read this manual carefully before operating your set and retain it for future reference.

The model and serial number of the product are located on the back and on one side of the product. Record them below in case you ever need service.

Model _____

Serial No. _____

MFL058142182605REV00

Before reading this manual

- The user manual for this product consists of two parts: the Owner's Manual and the User Guide. The Owner's Manual explains the steps to install the product purchased, and the electronic User Guide shows how to use the various features of the product.
- **Owner's Manual** : The Owner's Manual contains safety instructions that must be followed when using the product. It also explains how to connect an external device to the product as well as how to use the remote control. For more information about the components and installation instructions, see the separate guide provided with the product.
- **User Guide** : The electronic User Guide stored in the product provides more information about how to use various features.
  - ⊕ : This icon indicates that application may depend on model in Quick Setup Guide.

Note

- LG Electronics is not responsible for product failure or injury caused by the use of non-genuine imitation products.
- Product components and accessories are subject to change without prior notice through performance upgrades. The model name or design may be changed depending on the manufacturer's circumstances or policies.
- Images shown in this manual may differ from the actual product.

Separate Purchase

Strap (WS26XA)	Accessory for wall-mounting the product. - Be sure to use the included accessories to hang it on the wall. Please use the strap wall mount only for its intended purpose.
One-Click Stand (HS26XA)	Desktop stand accessory supporting both landscape and portrait orientation viewing.
Smart Cam (VC25GA)	Accessory that can be mounted on the product and used as a camera.

- Separate purchase items can be changed or modified for quality improvement without any notification. Contact your dealer to buy these items. These devices only work with certain models.
- A cable to connect external devices must be purchased separately.

Warning! Safety instructions

CAUTION
RISK OF ELECTRIC SHOCK
DO NOT OPEN

CAUTION : TO REDUCE THE RISK OF ELECTRIC SHOCK, DO NOT REMOVE COVER (OR BACK). NO USER-SERVICEABLE PARTS INSIDE. REFER TO QUALIFIED SERVICE PERSONNEL.

This symbol is intended to alert the user to the presence of uninsulated "dangerous voltage" within the product's enclosure that may be of sufficient magnitude to constitute a risk of electric shock to persons.

This symbol is intended to alert the user to the presence of important operating and maintenance (servicing) instructions in the literature accompanying this apparatus.

WARNING : TO REDUCE THE RISK OF FIRE AND ELECTRIC SHOCK, DO NOT EXPOSE THIS PRODUCT TO RAIN OR MOISTURE.

- TO PREVENT THE SPREAD OF FIRE, KEEP CANDLES OR OTHER ITEMS WITH OPEN FLAMES AWAY FROM THIS PRODUCT AT ALL TIMES.
- **Installation**
  - Do not place the device and/or remote control in the following environments:
    * An area exposed to direct sunlight.

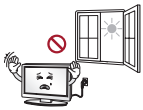

    * An area with high humidity such as a bathroom.

    * Near any heat source such as stoves and other devices that produce heat.

    * Near kitchen counters or humidifiers where they can easily be exposed to steam or oil.

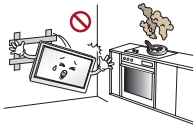

    * Near flammable objects such as gasoline or candles.

    * An area exposed to rain or wind.

    * An area that may be exposed to water droplets or splashes.

    * Do not place items containing liquid—such as vases, cups, etc.—on top of the device or its main unit (e.g., the shelves above the unit).

    * An area that may be directly exposed to air conditioner airflow.

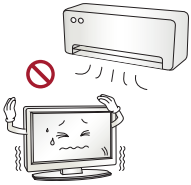

    * An area with excessive dust.

Otherwise, this may result in fire, electric shock, combustion/explosion, malfunction or product deformation.

- **Ventilation**
  - Install the device where there is proper ventilation.
  - Do not install in a confined space such as a bookcase.

  - Do not install the device on a carpet or cushion.

  - Do not block or cover the device with cloth or other materials while unit is plugged in.

- Take care not to touch the ventilation openings. When watching the product for a long period, the ventilation openings may become hot.
- Protect the power cord from physical or mechanical abuse, such as being twisted, kinked, pinched, closed in a door, or walked upon. Pay particular attention to plugs, wall outlets, and the point where the cord exits the device.
- Do not move the product while the Power cord is plugged in.
- Do not use a damaged or loosely fitting power cord.
- Be sure to grasp the plug when unplugging the power cord. Do not pull on the power cord to unplug the product.
- Do not connect too many devices to the same AC power outlet as this could result in fire or electric shock.
- **Disconnecting the Device from the Main Power**
  - The power plug is the disconnecting device. In case of an emergency, the power plug must remain readily accessible.
- Do not let your children climb or cling onto the product. Otherwise, the product may fall over, which may cause serious injury.

- **Grounding** (Except for devices which are not grounded.)
  - The product with a three-prong grounded AC plug must be connected to a three-prong grounded AC outlet. Ensure that you connect the earth ground wire to prevent possible electric shock.
- Never touch this apparatus or antenna during a lightning storm. You may be electrocuted.
- Make sure the power cord is connected securely to the product and wall socket. If not secured, damage to the Plug and socket may occur and in extreme cases a fire may break out.
- Do not insert metallic or inflammable objects into the product. If a foreign object is dropped into the product, unplug the power cord and contact the customer service.
- Do not touch the end of the power cord while it is plugged in. You may be electrocuted.
- **If any of the following occur, unplug the product immediately and contact your local customer service.**
  - The product has been damaged.
  - If water or another substance enters the product (like an AC adapter, power cord, or product).
  - If you smell smoke or other odors coming from the product.
  - When lightning storms or when unused for long periods of time.

  Even when the product is turned off by remote control or button, the unit remains connected to the AC power source if plugged in.
- **Power Saving**
  - Turn off the device after use, and unplug the power cord if it will not be used for a longer period of time (for Non-OLED devices only).

- Do not use high voltage electrical equipment near the product (e.g., a bug zapper). This may result in product malfunction.
- Turning on the power while the product and power cord are wet may cause the product to malfunction or result in an electric shock.
- Do not attempt to modify this product in any way without written authorisation from LG Electronics. Accidental fire or electric shock can occur. Contact your local customer service for service or repair. Unauthorised modification could void the user's authority to operate this product.
- Use only authorised attachments / accessories approved by LG Electronics. Otherwise, this may result in fire, electric shock, malfunction, or product damage.

- Never disassemble the AC adapter or power cord. This may result in fire or electric shock.
- To reduce the risk of fire or electrical shock, do not touch the product with wet hands. If the power cord prongs are wet or covered with dust, dry the power plug completely or wipe dust off.
- Please make sure the device is installed near the wall outlet to which it is connected and that the outlet is easily accessible.
- **Batteries**
  - Store the accessories (battery, etc.) in a safe location out of the reach of children.
  - Do not short circuit, disassemble, or allow the batteries to overheat. Do not dispose of batteries in a fire. Batteries should not be exposed to excessive heat.
  - Caution: Use the correct batteries for the product. Risk of fire or explosion if the battery is replaced by an incorrect type.
  - Do not store or transport the product at pressures of less than 11.6 kPa and altitudes above 15,000 m.
- **Remote Control**
  - Check the condition of the remote control batteries regularly to prevent corrosion of the contacts.

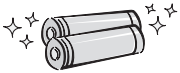

- **Moving**
  - When moving, make sure the product is turned off, unplugged, and all cables have been removed. It may take 2 or more people to carry larger products. Do not press or put stress on the front panel of the product. Otherwise, this may result in product damage, fire hazard or injury.
  - Secure the product safely when moving it after loading. Impact may result in product damage.
- Keep the packing anti-moisture material or vinyl packing out of the reach of children.
- Do not allow an impact shock or any objects to fall into the product, and do not drop anything onto the screen.
- Do not press strongly upon the panel with a hand or a sharp object such as a nail, pencil, or pen, or make a scratch on it. It may cause damage to screen.
- Do not hold the product screen, scratch the surface with a metal object, or apply impact to it.
  - The screen may break, resulting in personal injury or malfunction of the product.
- Do not subject the touch screen to severe impact. Doing so may damage the touch sensors (touch screen).
- Please use and charge the product by connecting it to a socket in its correct position.
- Discolouration or damage may occur if cosmetics or oils come into contact with the product.
- Applying excessive force when adjusting the height, tilting, swivelling, or rotating the screen may damage the product.
- Prolonged exposure to direct sunlight may cause discolouration of the product exterior.
- Exercise caution to prevent hands, feet, hair, or clothing from becoming caught in the stand base or wheels.
- Do not push or kick the product.
- Do not place heavy objects on top of the product.
- Do not ride the product like a kickboard.
- Be careful if you have pets.
- Do not force the product to rotate at an angle that exceeds its limit.
- Do not insert fingers into product gaps or moving parts. Doing so may result in injury.
- Exercise caution when detaching the display head to prevent dropping. Do not attempt detachment while the display head is in a lowered position, as the stand may recoil upward and cause injury.
- **Cleaning**

  The product is not waterproof.
  - When you clean the device, unplug the power cord and wipe gently with a soft/dry cloth.

  - Do not spray water or other liquids directly on the device.
  - Do not clean the device with chemicals such as glass cleaner, air freshener, insecticide, lubricants, wax (car, industrial), abrasive, thinner, benzene, alcohol, etc., which can damage the device and/or its panel. Otherwise, this may result in electric shock or device damage.

- **Precautions when using the built-in battery**
  - If liquid leaks from the battery, stop using it immediately and avoid contact with your skin and eyes. It may cause blindness or burns. If any abnormality is found in the body part that came into contact with liquid, wash the area with sufficient water and seek advice from a doctor.
  - Do not dispose of batteries in an incorrect manner. Doing so creates a risk of explosion or fire. Battery disposal guidelines vary by country and region. Please dispose of batteries in the proper manner.
  - Do not subject the product to shock (particularly the lithium battery). Do not expose it to fire, electric heaters, or direct sunlight. Doing so may result in electric shock, injury, or fire.
  - When charging the battery, ensure it is correctly inserted, and do not use any other power supply or circuit. There is a risk of battery damage or fire.
  - Be careful when using the battery as it contains lithium. There is a risk of fire or explosion.
  - Make sure to use a genuine adaptor/battery approved by LG Electronics. Failure to do so may result in shorter product life or malfunction and may also cause overheating, fire, explosion, or injury.
  - Clean the charging terminal using a soft cloth. If the charging terminal is dirty or has foreign substances on it, the battery will not charge normally.
  - If the battery is completely discharged and not used for a long period of time, it may not charge at all or the battery life may be reduced.
  - Do not disconnect, disassemble, or short circuit the battery. Doing so may result in electric shock, injury, or fire. If you or a third party have disassembled/assembled any part of the product or battery without contacting the LG Electronics Service Centre, you will not be able to receive any repair services or compensation in the event of product failure, safety accidents or injury.
  - Do not remove the battery from the product. Doing so may result in electric shock, injury, or fire. If you or a third party have disassembled/assembled any part of the product without contacting the LG Electronics Service Centre, you will not be able to receive any repair services or compensation in the event of product failure, safety accidents or injury.
  - The battery may explode if disposed of in a fire or hot oven, or if mechanically crushed or cut.
  - Leaving the battery in an extremely high-temperature environment may cause an explosion or leakage of flammable liquids or gases.
  - Extremely low air pressure may cause the battery to explode or leak flammable liquids or gases.

- **Precautions when using the coin battery**
  - Do not ingest the battery. Chemical burn hazard.
  - The remote control supplied with this product contains a coin / button cell battery. If the coin / button cell battery is swallowed, it can cause severe internal burns in just 2 hours and can lead to death.
  - Keep new and used batteries away from children.
  - If the battery compartment fails to close securely, do not use the remote control and keep it away from children.
  - If you think batteries might have been swallowed or placed inside any part of the body, seek immediate medical attention.
  - Keep the remote control away from medical devices. The magnet in the remote control may interfere with the operation of pacemakers, other implantable medical devices, and nearby medical equipment.

Installation

Lifting and moving the Product

Please note the following advice to prevent the product from being scratched or damaged and for safe transportation regardless of its type and size.

- It is recommended to move the product in the box or packing material that the product originally came in.
- Before moving or lifting the product, disconnect the power cord and all cables.
- When holding the product, the screen should face away from you to avoid damage.
- Hold the top and bottom of the product frame firmly. Make sure not to hold the transparent part, speaker, or speaker grill area.
- When transporting the product, do not expose the product to jolts or excessive vibration.
- When transporting the product, keep the product upright, never turn the product on its side or tilt towards the left or right.
- Do not apply excessive pressure to cause flexing / bending of frame chassis as it may damage screen.
- When handling the product, be careful not to damage the protruding buttons.

⚠

- Avoid touching the screen at all times, as this may result in damage to the screen.

Installing the Stand

When installing the stand, maintain a distance of at least 10 cm between the stand and the ceiling and the left and right walls, and at least 10 cm between the stand and the back wall.

- When assembling or removing the stand, hold the stand while tightening or loosening the screws. The stand may fall and cause product damage or injury.

⚠

- Do not apply foreign substances (oils, lubricants, etc.) to the screw parts when assembling the product. (Doing so may damage the product.)
- Do not use any unapproved items to ensure the safety and product life span.
- Any damage or injuries caused by using unapproved items are not covered by the warranty.
- If you install the product on a stand, you need to take actions to prevent the product from overturning. Otherwise, the product may fall over, which may cause injury.
- When assembling the stand, ensure that all of the provided screws are attached. If the screws are not fully tightened, the product may tilt or tip over, resulting in damage. Tightening the screws with excessive force may cause them to come off due to abrasion of the screw joint.

How to use Mount rubber bracket

If you are moving the product from a location other than flat ground, be sure to install the mount rubber bracket.

1 Attach the Mount rubber bracket to the bottom of the product.
   - Tilt the set and attach the mount rubber brackets.
2 Press firmly the mount rubber bracket to ensure firm fastening.

Note

- It can prevent the product from slipping.
- Please do not fix mount rubber bracket with excessive force.

Mounting by fixing to the wall

How to fasten anchors and screws

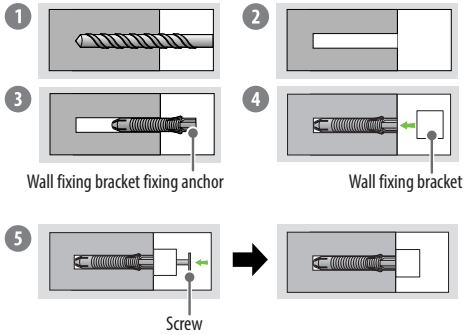

1 Drill holes in anchor locations with a drill bit of Ø 8 mm to a depth of 80 mm to 100 mm.
2 Clean the drilled holes.
3 Insert the enclosed wall fixing bracket fixing anchor into the hole. (Use a hammer when inserting anchors.)
4 Attach the wall fixing bracket close to the wall, according to the hole position.
5 Fit the wall fixing bracket to the hole. At this time, tighten the screws to a torque of between 45 kgf/cm to 60 kgf/cm.

- Check the material of the wall and the thickness of the finishing.
- Use the Wall mount anchor for wall material of concrete, light concrete, strong natural stone, soft natural stone masonry brick and hallow block that do not crack.

Wall Material	Tools	Wall Width
Concrete	Wall fixing bracket, Wall fixing bracket fixing screw, wall fixing bracket fixing anchor, drill bit	70 mm
Brick		
Natural stone		
Metal Panel		
Plywood	Wall fixing bracket, Wall mounting bracket fixing screw, drill bit (Ø 1.8)	30 mm
EPS Panel		Penetrate the wall
Plasterboard + Plywood		30 mm

Operating the product

Turning on the product

Using the button

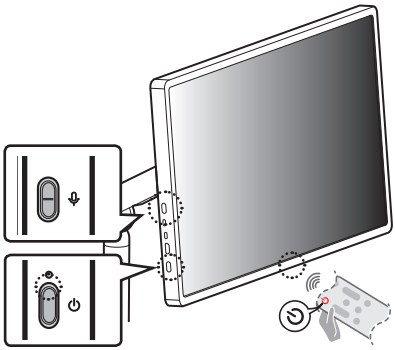

You can simply operate the product functions, using the button.

🎙	Use the 🎙 button to turn the microphone function on and off.
⏻	Turn the product on and off. - A short press turns the product on, and a long press shuts down all functions and turns off the screen. Press and hold for more than 7 seconds to force restart.

Note

- The shape and location of the power button may vary depending on the product model.
- When the screen is powered on for the first time, it may turn on after approximately one minute to complete the initialisation of the product.

About LED operation

Battery status can be checked via the LED indicator above the power button. In standby mode, the battery status LED is only displayed during charging.

Note

- The red LED is displayed during charging, and the white LED is displayed when fully charged.

Using the touch screen

Tap	Tap the screen lightly.
Tap and hold	Tap the screen for 2 seconds or longer.
Scroll	Scroll the screen up, down, left, and right.
Drag	Tap and hold the item you wish to move, such as an app or widget, and drag it to the desired location.
Pinch-Close / Pinch-Open	You can zoom in or out on the app by placing two fingers on the screen and spreading them apart or bringing them together.

Note

- Touch functions such as zooming in and out on the screen may not be supported, depending on the app used.
- Avoid pressing too hard on the screen; instead, tap lightly on the desired item with your fingertips. If you touch the screen while wearing gloves or with the tip of your fingernails, it may not work correctly.
- Touch sensors may not work correctly if the screen is moist or wet.

Connections

Other devices, such as HDMI, can be connected to the product.

When connecting with an external device, locate and select the device with which you wish to connect on the Home screen.

HDMI

- When connecting the HDMI cable, the product and external devices should be turned off and unplugged.

Note

- Use a certified cable with the HDMI logo attached.
- If you do not use a certified HDMI cable, the screen may not display or a connection error may occur.
- Recommended HDMI Cable Types
  - Ultra High Speed HDMI®/™ cable (3 m or less)

USB

Some USB Hubs may not work. If a USB device connected using a USB Hub is not detected, connect it to the USB-C™ port on the product directly.

- Use a certified USB-C™ cable.
- Use a USB-A to C adapter when the product port and device port (USB-A) are incompatible.
- The USB-C® port can connect with DisplayPort Alternate or devices that support USB-PD.

Note

- For an optimal connection, HDMI cables and USB devices should have bezels less than 10 mm thick and 18 mm width. Use an extension cable that supports USB 2.0 if the USB cable or USB memory stick does not fit into your product's USB port.

USB PD Charging Function

- To charge the product, the external power source (such as USB PD charger) must support USB Power Delivery with output specifications of either 100 W (20 V / 5 A), 140 W (28 V / 5 A).

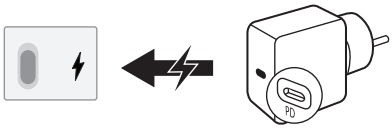

External Devices

Available external devices are: Blu-ray player, HD receivers, DVD players, VCRs, audio systems, USB storage devices, PC, gaming devices, and other external devices.

Note

- The external device connection may differ from the model.
- In PC mode, there may be noise associated with the resolution, vertical pattern, contrast or brightness. If noise is present, change the PC output to another resolution, change the refresh rate to another rate or adjust the brightness and contrast on the [Picture] menu until the picture is clear.
- In PC mode, some resolution settings may not work properly depending on the graphics card.
- USB-C™ port charging and touch functionality may not operate depending on the connected device.
- When charging via USB-C™ type, an adapter of 100 W or higher and a secondary battery are required, and for fast charging, an adapter and cable of 140 W or higher must be used.

Using the built-in battery

This product has a built-in battery, allowing convenient use of the product with only the battery for a period of time without an additional power supply.

Battery status display

The remaining battery level is displayed as % on the upper right corner of the screen. In standby mode, it is displayed as a white/red LED when connected to the power cord.

Note

- The battery takes about 3 hours to fully charge in standby mode and about 3 hours 30 minutes while in use.
- The battery life and usage time after charging decrease in proportion to the period and duration of use of the product.
- Battery charging may not be possible at temperatures below 0 °C.
- Even when not in use, the remaining charge of the battery will naturally decrease.
- You can set battery protection mode using the bar at the top of the screen or the power button.
- For a longer battery life, charge the battery after using it for a certain period of time instead of keeping the battery fully charged.
- Keeping the battery level at 50 % helps extend battery life.
- The maximum usage time after charging is 4 hours 30 minutes.
- The standard usage time shown in this manual is based on measurements conducted by LG. Thus, the actual time may vary depending on usage.
- The usage time may vary depending on factors such as the device connected, operating temperature, period of use, and user settings.
- When the battery temperature rises, the product may turn off as a battery protection action.

Specifications

Power requirement	AC 100-240 V~ 50/60 Hz
Current Value / Power consumption	1.9 A / 190 W

Battery			
Type	Rechargeable Lithium Ion Battery	Rating	DC 15.52 V ⎓ / (9,279 mAh) (144 Wh)

Environment Condition			
Operating Temperature	0 °C to 40 °C	Storage Temperature	-20 °C to 60 °C
Operating Humidity	Less than 80 %	Storage Humidity	Less than 85 %

- Please refer to the labels on the head and stand connection surfaces for power usage, power consumption, and product information.

Product Information

Open Source Software Notice Information

To obtain the source code that is contained in this product, under GPL, LGPL, MPL, and other open source licenses that have the obligation to disclose source code, and to access all referred license terms, copyright notices, please visit *https://opensource.lge.com*.

LG Electronics will also provide open source code to you for a charge covering the cost of performing such distribution upon email request to opensource@lge.com.

This offer is valid to anyone in receipt of this information for a period of three years after our last shipment of this product.

Licenses

HDMI™
HIGH-DEFINITION MULTIMEDIA INTERFACE

HEVC Advance™
Covered by patents at patentlist.accessadvance.com

USB Type-C® and USB-C® are registered trademarks of USB Implementers Forum. USB 2.0 Type-C™ is a trademark of USB Implementers Forum.

Troubleshooting

In HDMI input, press the ⚙ button on the remote control three times to display the model name and serial number on the screen.

Cannot control the product with the remote control.	• Check the remote control sensor on the product and try again. • Check if there is any obstacle between the product and the remote control. • Check if the batteries are still working and properly installed (⊕ to ⊕, ⊖ to ⊖). • Replace depleted batteries with new ones. • For remote controls using coin batteries, verify that the insulation sheet between the battery and terminals has been removed.
No image display and no sound is produced.	• Check if the product is turned on. • Check if the power cord is connected to a wall outlet. • Check if there is a problem in the wall outlet by connecting other products. • The battery may be depleted; try connecting the power cord.
The product turns off suddenly.	• Check the power control settings. The power supply may be interrupted. • Check if the auto-off function is activated on the settings related time. • If there is no signal while the product is on, the product will turn off automatically after 4 hours of inactivity. • If the battery overheats, the product automatically turns off to protect itself.
When connecting to the PC (HDMI), no signal is detected.	• Turn the product off/on using the remote control. • Reconnect the HDMI cable. • Restart the PC with the product on.
Abnormal Display	• If the product feels cold to the touch, there may be a small "flicker" when it is turned on. This is normal, there is nothing wrong with product. • This panel is an advanced product that contains millions of pixels. You may see tiny black dots and/or brightly coloured dots (red, blue or green) at a size of 1 ppm on the panel. This does not indicate a malfunction and does not affect the performance and reliability of the product. This phenomenon also occurs in third-party products and is not subject to exchange or refund. • You may find different brightness and colour of the panel depending on your viewing position(left/right/top/down). This phenomenon occurs due to the characteristic of the panel. It is not related with the product performance, and it is not malfunction. • Avoid touching the screen or holding your finger(s) against it for long periods of time. Doing so may produce some temporary distortion effects on the screen. • Displaying a still image for a prolonged period of time may cause image sticking. Avoid displaying a fixed image on the product screen for a long period of time.
Generated Sound	• **"Cracking" noise**: A cracking noise that occurs when watching or turning off the product is generated by plastic thermal contraction due to temperature and humidity. This noise is common for products where thermal deformation is required. • **Electrical circuit humming/panel buzzing**: A low level noise is generated from a high-speed switching circuit, which supplies a large amount of current to operate a product. It varies depending on the product. This generated sound does not affect the performance and reliability of the product.

- Using the product in a dusty environment may cause the screen to become dim.
- In the case of abnormal operation, turn the battery switch off, unplug the power cord, and then plug it back in.
- In the case of abnormal operation, either disconnect and reconnect the power cord or perform a force restart by pressing and holding the power button.

⚠

- When cleaning the product, be careful not to allow any liquid or foreign objects to enter the gap between the upper, left or right side of the panel and the guide panel. (Depending on model)
- Make sure to wring any excess water or cleaner from the cloth.
- Do not spray water or cleaner directly onto the product screen.
- Make sure to spray just enough of water or cleaner onto a dry cloth to wipe the screen.

Using Remote Control

Short press

Basic Guide

	Power: Turns the product On or Off.
	Turns on the most recently set theme in **Mood Maker**.
	Mutes all sounds.
	Move to the **Previous Step**.
	Displays the **Home Menu**.
	Displays the **Quick Settings Menu**.
	Up, Down, Left, Right Navigation buttons.
❶	Various content service buttons.

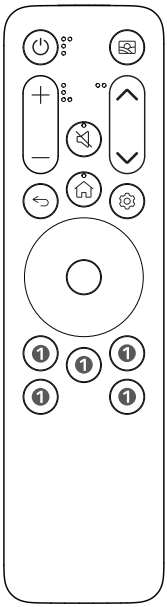

Long press

Extension Guide

	Accesses the **Accessibility Shortcuts**.
	Closes the current app and goes to the **Home Menu**.
	To enable the **Screen Zoom**.
	Displays the **All Settings Menu**.

+ / —	Push up and down to **Adjust the Volume**.
∧ / ∨	Push up and down to **Change Programmes**.

(Some buttons and services may not be provided depending on models or regions.)

Note

**** To use the button, press and hold for more than 1 second.**

- The features can be used without the remote control by touching the screen.
- Please keep the battery out of the reach of children. It may cause injury or malfunction.
- Ensure the battery is properly mounted. There is a risk of fire or explosion.
- The remote control using a coin battery can be attached to the top of the product. The remote control can be conveniently mounted on the product or any magnetic surface using its built-in magnet.
  - Only attach the remote control to the top of the product. The remote control may fall if attached to the sides or bottom.
  - The remote control using a standard battery cannot be magnetically attached.