LG

MFL72139705241 2REV00

OLED55G5*
OLED65G5* OLED83G5*
OLED77G5* OLED97G5*





www.lg.com
Printed in Korea
Imprimé en Corée

x 1

55"*A/65"*A
55"*W/65"*W
77/83/97"

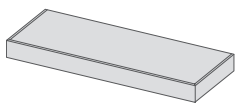

55/65/77/83"
X 1
97"
X 4

55"*B/65"*B

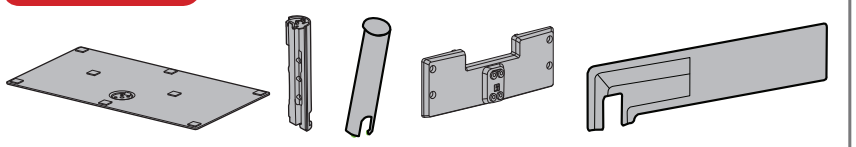

ⓐ x 4 (M4 x L20)

ⓑ x 8 (M5 x L14)

55/77" 65"*A/65"*W

1

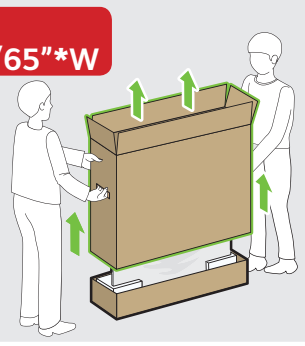

83/97"

1

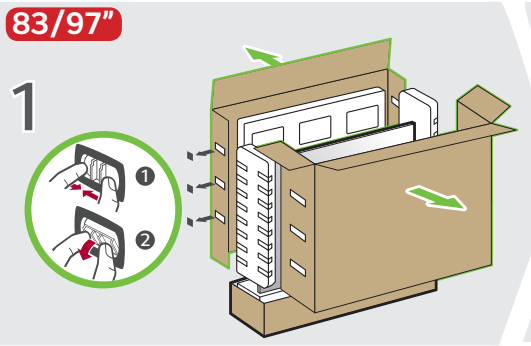

55/77/83/97" 65"*A/65"*W

2

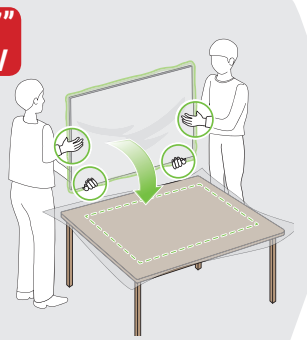

3

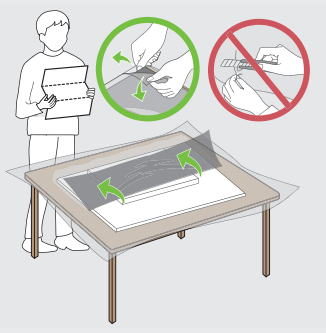

65"*B

1

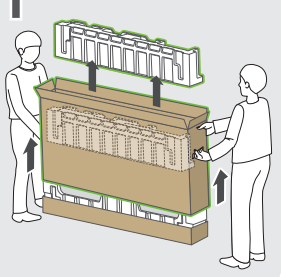

2

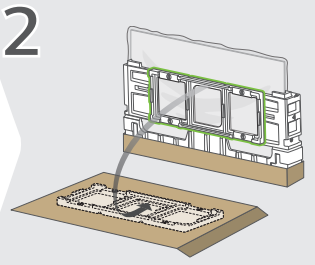

3

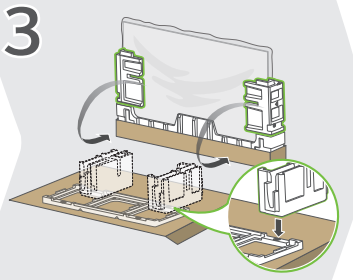

4

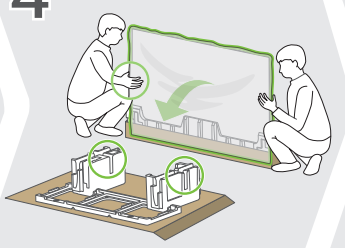

5

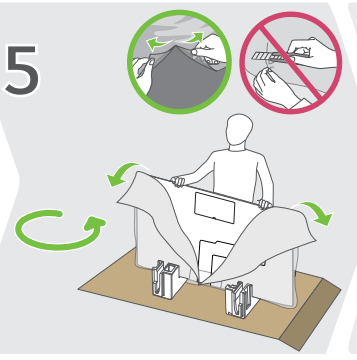

6

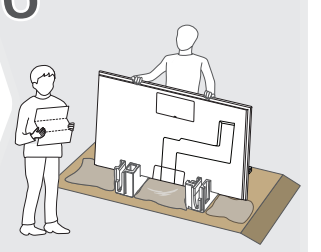

55"*A/55"*W/65"*A/65"*W

1

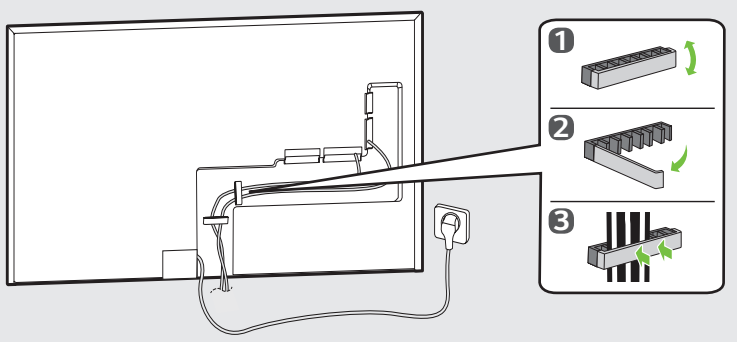

55"*B/65"*B

1

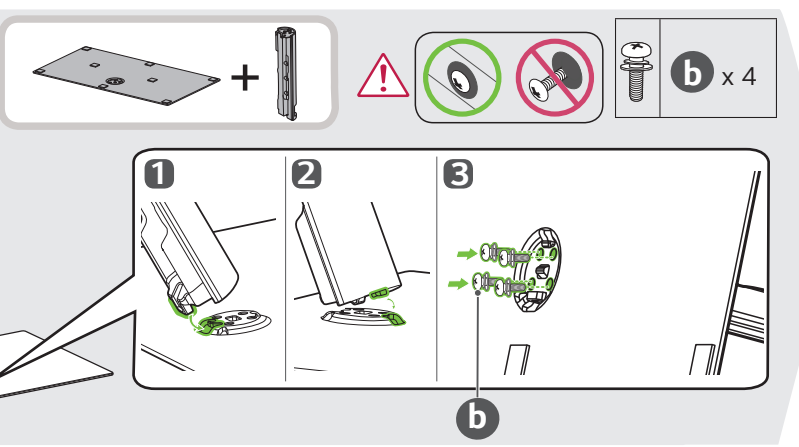

2

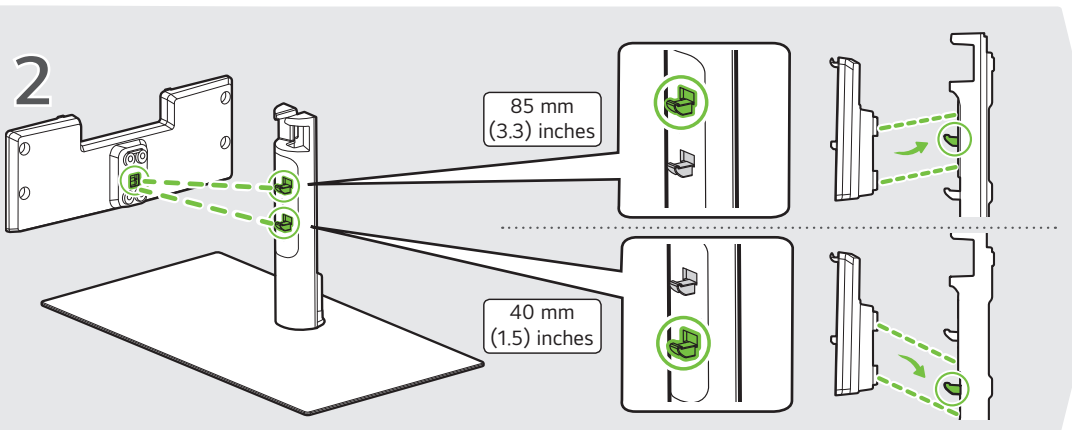

3

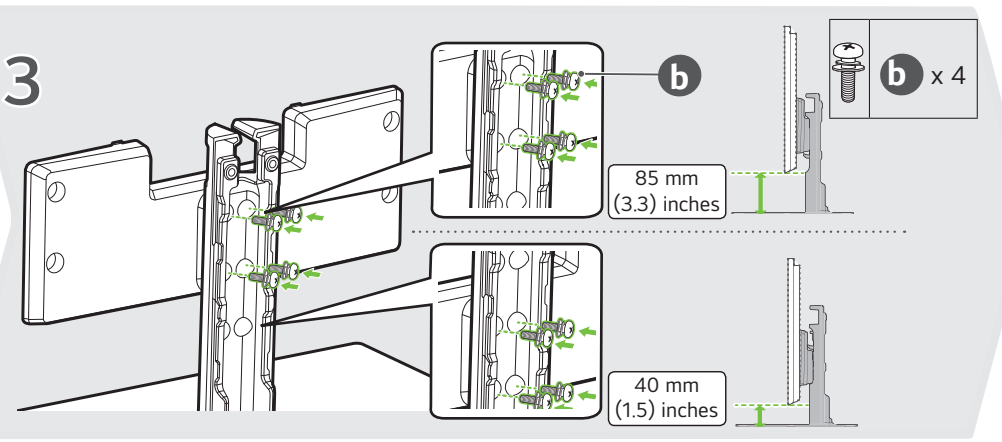

55"*B

4

5

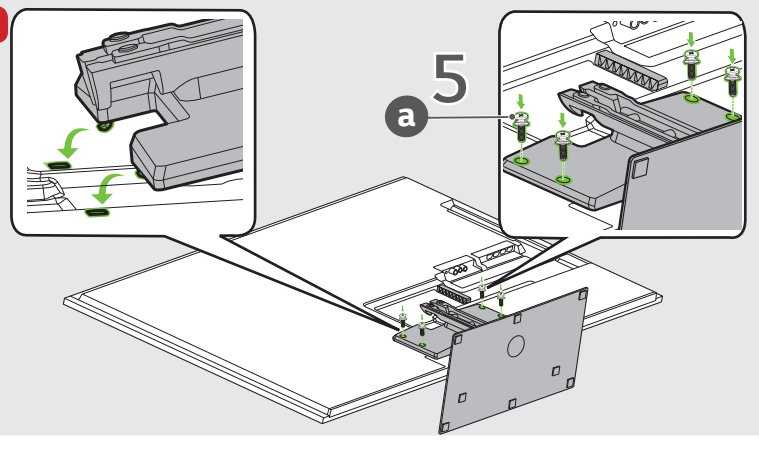

ⓐ x 4

65"*B

4

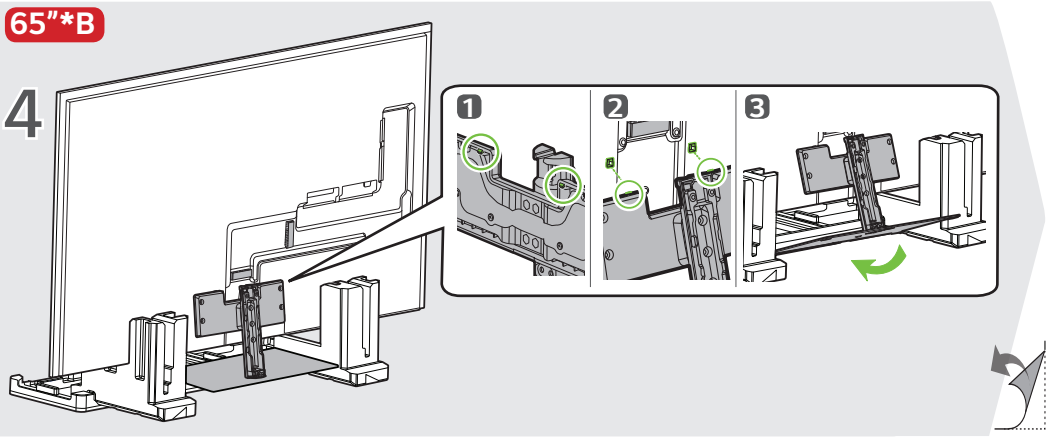

65"*B

5

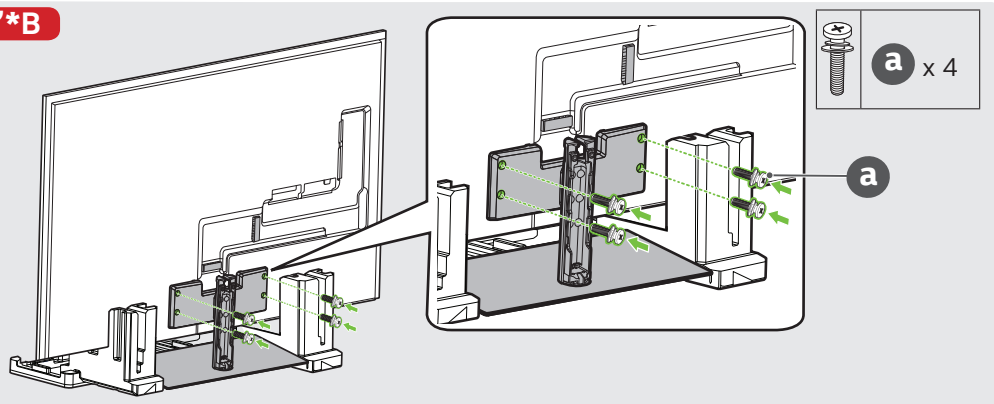

55"*B/65"*B

6

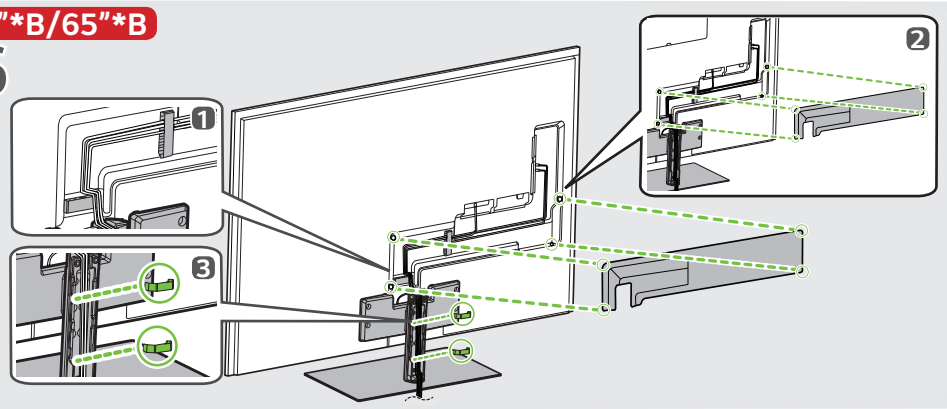

55"*B/65"*B

7

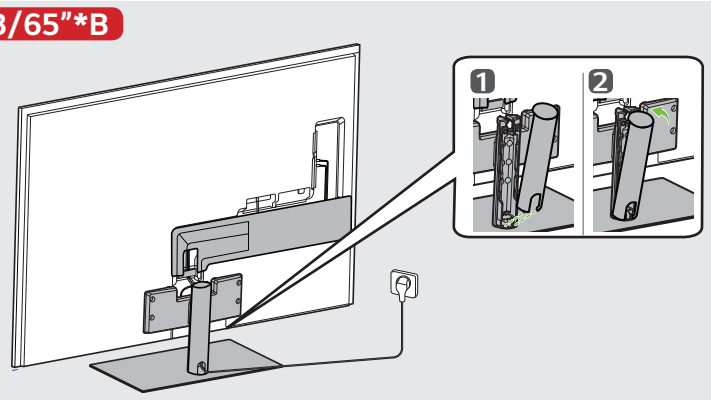

77/83/97"

1

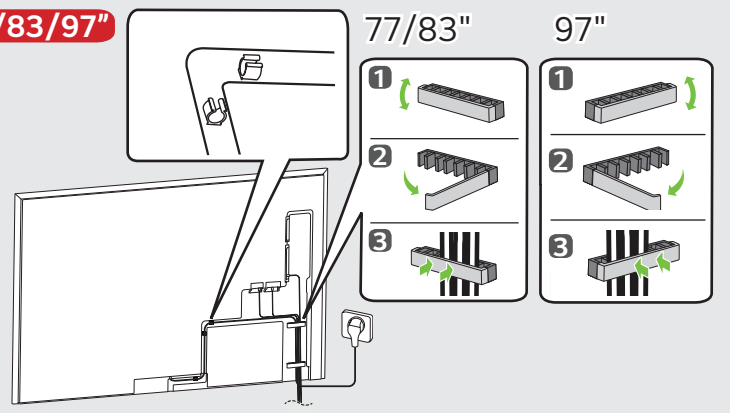

55/65/77/83/97"

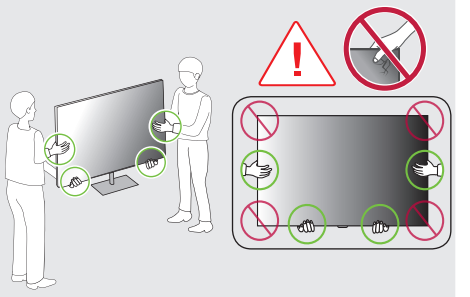

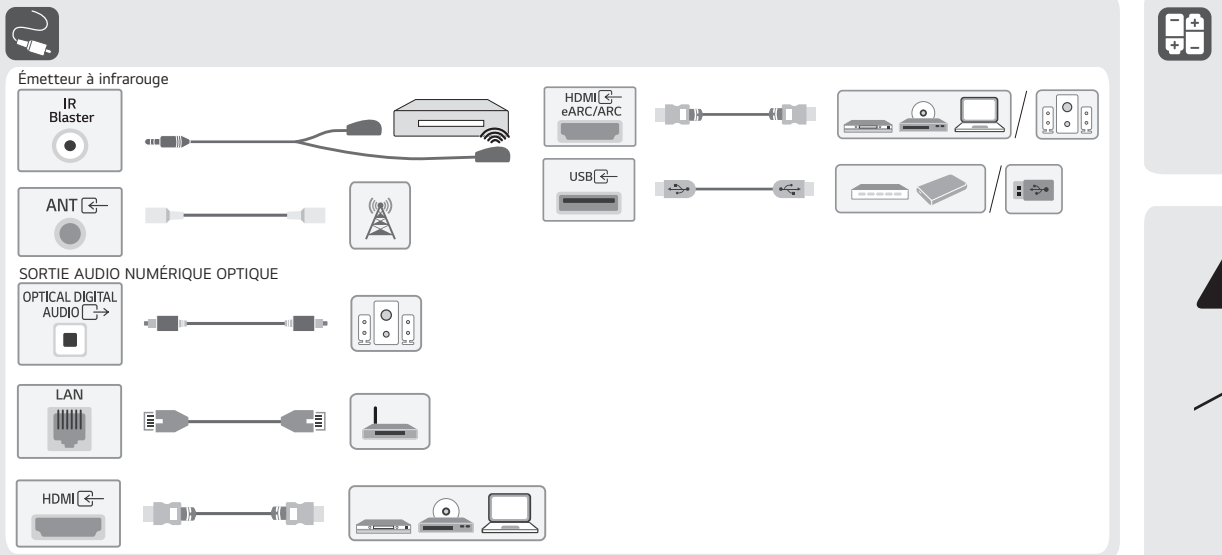

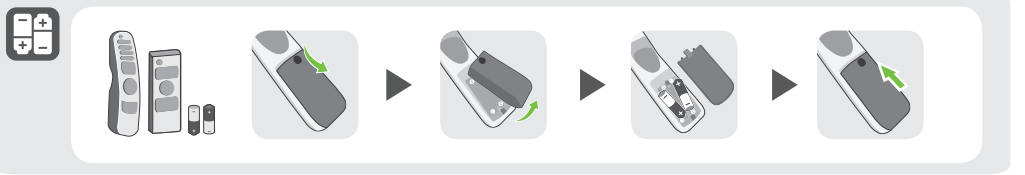

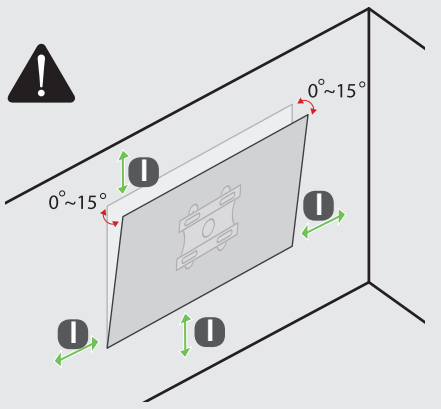

mm (inches / pulgadas / po)

I	
OLED55G5*	100 mm (3.9) inches
OLED65G5*	
OLED77G5*	
OLED83G5*	
OLED97G5*	300 mm (11.8) inches

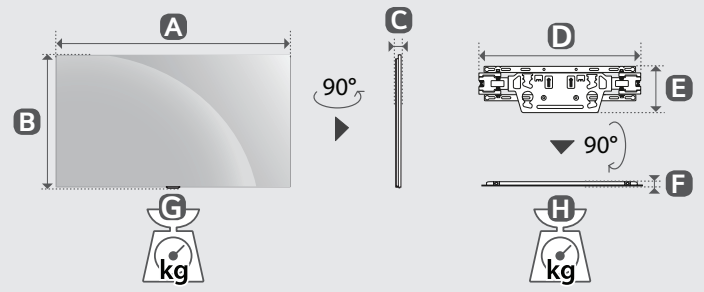

mm (inches / pulgadas / po)
kg (lbs / libras / lb)

	A	B	C	D	E	F	G	H	
OLED55G5*A **OLED55G5*W**	1 222 mm (48.1) inches	703 mm (27.6) inches	27.2 mm (1.0) inches	452 mm (17.7) inches	129 mm (5.0) inches	13 mm (0.5) inches	16.8 kg (37.0) lbs	1.2 kg (2.6) lbs	340 W
OLED65G5*A **OLED65G5*W**	1 441 mm (56.7) inches	826 mm (32.5) inches	24.3 mm (0.9) inches	452 mm (17.7) inches	129mm (5.0) inches	13 mm (0.5) inches	22 kg (48.5) lbs	1.2 kg (2.6) lbs	452 W
OLED77G5*	1 712 mm (67.4) inches	982 mm (38.6) inches	24.8 mm (0.9) inches	452 mm (17.7) inches	129mm (5.0) inches	13 mm (0.5) inches	33.6 kg (74.0) lbs	1.2 kg (2.6) lbs	663 W
OLED83G5*	1 847 mm (72.7) inches	1 057 mm (41.6) inches	28 mm (1.1) inches	452 mm (17.7) inches	129 mm (5.0) inches	13 mm (0.5) inches	39.0 kg (85.9) lbs	1.2 kg (2.6) lbs	727 W

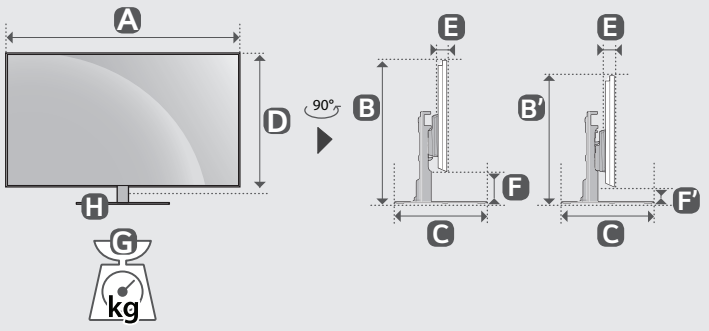

	A	B / B'	C	D	E	F / F'	G	G-H	
OLED55G5*B	1 222 mm (48.1) inches	787 / 742 mm (30.9 / 29.2) inches	263 mm (10.3) inches	703 mm (27.6) inches	27.2 mm (1.0) inches	85 / 40 mm (3.3 / 1.5) inches	22.1 kg (48.7) lbs	16.8 kg (37.0) lbs	340 W
OLED65G5*B	1 441 mm (56.7) inches	910 / 865 mm (35.8 / 34.0) inches	263 mm (10.3) inches	826 mm (32.5) inches	24.3 mm (0.9) inches	85 / 40 mm (3.3 / 1.5) inches	27.3 kg (60.1) lbs	22 kg (48.5) lbs	452 W

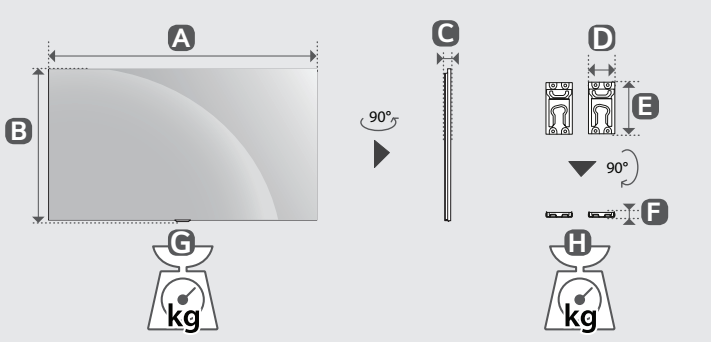

	A	B	C	D	E	F	G	H	
OLED97G5*	2 155 mm (84.8) inches	1 230 mm (48.4) inches	28.2 mm (1.1) inches	134.8 mm (5.3) inches	254 mm (10) inches	16 mm (0.6) inches	57 kg (125.6) lbs	2.8 kg (6.1) lbs	1064 W

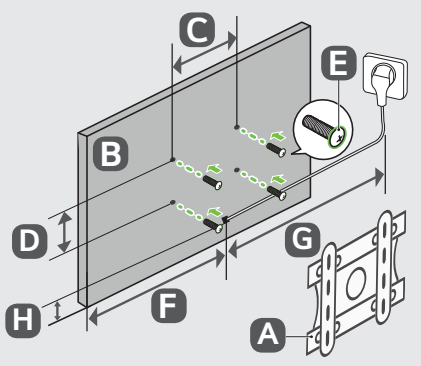

mm (inches / pulgadas / po)

A	B	C x D (mm)	E	F (mm)	G (m)	H (mm)
OLW480B	**OLED55G5***	300 x 200 mm (11.8 x 7.8) inches	M6	544 mm (21.4) inches	≧1.5 m (59.0) inches	56 mm (2.2) inches
WB24GCB	**OLED65G5***	300 x 300 mm (11.8 x 11.8) inches		654 mm (25.7) inches		56 mm (2.2) inches
	OLED77G5*			856 mm (33.7) inches		57 mm (2.2) inches
WB24GCB	**OLED83G5***	400 x 400 mm (15.7 x 15.7) inches		924 mm (36.3) inches		59 mm (2.3) inches
WB24GDB	**OLED97G5***	600 x 400 (23.6 x 15.7) inches	M8	943 mm (37.1) inches		142 mm (5.5) inches

* : 0~9, A~Z