LG

MFL058267012507REV00

43UA73* 43UA77* 75UA75* 86UA71*
50UA73* 50UA77* 75UA77* 86UA75* 86UA80*
55UA73* 55UA77* 75UA84* 86UA77* 86UA84*
65UA73* 65UA77* 75UA85* 86UA79* 86UA85*

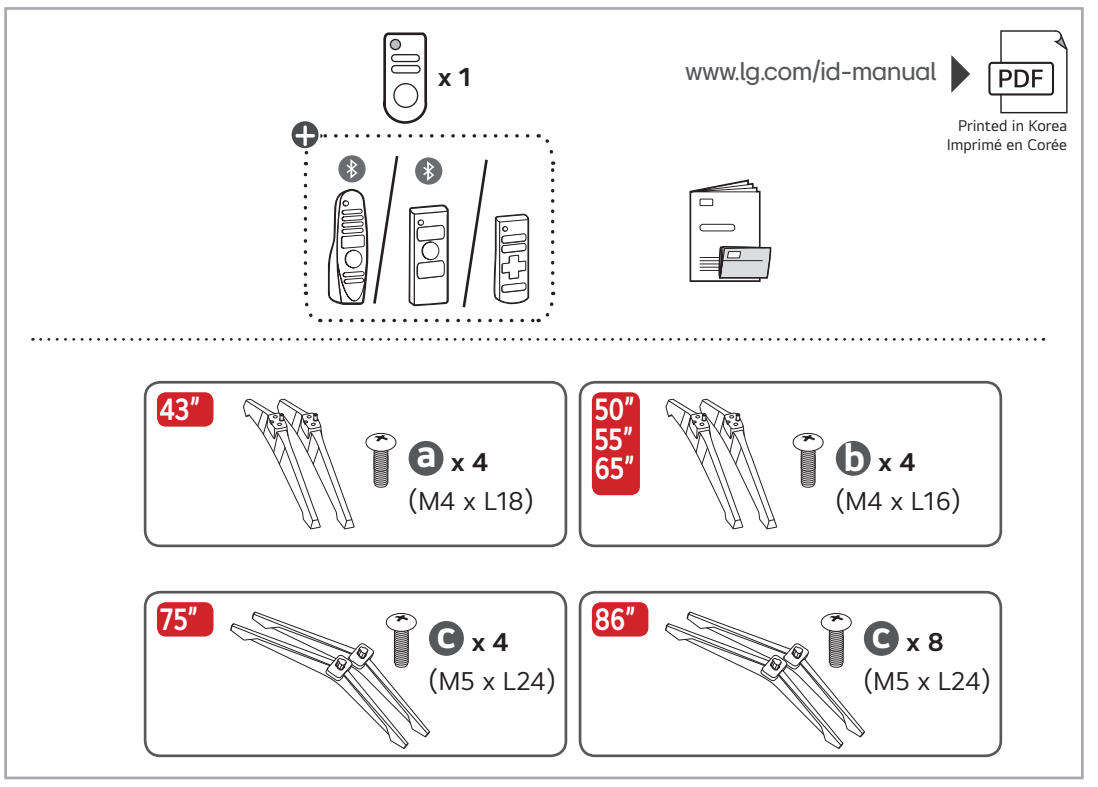

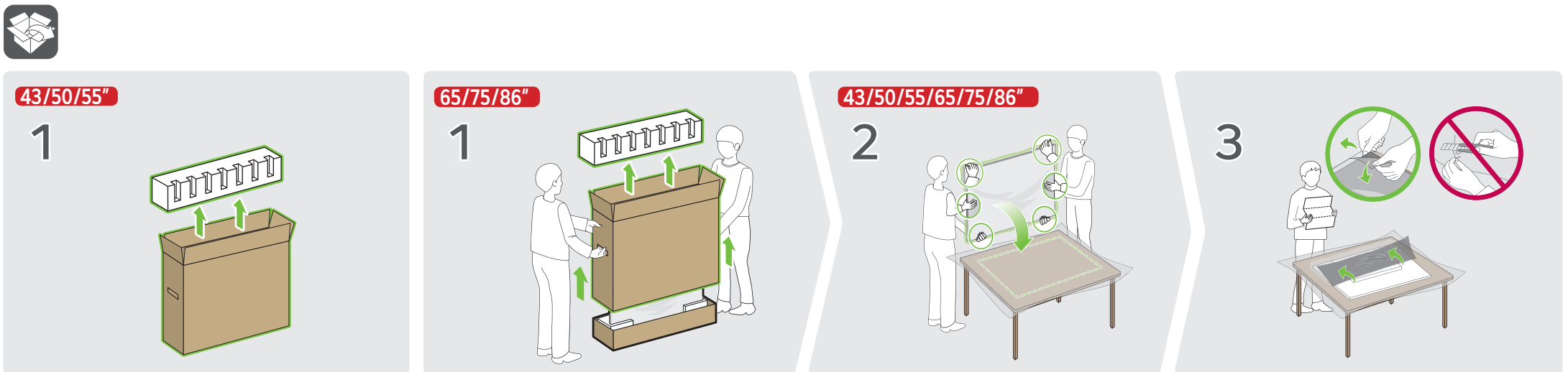

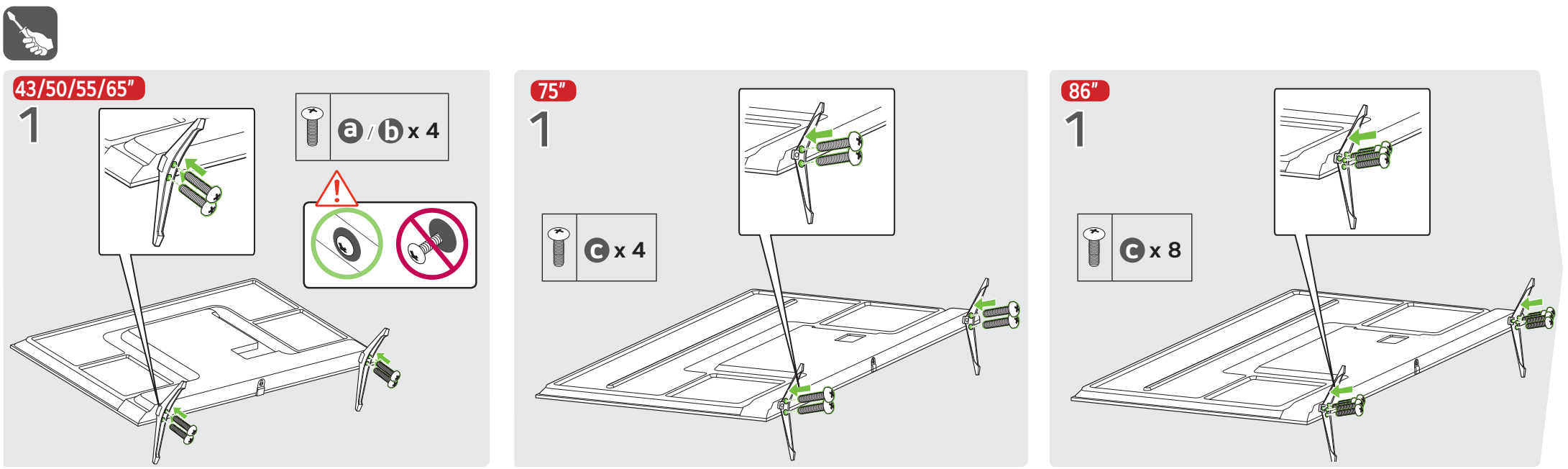

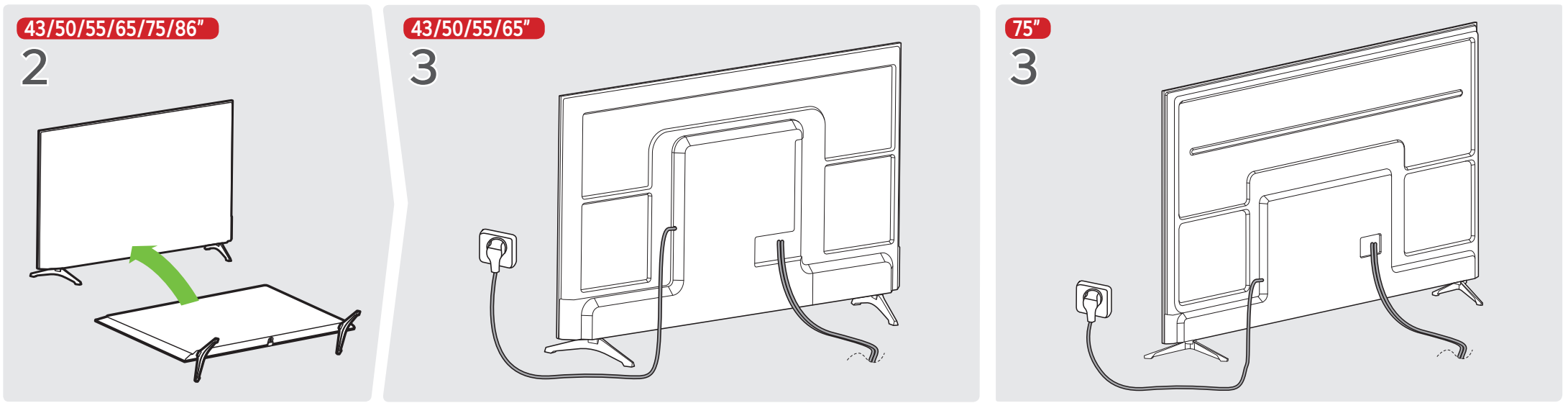

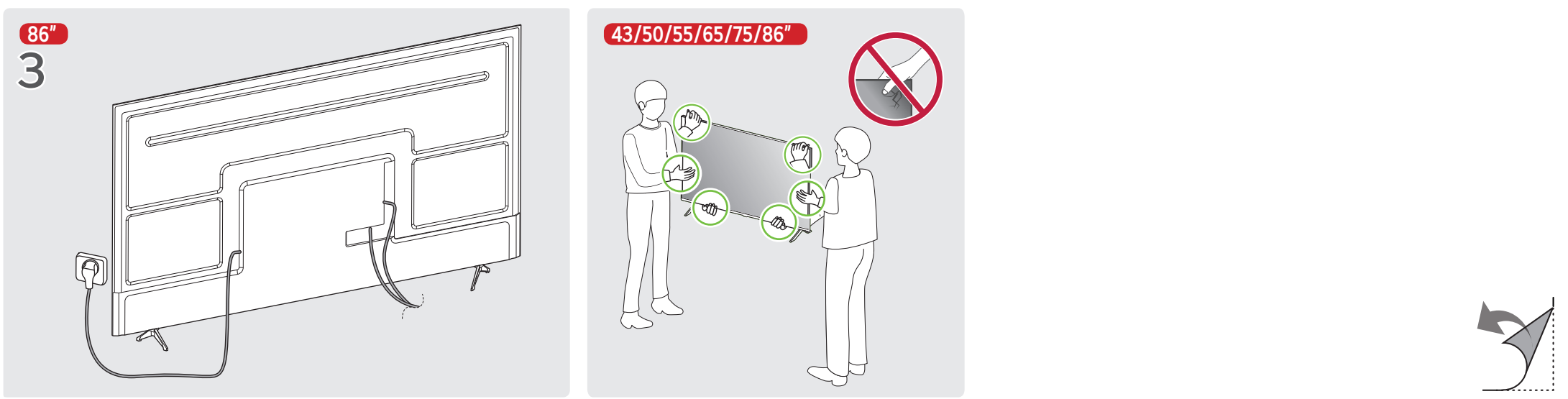

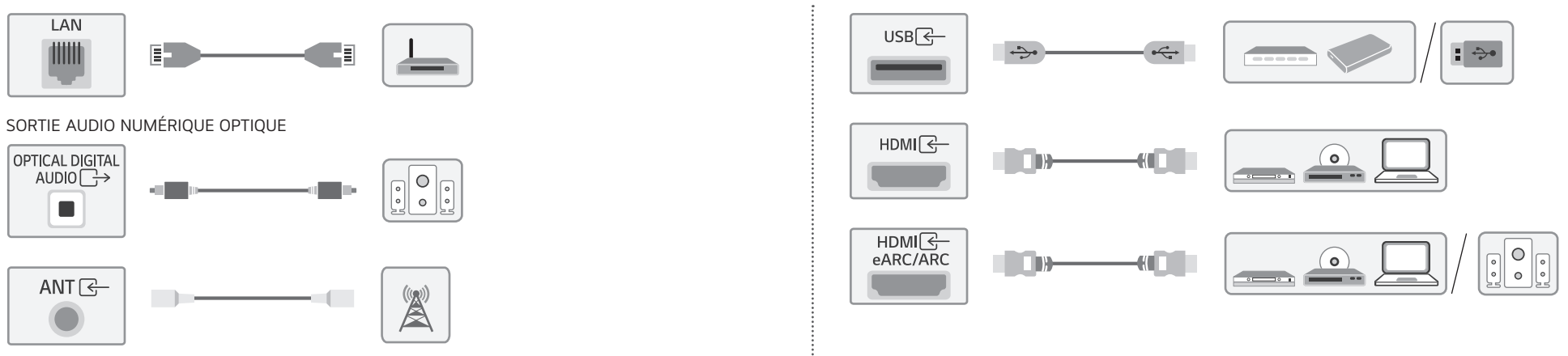

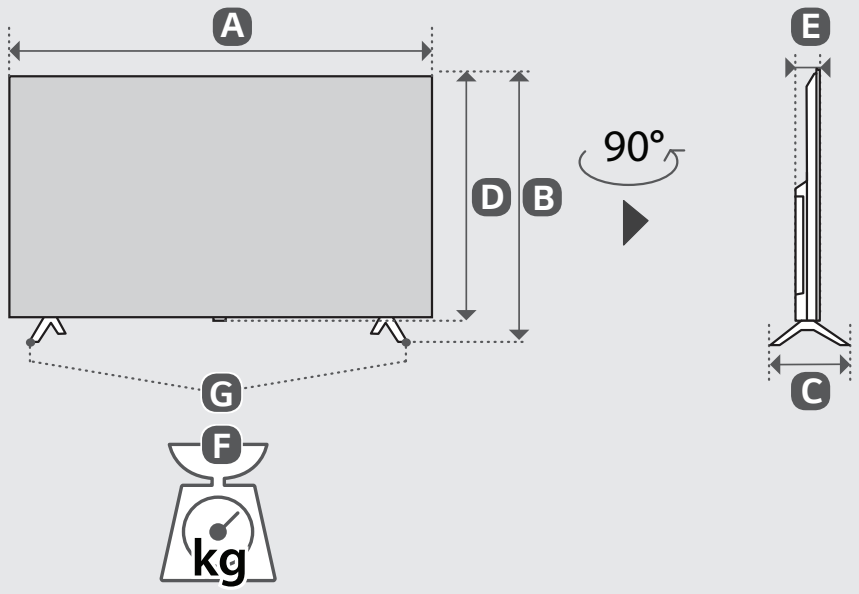

mm (inches / pulgadas / po)
kg (lbs / libras / lb)

	A	B	C	D	E	F	F - G	
43UA73* 43UA77*	957 mm (37.6) inches	607 mm (23.8) inches	237 mm (9.3) inches	559 mm (22.0) inches	58.3 mm (2.2) inches	6.2 kg (13.6) lbs	6.1 kg (13.4) lbs	105 W
50UA73* 50UA77*	1 111 mm (43.7) inches	700 mm (27.5) inches	275 mm (10.8) inches	645 mm (25.3) inches	59.8 mm (2.3) inches	8.5 kg (18.7) lbs	8.3 kg (18.2) lbs	116 W
55UA73* 55UA77*	1 226 mm (48.2) inches	766 mm (30.1) inches	275 mm (10.8) inches	711 mm (27.9) inches	59.8 mm (2.3) inches	10.5 kg (23.1) lbs	10.3 kg (22.7) lbs	136 W
65UA73* 65UA77*	1 446 mm (56.9) inches	894 mm (35.1) inches	309 mm (12.1) inches	834 mm (32.8) inches	59.9 mm (2.3) inches	14.7 kg (32.4) lbs	14.5 kg (31.9) lbs	157 W
75UA75* 75UA77* 75UA84* 75UA85*	1 668 mm (65.6) inches	1 031 mm (40.5) inches	344 mm (13.5) inches	960 mm (37.7) inches	59.8 mm (2.3) inches	24 kg (52.9) lbs	23.5 kg (51.8) lbs	201 W
86UA71* 86UA75* 86UA77* 86UA79* 86UA80* 86UA84* 86UA85*	1 920 mm (75.5) inches	1 182 mm (46.5) inches	413 mm (16.2) inches	1 102 mm (43.3) inches	59.8 mm (2.3) inches	34.2 kg (75.3) lbs	33.6 kg (74.0) lbs	226 W

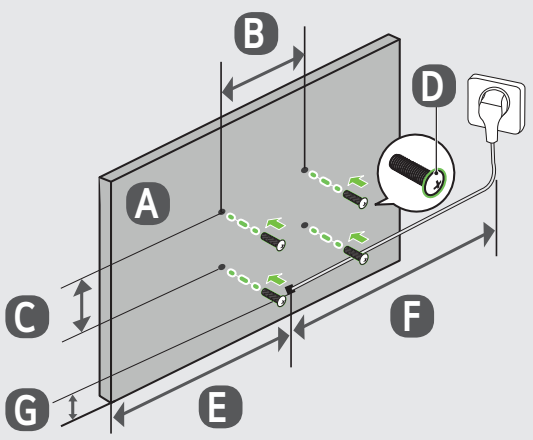

A	B x C	D	E	F	G
43UA73* 43UA77*	200 x 300 mm (7.8 x 11.8) inches	M6	296 mm (11.6) inches	≥1.5 m (59.0) inches	226 mm (8.8) inches
50UA73* 50UA77*			373 mm (14.6) inches		226 mm (8.8) inches
55UA73* 55UA77*			409 mm (16.1) inches		250 mm (9.8) inches
65UA73* 65UA77*			519 mm (20.4) inches		250 mm (9.8) inches
75UA75* 75UA77* 75UA84* 75UA85*	300 x 300 mm (11.8 x 11.8) inches		484 mm (19.0) inches		172 mm (6.7) inches
86UA71* 86UA75* 86UA77* 86UA79* 86UA80* 86UA84* 86UA85*	400 x 400 mm (15.7 x 15.7) inches	M8	595 mm (23.4) inches		294 mm (11.5) inches

* : 0~9, A~Z
mm (inches / pulgadas / po)

ENGLISH

www.lg.com

Copyright © 2025 LG Electronics Inc.
All Rights Reserved.

LED TV*

OWNER'S MANUAL

Safety and Reference

* LG LED TV applies LCD screen with LED backlights.

Please read this manual carefully before operating your set and retain it for future reference.

The model and serial number of the product are located on the back and on one side of the product. Record them below in case you ever need service.

Model _____

Serial No. _____

MFL058242042507REV00

Before reading this manual

- Read this manual thoroughly before operating your TV, and keep it for future reference.
- On the website you can download the manual including installation, using, troubleshooting, specifications, license etc and view its contents on your PC or mobile device.
- **User Guide :** For more information about this TV, read the USER GUIDE embedded in the product. (Depending on model)
  - To open the USER GUIDE ⚙ → [⚙] → [Support] → [User Guide]

Separate Purchase

- Separate purchase items can be changed or modified for quality improvement without any notification. Contact your dealer to buy these items. These devices only work with certain models.
- The model name or design may be changed depending on the upgrade of product functions, manufacturer's circumstances or policies.
- Magic Remote Control :
  Check whether your TV model supports Bluetooth in the Wireless Module Specification to verify whether it can be used with the Magic Remote.
- A cable to connect antennas and external devices must be purchased separately.

Note

- Product specifications or contents of this manual may be changed without prior notice due to upgrade of product functions.
- The items supplied with your product may vary depending on the model.
- Image shown may differ from your TV.

Warning! Safety instructions

CAUTION
RISK OF ELECTRIC SHOCK
DO NOT OPEN

CAUTION : TO REDUCE THE RISK OF ELECTRIC SHOCK, DO NOT REMOVE COVER (OR BACK). NO USER-SERVICEABLE PARTS INSIDE. REFER TO QUALIFIED SERVICE PERSONNEL.

This symbol is intended to alert the user to the presence of uninsulated "dangerous voltage" within the product's enclosure that may be of sufficient magnitude to constitute a risk of electric shock to persons.

This symbol is intended to alert the user to the presence of important operating and maintenance (servicing) instructions in the literature accompanying this apparatus.

WARNING : TO REDUCE THE RISK OF FIRE AND ELECTRIC SHOCK, DO NOT EXPOSE THIS PRODUCT TO RAIN OR MOISTURE.

- TO PREVENT THE SPREAD OF FIRE, KEEP CANDLES OR OTHER ITEMS WITH OPEN FLAMES AWAY FROM THIS PRODUCT AT ALL TIMES.
- **Do not place the TV and/or remote control in the following environments:**
  - Keep the product away from direct sunlight.
  - An area with high humidity such as a bathroom.
  - Near any heat source such as stoves and other devices that produce heat.
  - Near kitchen counters or humidifiers where they can easily be exposed to steam or oil.
  - An area exposed to rain or wind.
  - Do not expose to dripping or splashing and do not place objects filled with liquids, such as vases, cups, etc. on or over the apparatus (e.g., on shelves above the unit).
  - Near flammable objects such as gasoline or candles, or expose the TV to direct air conditioning.
  - Do not install in excessively dusty places.

  Otherwise, this may result in fire, electric shock, combustion/explosion, malfunction or product deformation.
- **Ventilation**
  - Install your TV where there is proper ventilation. Do not install in a confined space such as a bookcase.
  - Do not install the product on a carpet or cushion.
  - Do not block or cover the product with cloth or other materials while unit is plugged in.
- Take care not to touch the ventilation openings. When watching the TV for a long period, the ventilation openings may become hot.

- Protect the power cord from physical or mechanical abuse, such as being twisted, kinked, pinched, closed in a door, or walked upon. Pay particular attention to plugs, wall outlets, and the point where the cord exits the device.
- Do not move the TV whilst the Power cord is plugged in.
- Do not use a damaged or loosely fitting power cord.
- Be sure to grasp the plug when unplugging the power cord. Do not pull on the power cord to unplug the TV.
- Do not connect too many devices to the same AC power outlet as this could result in fire or electric shock.
- **Disconnecting the Device from the Main Power**
  - The power plug is the disconnecting device. In case of an emergency, the power plug must remain readily accessible.
- Do not let your children climb or cling onto the TV. Otherwise, the TV may fall over, which may cause serious injury.
- **Outdoor Antenna Grounding** (Can differ by country):
  - If an outdoor antenna is installed, follow the precautions below. An outdoor antenna system should not be located in the vicinity of overhead power lines or other electric light or power circuits, or where it can come in contact with such power lines or circuits as death or serious injury can occur.
- Never touch this apparatus or antenna during a lightning storm. You may be electrocuted.
- Make sure the power cord is connected securely to the TV and wall socket if not secured damage to the Plug and socket may occur and in extreme cases a fire may break out.
- Do not insert metallic or inflammable objects into the product. If a foreign object is dropped into the product, unplug the power cord and contact the customer service.
- Do not touch the end of the power cord while it is plugged in. You may be electrocuted.
- **If any of the following occur, unplug the product immediately and contact your local customer service.**
  - The product has been damaged.
  - If water or another substance enters the product (like an AC adapter, power cord, or TV).
  - If you smell smoke or other odors coming from the TV.
  - When lightning storms or when unused for long periods of time.

  Even the TV is turned off by remote control or button, AC power source is connected to the unit if not unplugged in.
- Do not use high voltage electrical equipment near the TV (e.g., a bug zapper). This may result in product malfunction.
- Do not attempt to modify this product in any way without written authorisation from LG Electronics. Accidental fire or electric shock can occur. Contact your local customer service for service or repair. Unauthorised modification could void the user's authority to operate this product.
- Use only an authorised attachments / accessories approved by LG Electronics. Otherwise, this may result in fire, electric shock, malfunction, or product damage.
- Never disassemble the AC adapter or power cord. This may result in fire or electric shock.
- Handle the adapter carefully to avoid dropping or striking it. An impact could damage the adapter.
- To reduce the risk of fire or electrical shock, do not touch the TV with wet hands. If the power cord prongs are wet or covered with dust, dry the power plug completely or wipe dust off.
- **Batteries**
  - Store the accessories (battery, etc.) in a safe location out of the reach of children.
  - Do not short circuit, disassemble, or allow the batteries to overheat. Do not dispose of batteries in a fire. Batteries should not be exposed to excessive heat.
  - Caution : Risk of fire or explosion if the battery is replaced by an incorrect type.

- **Moving**
  - When moving, make sure the product is turned off, unplugged, and all cables have been removed. It may take 2 or more people to carry larger TVs. Do not press or put stress on the front panel of the TV. Otherwise, this may result in product damage, fire hazard or injury.
- Keep the packing anti-moisture material or vinyl packing out of the reach of children.
- Do not allow an impact shock, any objects to fall into the product, and do not drop anything onto the screen.
- Do not press strongly upon the panel with a hand or a sharp object such as a nail, pencil, or pen, or make a scratch on it. It may cause damage to screen.
- **Cleaning**
  - When cleaning, unplug the power cord and wipe gently with a soft/ dry cloth. Do not spray water or other liquids directly on the TV. Do not clean your TV with chemicals including glass cleaner, any type of air freshener, insecticide, lubricants, wax (car, industrial), abrasive, thinner, benzene, alcohol etc., which can damage the product and/ or its panel. Otherwise, this may result in electric shock or product damage.

Installation

Lifting and moving the TV

Please note the following advice to prevent the TV from being scratched or damaged and for safe transportation regardless of its type and size.

- It is recommended to move the TV in the box or packing material that the TV originally came in.
- Before moving or lifting the TV, disconnect the power cord and all cables.
- When holding the TV, the screen should face away from you to avoid damage.
- Hold the top and bottom of the TV frame firmly. Make sure not to hold the transparent part, speaker, or speaker grill area.
- When transporting a large TV, there should be at least 2 people.
- When transporting the TV, do not expose the TV to jolts or excessive vibration.
- When transporting the TV, keep the TV upright, never turn the TV on its side or tilt towards the left or right.
- Do not apply excessive pressure to cause flexing / bending of frame chassis as it may damage screen.
- When handling the TV, be careful not to damage the protruding buttons.

⚠

- Avoid touching the screen at all times, as this may result in damage to the screen.
- When attaching the stand to the TV set, place the screen facing down on a cushioned table or flat surface to protect the screen from scratches.

Mounting on the Table

1 Lift and tilt the TV into its upright position on a table.
   - Leave a 10 cm (minimum) space from the wall for proper ventilation.

2 Connect the power cord to a wall outlet.

⚠

- Do not apply foreign substances (oils, lubricants, etc.) to the screw parts when assembling the product. (Doing so may damage the product.)
- Do not use any unapproved items to ensure the safety and product life span.
- Any damage or injuries caused by using unapproved items are not covered by the manufacturer's warranty.
- If you install the TV on a stand, you need to take actions to prevent the product from overturning. Otherwise, the product may fall over, which may cause injury.
- When assembling the stand, ensure that all of the provided screws are attached. If the screws are not fully tightened, the product may tilt or tip over, resulting in damage. Tightening the screws with excessive force may cause them to come off due to abrasion of the screw joint.
- If a television is not positioned in a sufficiently stable location, it can be potentially hazardous due to falling. Many injuries, particularly to children, can be avoided by taking simple precautions such as:
  - Using cabinets or stands recommended by the manufacturer of the television.
  - Only using furniture that can safely support the television.
  - Ensuring the television is not overhanging the edge of the supporting furniture.
  - Not placing the television on tall furniture (for example, cupboards or bookcases) without anchoring both the furniture and the television to a suitable support.
  - Not standing the televisions on cloth or other materials placed between the television and supporting furniture.
  - Educating children about the dangers of climbing on furniture to reach the television or its controls.

Securing TV to the Wall

1 Insert and tighten the eye-bolts, or TV brackets and bolts on the back of the TV.
   - If there are bolts inserted at the eye-bolts position, remove the bolts first.

2 Mount the wall brackets with the bolts to the wall. Match the location of the wall bracket and the eye-bolts on the rear of the TV.

3 Connect the eye-bolts and wall brackets tightly with a sturdy rope. Make sure to keep the rope horizontal with the flat surface.

- Use a platform or cabinet that is strong and large enough to support the TV securely.
- Brackets, bolts and ropes are not provided. You can obtain additional accessories from your local dealer.

Mounting to the Wall

Attach an optional wall mount bracket at the rear of the TV carefully and install the wall mount bracket on a solid wall perpendicular to the floor. When you attach the TV to other building materials, please contact qualified personnel. LG recommends that wall mounting be performed by a qualified professional installer. Please use a wall mount bracket where the device is adequately secured to the wall with enough space to allow connectivity to external devices. It is advised to connect all the cables before installing fixed wall mounts.

⚠

- Remove the stand before installing the TV on a wall mount by performing the stand attachment in reverse.
- For more information of screws and wall mount bracket, refer to manual included in the separately purchased wall mount.
- If you intend to mount the product to a wall, attach VESA standard mounting interface (optional parts) to the back of the product. When you install the set to use the wall mounting bracket (optional parts), fix it carefully so as not to drop.
- When mounting a TV on the wall, make sure not to install the TV by hanging the power and signal cables on the back of the TV.
- Do not install this product on a wall if it could be exposed to oil or oil mist. This may damage the product and cause it to fall.
- When installing the wall mounting bracket, it is recommended to cover the stand hole using tape, in order to prevent the influx of dust and insects. (Depending on model)

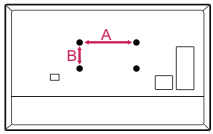

Model	75UA85*	86UA85*
VESA (A x B) (mm)	300 x 300	400 x 400
Standard screw	M6	M8
Number of screws	4	4
Wall mount bracket (optional)	Buy a suitable wall mount kit in the market by referring to this table for each model.	

Antenna/Cable

Connect the TV to a wall antenna socket with an RF cable (75 Ω).

- Use a signal splitter to use more than 2 TVs.
- If the image quality is poor, install a signal amplifier properly to improve the image quality.
- If the image quality is poor with an antenna connected, try to realign the antenna in the correct direction.
- An antenna cable and converter are not supplied.
- For a location that is not supported with Ultra HD broadcasting, this TV cannot receive Ultra HD broadcasts directly. (Depending on model)

Satellite dish

Connect the TV to a satellite dish to a satellite socket with a satellite RF cable (75 Ω). (Depending on model)

Starting TV

Turning on the TV

You can simply operate the TV functions, using the button.

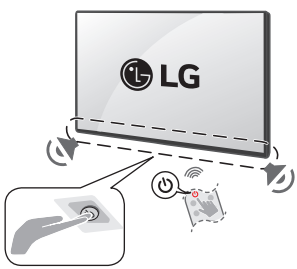

Power On (Press)
Power Off[1] (Press and Hold)
Menu Control (Press[2])
Menu Selection (Press and Hold[3])

1) All running apps will close, and any recording in progress will stop. (Depending on country)
2) You can access and adjust the menu by pressing the button when TV is on.
3) You can use the function when you access menu control.

Note

- If the TV is turned on for the first time after it was shipped from the factory, initialization of the TV may take a few minutes.
- Your TV's OSD (On Screen Display) may differ slightly from that shown in this manual.
- The device must be easily accessed to a location outlet near the access. Some devices are not made by turning on / off button, turning off the device and unplugging the power cord.
- You need to enable easy access for connecting and disconnecting electric cables fed from the mains.

Connections

Connect various external devices to the TV and switch input modes to select an external device. For more information of external device's connection, refer to the manual provided with each device.

HDMI

- When connecting the HDMI cable, the product and external devices should be turned off and unplugged.

Note

- If the device connected to Input Port also supports HDMI Deep Colour, your picture may be clearer. However, if the device doesn't support it, it may not work properly. In that case, change the TV's [HDMI Deep Colour] setting to off. (Depending on model)
- ⚙ → [⚙] → [General] → [External Devices] → [HDMI Settings] → [HDMI Deep Colour] (Depending on model)
- Use a certified cable with the HDMI logo attached.
- If you do not use a certified HDMI cable, the screen may not display or a connection error may occur.
- Recommended HDMI Cable Types
  - Ultra High Speed HDMI®/™ cable (3 m or less)

USB

Some USB Hubs may not work. If a USB device connected using a USB Hub is not detected, connect it to the USB port on the TV directly. (Depending on model)

Note

- For an optimal connection, HDMI cables and USB devices should have bezels less than 10 mm thick and 18 mm width. Use an extension cable that supports USB 2.0 if the USB cable or USB memory stick does not fit into your TV's USB port. (Depending on model)

External Devices

Available external devices are: Blu-ray player, HD receivers, DVD players, VCRs, audio systems, USB storage devices, PC, gaming devices, and other external devices.

Note

- The external device connection may differ from the model.
- In PC mode, there may be noise associated with the resolution, vertical pattern, contrast or brightness. If noise is present, change the PC output to another resolution, change the refresh rate to another rate or adjust the brightness and contrast on the [Picture] menu until the picture is clear.
- In PC mode, some resolution settings may not work properly depending on the graphics card.
- If Ultra HD content is played on your PC, video or audio may become disrupted intermittently depending on your PC's performance. (Depending on model)
- When connecting to a wired LAN, use a CAT 7 cable with high-speed Internet transmission. (Only when **LAN** port is provided.)

Specifications

Power requirement	AC 100-240 V~ 50/60 Hz

(Depending on country)

Broadcasting Specifications	
Television system	Terrestrial / Cable / Satellites Digital TV
External antenna impedance	75 Ω

- Certain 8K input/decoding standards may not be supported. An additional device may be necessary to support certain 8K standards. Upscaled and enhanced 8K images will vary depending on the source content (Depending on model).

Environment Condition			
Operating Temperature	0 °C to 40 °C	Storage Temperature	-20 °C to 60 °C
Operating Humidity	Less than 80 %	Storage Humidity	Less than 85 %

- The energy information provided with the product is indicated in accordance with the regulations of each country. (Depending on country)
  - The Energy consumption is measured in accordance with IEC 62087.

- Actual Energy consumption may vary depending on factors such as the type of video content being played and TV settings.
- For information of the power supply and power consumption, refer to the label attached to the product. (Depending on country)
  * On some models, the label is inside the external device connection terminal cover.

Open Source Software Notice Information

To obtain the source code that is contained in this product, under GPL, LGPL, MPL, and other open source licenses that have the obligation to disclose source code, and to access all referred license terms, copyright notices and other relevant documents please visit *https://opensource.lge.com*.

LG Electronics will also provide open source code to you on CD-ROM for a charge covering the cost of performing such distribution (such as the cost of media, shipping, and handling) upon email request to opensource@lge.com.

This offer is valid to anyone in receipt of this information for a period of three years after our last shipment of this product.

Licenses

HDMI™
HIGH-DEFINITION MULTIMEDIA INTERFACE

QuickSet®
(Magic Remote supported models only)

HEVC Advance™
Covered by patents at patentlist.accessadvance.com

Use of any third party applications and/or services enabled on the Smart TVs require third party licences or subscriptions and are subject to the third party applications and/or services Terms of Use.

It is the responsibility of the customers and/or user to ensure that they comply with the Terms of Use and do not use the third party applications and/or services for commercial purposes, unless an appropriate license has been obtained.

Breach of the terms of use or misuse of third party applications and/or services may infringe third party intellectual property rights including copyright law and is not authorized or sanctioned by LG.

Troubleshooting

In TV / HDMI input, press the button on the remote control three times to display the model name and serial number on the screen.

Cannot control the TV with the remote control.	• Check the remote control sensor on the product and try again. • Check if there is any obstacle between the product and the remote control. • Check if the batteries are still working and properly installed (⊕ to ⊕, ⊖ to ⊖).
No image display and no sound is produced.	• Check if the product is turned on. • Check if the power cord is connected to a wall outlet. • Check if there is a problem in the wall outlet by connecting other products.
The TV turns off suddenly.	• Check the power control settings. The power supply may be interrupted. • Check if the auto-off function is activated on the settings related time. • The auto-off function may have worked. This product is equipped with an auto-off function that automatically turns off the power if the remote control is not used for 15 minutes without an input signal.
When connecting to the PC (HDMI), no signal is detected.	• Turn the TV off/on using the remote control. • Reconnect the HDMI cable. • Restart the PC with the TV on.
Abnormal Display	• If the product feels cold to the touch, there may be a small "flicker" when it is turned on. This is normal, there is nothing wrong with product. • This panel is an advanced product that contains millions of pixels. You may see tiny black dots and/or brightly coloured dots (red, blue or green) at a size of 1 ppm on the panel. This does not indicate a malfunction and does not affect the performance and reliability of the product. This phenomenon also occurs in third-party products and is not subject to exchange or refund. • You may find different brightness and colour of the panel depending on your viewing position(left/right/top/down). This phenomenon occurs due to the characteristic of the panel. It is not related with the product performance, and it is not malfunction. • Avoid touching the screen or holding your finger(s) against it for long periods of time. Doing so may produce some temporary distortion effects on the screen. • Displaying a still image for a prolonged period of time may cause image sticking. Avoid displaying a fixed image on the TV screen for a long period of time.
Generated Sound	• **"Cracking" noise**: A cracking noise that occurs when watching or turning off the TV is generated by plastic thermal contraction due to temperature and humidity. This noise is common for products where thermal deformation is required. • **Electrical circuit humming/panel buzzing**: A low level noise is generated from a high-speed switching circuit, which supplies a large amount of current to operate a product. It varies depending on the product. This generated sound does not affect the performance and reliability of the product.

⚠

- When cleaning the product, be careful not to allow any liquid or foreign objects to enter the gap between the upper, left or right side of the panel and the guide panel. (Depending on model)
- Make sure to wring any excess water or cleaner from the cloth.
- Do not spray water or cleaner directly onto the TV screen.
- Make sure to spray just enough of water or cleaner onto a dry cloth to wipe the screen.

Using Magic Remote Control

Power Turns the TV on or off.

Home Hub Accesses the [Home Hub].

** **Home Hub** Changes the input source.

Home Accesses the Home menu.

** **Home** The screen zoom function is activated.

Wheel (OK) Press the centre of button to select a menu. You can change programmes by using button.

Up/Down/Left/Right Press the up, down, left or right button to scroll the menu. If you press buttons while the pointer is in use, the pointer will disappear from the screen and Magic Remote will operate like a general remote control. To display the pointer on the screen again, shake Magic Remote to the left and right.

Back Returns to the previous level.

** **Back** The screen displayed on the TV is closed and the home menu appears.

Volume buttons Adjusts the volume level.

** **Volume buttons** Mutes all sounds.

Microphone

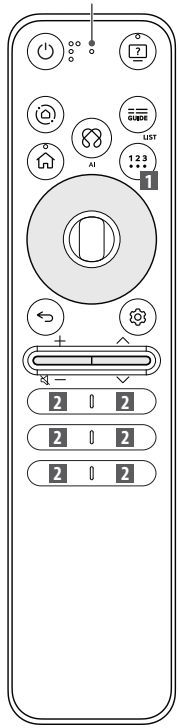

Accessibility Accesses the [Accessibility] app.

** **Accessibility** Accesses the [Accessibility Shortcuts].

GUIDE Accesses the [Guide].

LIST ** Accesses the saved programmes list.

AI Network connection is required to use the voice recognition function.

Check for recommended content. (Some recommended services may not be available in some countries.)

** **AI** Speak while pressing and holding the button to use the voice recognition feature.

More actions Displays more remote control functions.

1 AD/SAP ** Audio descriptions function will be enabled.

Q. Settings Accesses the Quick Settings.

** **Q. Settings** Displays the All Settings menu.

Programme buttons Scrolls through the saved programmes.

2 **Various services button** Connects to various services such as streaming and voice search.

2 **Volume buttons** Mutes all sounds.

2 **User Guide** Accesses the [User Guide].

2 FAV Accesses your favorite programmes list.

2 **Control buttons** Controls media contents.

Note ** **To use the button, press and hold for more than 1 second.**

The descriptions in this manual are based on the buttons on the remote control. Please read this manual carefully and use the TV correctly.

(Some buttons and services may not be provided depending upon models or regions.)

How to register the Magic Remote Control

To use the Magic Remote, first pair it with your TV.

1 Put batteries into the Magic Remote and turn the TV on.

2 Point the Magic Remote at your TV and press the **Wheel (OK)** on the remote control.

* If the TV fails to register the Magic Remote, try again after turning the TV off and back on.

How to deregister the Magic Remote Control

Press the **(Back)** and **(Home)** buttons at the same time, for five seconds, to unpair the Magic Remote with your TV.

* Press and hold the **(Home)** and **(Q. Settings)** buttons for more than 5 seconds to disconnect and re-register the Magic Remote at the same time.

⚠

- It is recommended that an Access Point (AP) be located more than 0.2 m away from the TV. If the AP is installed closer than 0.2 m, the Magic remote control may not perform as expected due to frequency interference.

Using Always Ready

(Depending upon model)

You can operate the TV and connect to Bluetooth with direct voice recognition while the power is off.

* → [] → [General] → [Always Ready], setting [Enable the function] to on.

* Pressing the button while watching TV switches the screen to [Always Ready] that is turned on, and pressing the button once more turns the screen to [Always Ready] that is turned off.

* Press the **(Home)** button or the **(Back)** button to watch TV when the screen is in [Always Ready] that is turned on.

* Press the **Wheel (OK)** button to display the wallpaper when the screen is in [Always Ready] that is turned off, and press the button to watch TV.

Note

- Using Always Ready may increase energy consumption.
- For more information about the feature, refer to the → [] → [Support] → [User Guide] → [Troubleshooting] → [Learn More About Always Ready].

Regulatory

1) Algeria

agréé par l'ANF	
MR25GA	437/H/ANF/2024
MR25GA	440/H/ANF/2024
MR25GA	441/H/ANF/2024
MR25GA	438/H/ANF/2024
MR25GA	439/H/ANF/2024

2) Djibouti

AGREE PAR LE MCPT
(REPUBLIQUE DE DJIBOUTI)
Numéro d'agrément : 123/DDTIC/2024
Date d'agrément : 24/09/2024

3) Ghana

NCA APPROVED : M1-7E8-1AF-SRH

4) Morocco

AGREE PAR L'ANRT MAROC
Numéro d'agrément : MR00003704ANRT2024
Date d'agrément : 28/08/2024

5) Zambia

ZICTA
ZMB/ZICTA/TA/2024/8/67

6) Senegal

AGREE PAR ARTP SENEGAL
Numéro d'agrément : 072970/AG/ER

7) Tanzania

TCRA Approved
TECESRD/0172/2024

8) UAE

TDRA

ER35550/24
United Arab Emirates