LG

MFL05813404260 2REV00

OLED83C6PTA OLED55C6PTA
OLED77C6PTA OLED48C6PTA
OLED65C6PTA OLED42C6PTA

www.lg.com PDF

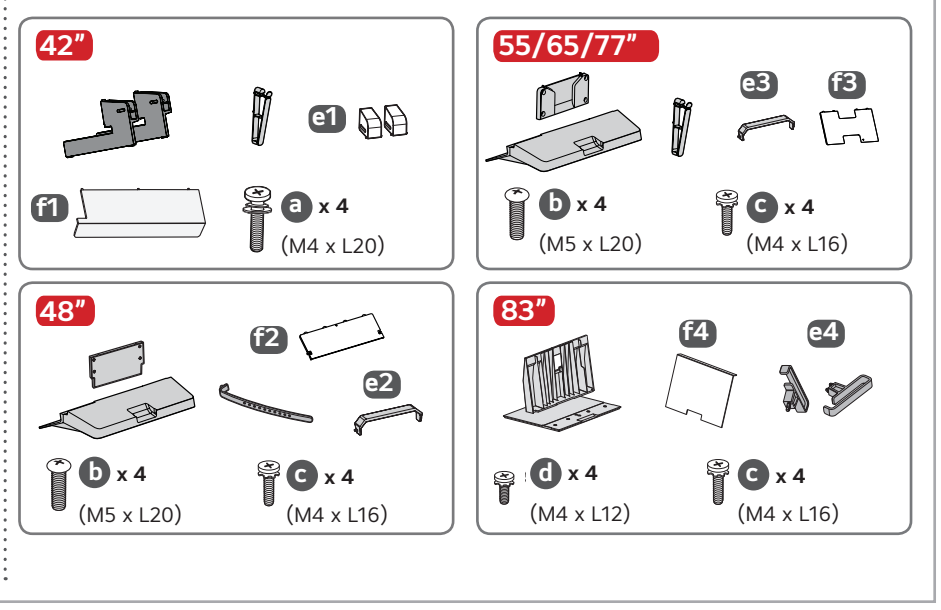

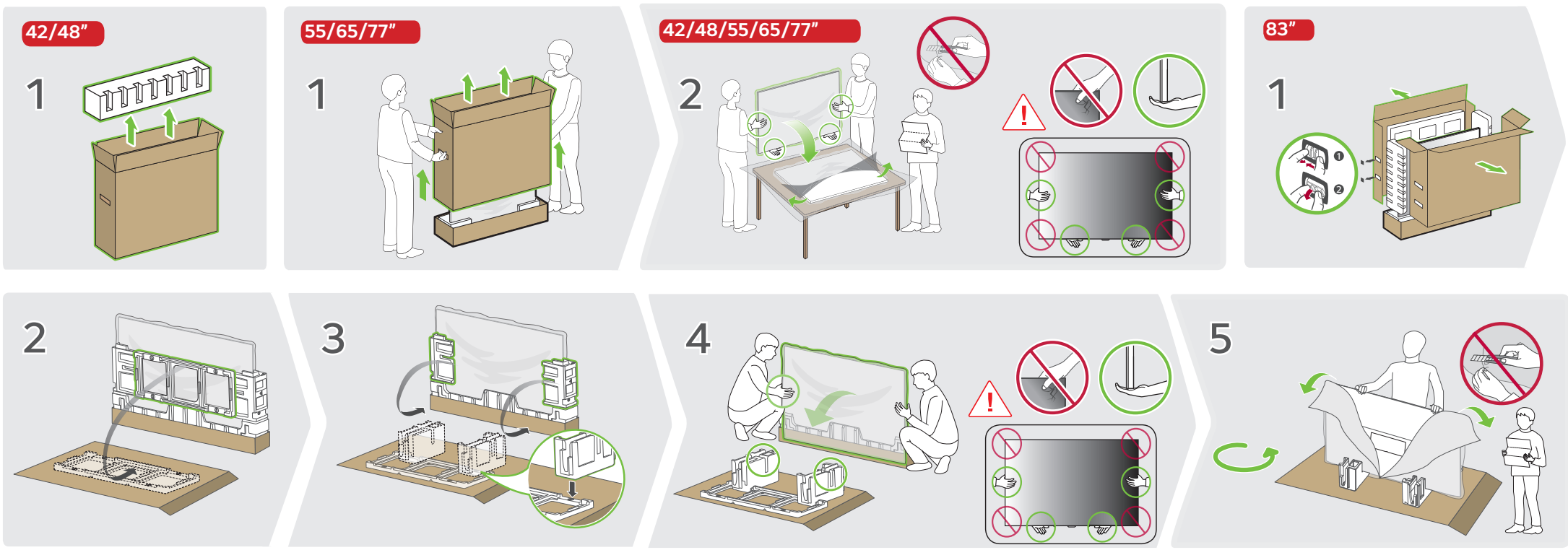

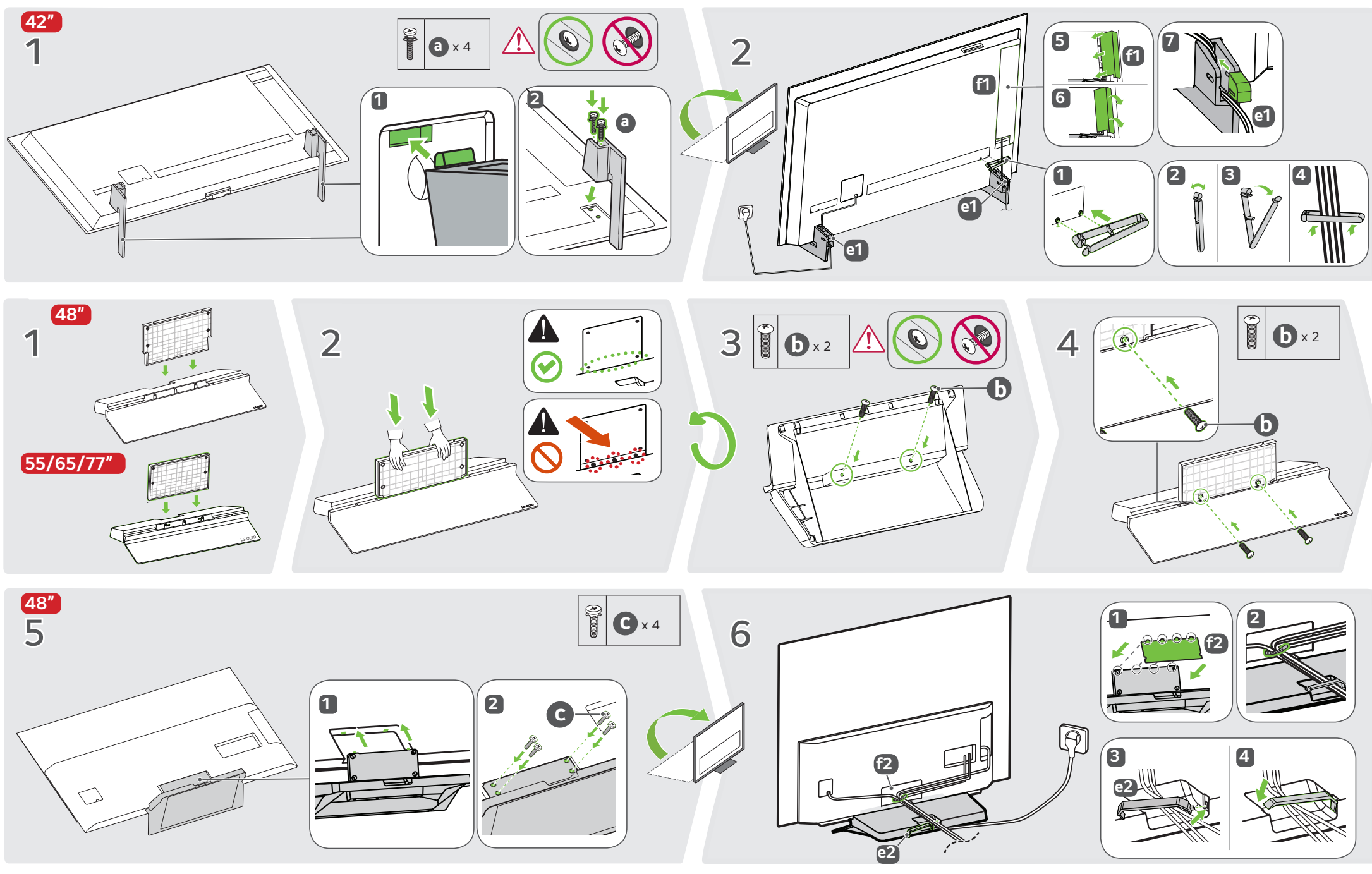

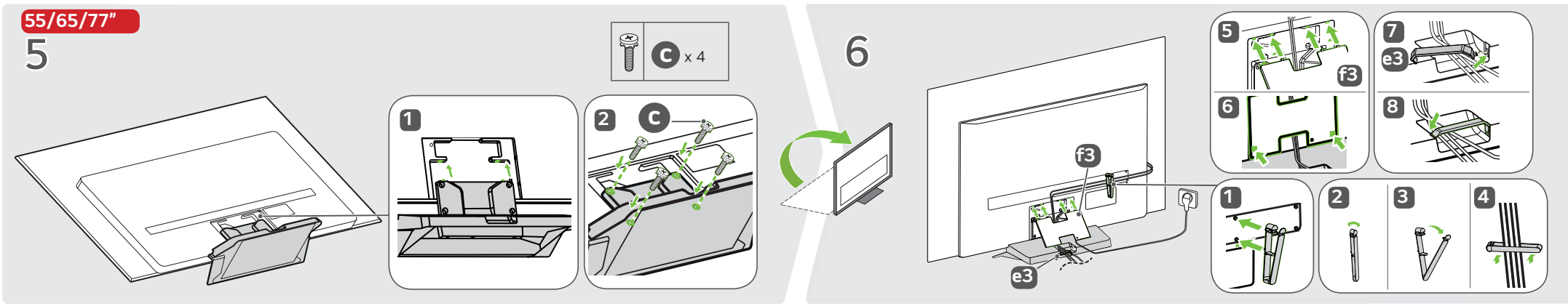

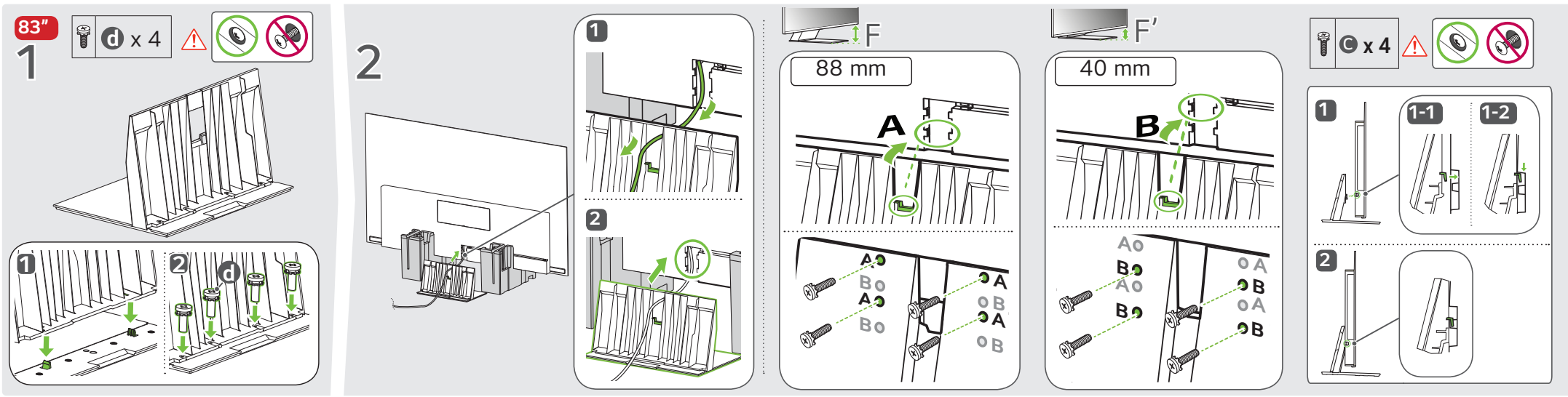

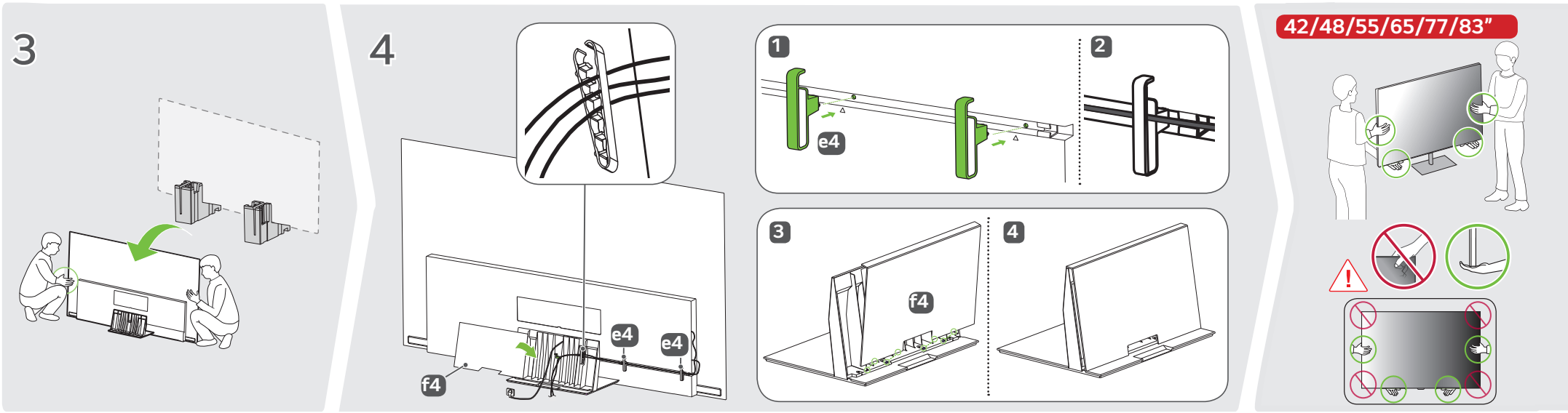

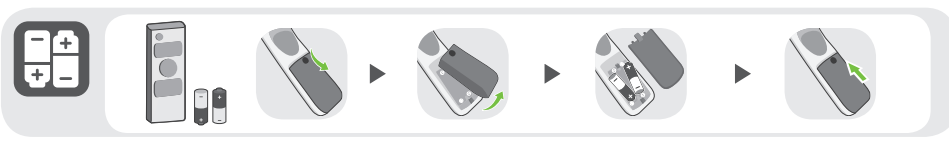

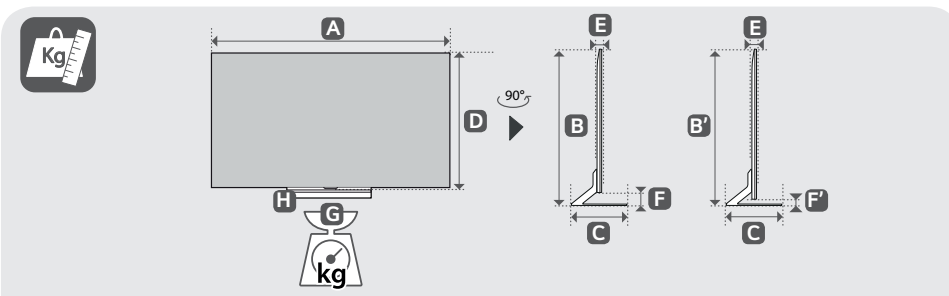

	A	B	B'	C	D	E	F	F'	G	G - H
	(公釐)								(公斤)	
OLED42C6PTA	932	577	-	170	540	41.1	37	-	10.1	9.8
OLED48C6PTA	1071	675	-	230	620	46.9	55	-	16.7	14.9
OLED55C6PTA	1222	757	-	230	703	45.1	54	-	15.9	14.1
OLED65C6PTA	1441	880	-	230	826	45.1	54	-	18.4	16.6
OLED77C6PTA	1711	1035	-	267	982	47.1	53	-	27.0	23.5
OLED83C6PTA	1842	1144	1096	297	1055	52.9	88	40	33.0	28.3

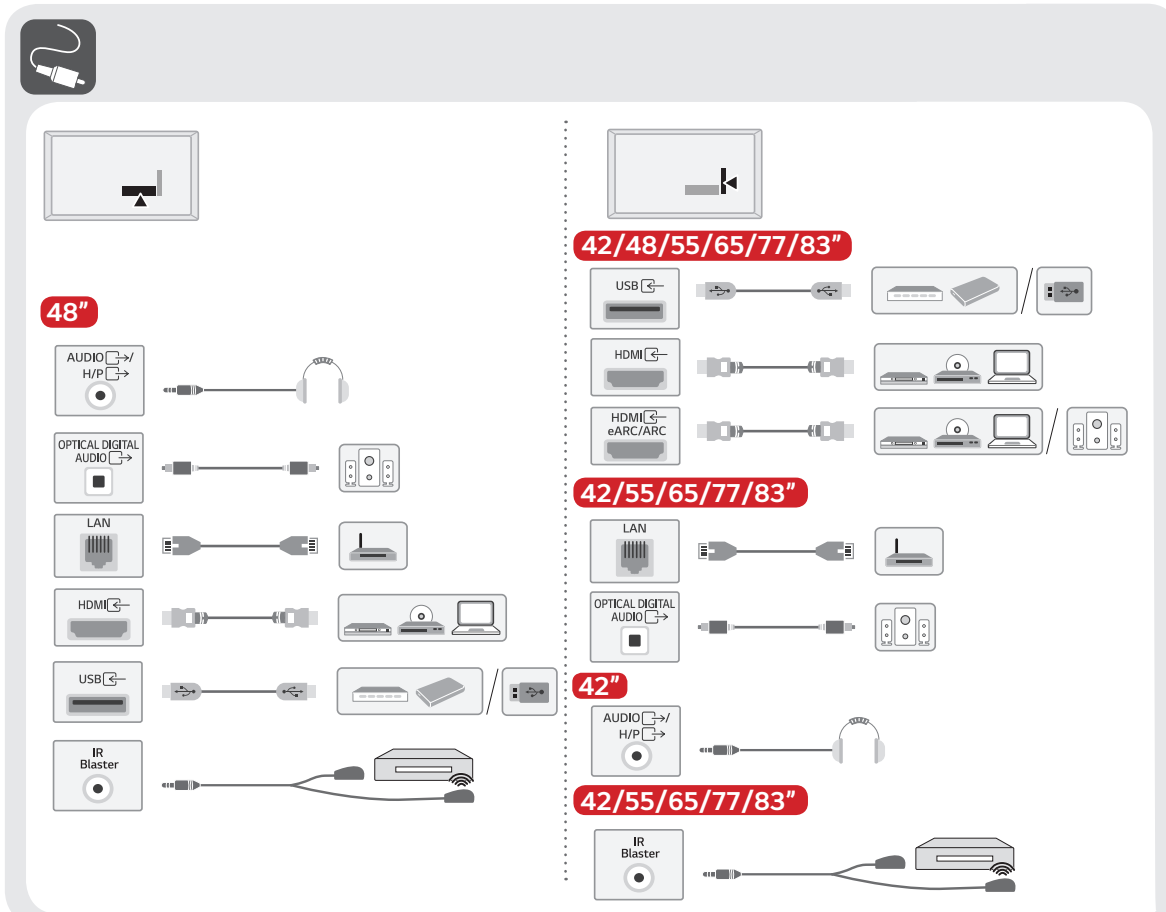

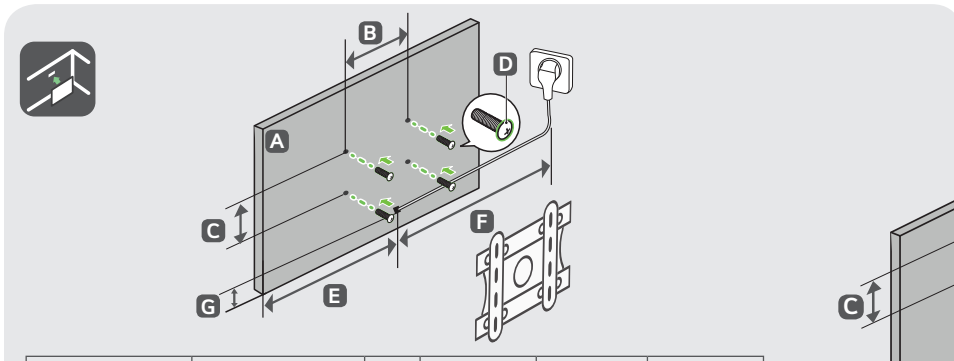

A	B x C (公釐)	D	E (公釐)	F (公尺)	G (公釐)
OLED42C6PTA	300 x 200	M6	263	≥1.5	113
OLED48C6PTA	300 x 200	M6	126	≥1.5	118
OLED55C6PTA	300 x 200	M6	523	≥1.5	121
OLED65C6PTA	300 x 200	M6	633	≥1.5	121
OLED77C6PTA	300 x 200	M6	769	≥1.5	121
OLED83C6PTA	400 x 400	M6	896	≥1.5	114

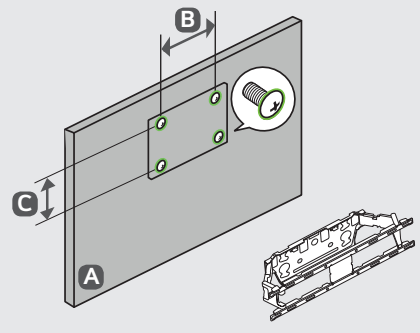

A	B x C (公釐)
OLED83C6PTA	180 x 55

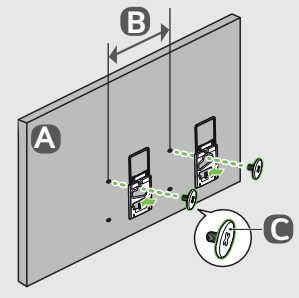

A	B (公釐)	C
OLED55C6PTA OLED65C6PTA OLED77C6PTA	300	M6
OLED83C6PTA	400	

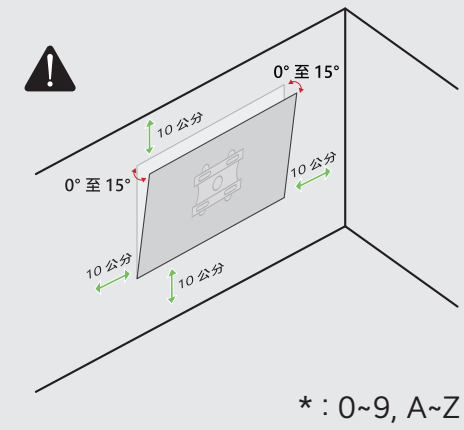

* : 0~9, A~Z