Scan to see the online manual.

OWNER'S MANUAL

WASHING MACHINE

Read this owner's manual thoroughly before operating the appliance and keep it handy for reference at all times.

ENGLISH

WT8200C*

MFL72042073
Rev.04_092926

www.lg.com

Copyright © 2025-2026 LG Electronics. All Rights Reserved

TABLE OF CONTENTS

3 IMPORTANT SAFETY INSTRUCTIONS

3 READ ALL INSTRUCTIONS BEFORE USE
3 WARNING STATEMENTS
6 CAUTION STATEMENTS

7 PRODUCT OVERVIEW

7 Product Features

9 INSTALLATION

9 Before Installing
10 Choosing the Proper Location
10 Unpacking and Removing Shipping Material
11 Connecting the Water Inlet Hoses
13 Connecting the Drain Hose
13 Leveling the Washer
15 Final Installation Check

17 OPERATION

17 Before Use
17 Sorting Laundry
18 Loading the Washer
19 Adding Cleaning Products
22 Control Panel
24 Wash Cycles
27 Cycle Modifiers
27 Options and Extra Functions

30 SMART FUNCTIONS

30 LG ThinQ Application
33 Smart Diagnosis™ Function

34 MAINTENANCE

34 Regular Cleaning
34 Periodic Maintenance
37 Care in Cold Climates

39 TROUBLESHOOTING

39 Before Calling for Service

47 LIMITED WARRANTY

47 USA
51 CANADA

IMPORTANT SAFETY INSTRUCTIONS

READ ALL INSTRUCTIONS BEFORE USE

Safety Messages

Your safety and the safety of others are very important.

We have provided many important safety messages in this manual and on your appliance. Always read and follow all safety messages.

This is the safety alert symbol.

This symbol alerts you to potential hazards that can kill or injure you and others. All safety messages will follow the safety alert symbol and either the word WARNING or CAUTION.

These words mean:

WARNING

You may be killed or seriously injured if you do not follow instructions.

CAUTION

You may be injured or cause damage to the product if you do not follow instructions.

All safety messages will tell you what the potential hazard is, tell you how to reduce the chance of injury, and tell you what may happen if the instructions are not followed.

WARNING STATEMENTS

WARNING

- To reduce the risk of explosion, fire, death, electric shock, scalding or injury to persons when using this product, follow basic precautions, including the following:

Installation

- Adhere to all industry recommended safety procedures including the use of long-sleeved gloves and safety glasses.
- Never attempt to operate this appliance if it is damaged, malfunctioning, partially disassembled, or has missing or broken parts, including a damaged cord or plug.
- Before use, the appliance must be properly installed as described in this manual.
- To reduce the risk of severe injury or death, follow all installation instructions.
- Refer to the INSTALLATION INSTRUCTIONS for detailed grounding procedures. Installation instructions are packed with the appliance for the installer’s reference. If the appliance is moved to a new location, have it checked and reinstalled by qualified service personnel.
- Moving or installation of the appliance requires two or more people.
- Do not install the appliance in humid spaces.
- Store and install the appliance where it will not be exposed to temperatures below freezing or exposed to outdoor weather conditions.
- This appliance is not designed for maritime use or for mobile installations such as in RVs, trailers, or aircraft.
- We strongly recommend not using a drain pan when installing this appliance, as standing water in the drain pan may increase the risk of electric shock, injury, or death.

- Keep packing materials out of the reach of children. Packaging material can be dangerous for children. There is a risk of suffocation.
- Destroy the carton, plastic bag, and other packing materials after the appliance is unpacked. Children might use them for play. Cartons covered with rugs, bedspreads, or plastic sheets can become airtight chambers.
- The appliance must be installed and electrically grounded by qualified service personnel in accordance with local codes.
- When installing or moving the appliance, be careful not to pinch, crush, or damage the power cord.
- Connect to a properly rated, protected, and sized power circuit to avoid electrical overload.
- This appliance must be positioned near to an electrical power supply.
- Disconnect the power cord, house fuse or circuit breaker before installing or servicing the appliance.
- The power cord of this appliance is equipped with a 3-prong (grounding) plug which mates with a standard 3-prong (grounding) wall outlet to minimize the possibility of electric shock from this appliance.
- Do not, under any circumstances, cut or remove the third (ground) prong from the power cord.
- Use new hoses when connecting the appliance to the water supply. Do not reuse old hoses.

Operation

- Read all instructions before using the appliance and save these instructions.
- Use this appliance only for its intended purpose.
- Clothing or articles that are waterproof or water resistant must be washed in the Waterproof cycle only. (Examples include water resistant clothing, mattress covers, outdoor clothes, plastic mats.) WARNING: Failure to closely follow these instructions may result in an abnormal vibration and out-of-balance condition that could result in injury, property damage, and/or appliance damage.
- If the product has been submerged in water, sitting in standing water, or waterlogged, do not come in contact with the product and immediately contact an LG Electronics customer information center for instructions before resuming use.
- If you detect a strange sound, a chemical or burning smell, or smoke coming from the appliance, unplug it immediately, and contact an LG Electronics Customer Information Center.
- Under certain conditions, hydrogen gas may be produced in a hot-water system that has not been used for two weeks or more. HYDROGEN GAS IS EXPLOSIVE. If the hot-water system has not been used for such a period, before using the appliance, turn on all hot water faucets and let the water flow from each for several minutes. This will release any accumulated hydrogen gas. As the gas is flammable, do not smoke or use an open flame during this time.
- Do not reach into the washer if the tub or drum, agitator, or any interior parts are moving. Before loading, unloading, or adding items, press **Start/Pause** and allow the tub or drum to coast to a complete stop before reaching inside.
- This appliance is not intended for use by persons (including children) with reduced physical, sensory or mental capabilities, or lack of experience and knowledge, unless they have been given supervision or instruction concerning the use of the appliance by a person responsible for their safety.
- Do not allow children or pets to play on, in or with the appliance. Close supervision is necessary when the appliance is used near children or pets.
- Keep laundry products out of the reach of children. To prevent injury to persons, observe all warnings on product labels.
- Repair or immediately replace all power cords that have become frayed or otherwise damaged. Do not use a cord that shows cracks or abrasion damage along its length or at either end.
- Never unplug the appliance by pulling on the power cord. Always grip the plug firmly and pull straight out from the outlet.
- Do not use an extension cord or adapter with this appliance.
- Do not grasp the power cord or touch the appliance controls with wet hands.

- Do not modify or extend the power cord.
- If the electrical supply cord is damaged, it must only be replaced by the manufacturer or its service agent or a similar qualified person in order to avoid a hazard.
- Do not put oily or greasy clothing, candles or flammable materials on top of the appliance.
- Keep the area underneath and around your appliances free of combustible materials (lint, paper, rags, etc.), gasoline, chemicals and other flammable vapors and liquids.
- Do not store or use gasoline or other flammable vapors and liquids in the vicinity of this or any other appliance.
- Do not mix chlorine bleach with ammonia or acids such as vinegar. Follow package directions when using laundry products. Incorrect usage can produce poisonous gas, resulting in serious injury or death.
- Never use harsh chemicals, abrasive cleaners, or solvents to clean the washer. They will damage the finish.
- Do not wash laundry that has been previously cleaned in, washed in, soaked in, or spotted with gasoline, dry-cleaning solvents, vegetable or cooking oil, or other flammable or explosive substances, as they give off vapors that could ignite or explode.
- Do not add gasoline, dry cleaning solvents, or other flammable or explosive substances to the wash water. These substances give off vapors that could ignite or explode.
- In the event of a gas leak (propane gas, LP gas, etc.), do not operate this or any other appliance. Open a window or door to ventilate the area immediately.
- Do not tamper with controls.
- Fix the drain hose securely in place to avoid flooding.
- Do not abuse, sit on, or stand on the lid of the appliance.
- Keep hands and foreign objects clear of the lid and latch area when closing the lid.
- Always check the inside of the appliance for foreign objects.

Maintenance

- Do not repair or replace any part of the appliance. All repairs and servicing must be performed by qualified service personnel unless specifically recommended in this owner’s manual. Use only authorized factory parts.
- Disconnect this appliance from the power supply before cleaning and attempting any user maintenance. Turning the controls to the OFF position does not disconnect this appliance from the power supply.
- Remove any dust or foreign matter from the power plug pins.
- Do not disassemble or repair the appliance by yourself.
- Remove the lid before the appliance is removed from service or discarded to avoid the danger of children or small animals getting trapped inside.
- Make sure the dispenser drawer or lid is closed at all times when not being filled with laundry products.

Grounding Instructions

- Improper connection of the equipment-grounding conductor can result in a risk of electric shock. Check with a qualified electrician or service personnel if you are in doubt whether the appliance is properly grounded. Do not modify the plug provided with the appliance; if it will not fit the outlet, have a proper outlet installed by a qualified electrician.
- The appliance must be grounded. In the event of a malfunction or breakdown, grounding will reduce the risk of electric shock by providing a path of least resistance for electric current. The appliance is equipped with a cord having an equipment-grounding conductor and a grounding plug. The plug must be plugged into an appropriate outlet that is installed and grounded in accordance with all local codes and ordinances.

CAUTION STATEMENTS

⚠ CAUTION

- To reduce the risk of minor or moderate injury to persons, malfunction, or damage to the product or property when using this product, follow basic precautions, including the following:

Installation

- Install the product on a firm and level floor.

Operation

- Do not place objects on top of the appliance.
- Turn off the water faucets and unplug the appliance if the appliance is to be left for an extended period of time, such as during vacations.
- ALWAYS follow the fabric care instructions supplied by the garment manufacturer.
- Use fabric softeners or products to eliminate static only as recommended by the manufacturer.
- Do not combine laundry products for use in one load unless specified on the label.
- Do not touch draining water which may be hot.
- If the drain hose and the water inlet hose are frozen in winter, defrost them before using the appliance.
- Do not store or spill liquid detergents, cleaners, or bleaches (chlorine bleach, oxygen bleach) on the appliance. Doing so may result in corrosion, discoloration or damage to the surface of the appliance.

SAVE THESE INSTRUCTIONS

PRODUCT OVERVIEW

Product Features

The images in this guide may be different from the actual components and accessories, which are subject to change by the manufacturer without prior notice for product improvement purposes.

NOTE

- For your safety and for extended product life, use only authorized components. The manufacturer is not responsible for product malfunction, property damage or bodily injury caused by the use of separately purchased unauthorized components, parts, or non-LG products.

Front View

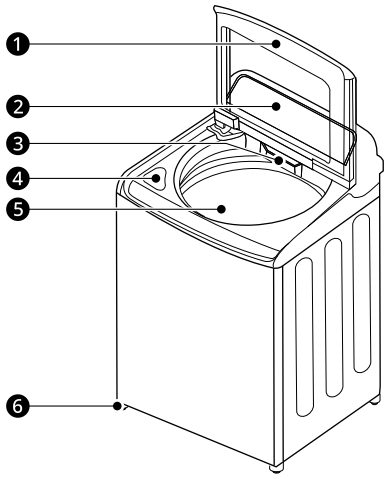

❶ Lid

❷ Control Panel

❸ Detergent Dispenser Drawer

❹ Liquid Bleach Compartment

❺ Tub

❻ Leveling Feet

Rear View

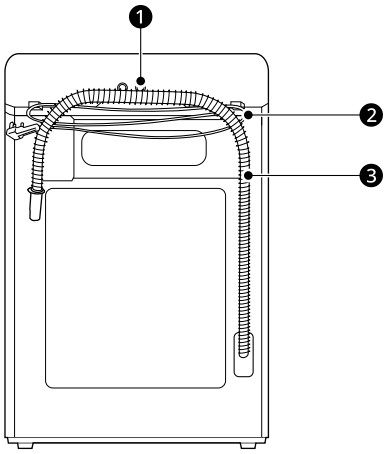

❶ Water Inlets

❷ Power Cord

❸ Drain Hose

Accessories

Included Accessories

❶

❶ Tie Strap

Required Accessories (sold separately)

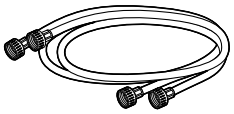

❶

❶ Hot and Cold Water Hoses

Product Specifications

The appearance and specifications listed in this manual may vary due to constant product improvements.

Model	WT8200C*
Electrical Requirements	120 VAC @ 60 Hz
Min. / Max. Water Pressure	20 - 120 psi (138 - 827 kPa)
Dimensions (Width X Height X Depth)	27" X 43" X 28 3/8" (68.6 cm X 109.2 cm X 72.1 cm)
Maximum Height with Lid Open	57” (144.8 cm)
Net Weight	127.9 lb (58.0 kg)
Max. Spin Speed	800 RPM (±50 rpm)

INSTALLATION

Before Installing

WARNING

- Moving or installation of the appliance requires two or more people. Failure to follow these instructions may result in injury.
- Store and install the appliance where it will not be exposed to temperatures below freezing or exposed to outdoor weather conditions. Failure to follow this warning can cause product or part failure, serious injury, fire, electric shock, or death.
- Properly ground the washer to conform with all governing codes and ordinances. Failure to follow this warning can cause serious injury, fire, electric shock, or death.
- To reduce the risk of electric shock, do not install the appliance in humid spaces. Failure to follow this warning can cause serious injury, fire, electric shock, or death.
- To ensure proper airflow, do not block the large opening on the bottom of the washer with carpeting or other materials.
- Do not remove the ground prong from the power cord. Do not use an adapter or extension cord. Plug into a grounded 3-prong outlet. Failure to follow this warning can cause serious injury, fire, electric shock, or death.
- Certain internal parts are intentionally not grounded and may present a risk of electric shock only during servicing. Service personnel - Do not contact the following parts while the appliance is energized: pump, motor, noise filter cover, protective cover and heater (on applicable models).

Installation Overview

Please read the following installation instructions first after purchasing this washer or transporting it to another location.

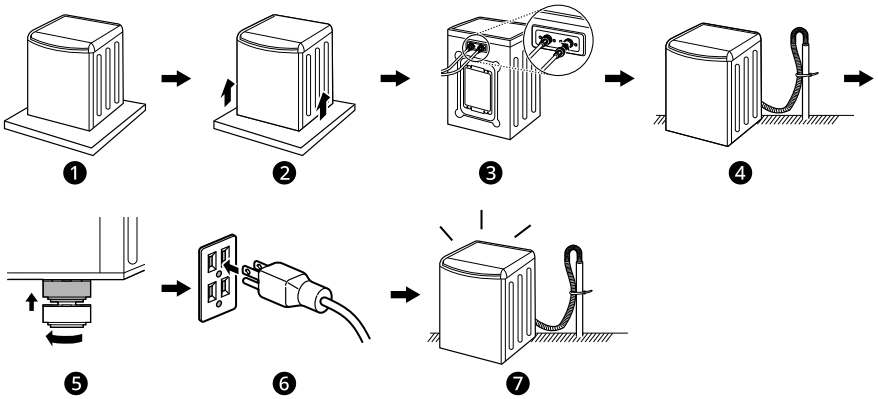

❶ Choosing the Proper Location

❷ Unpacking and Removing Shipping Material

❸ Connecting the Water Inlet Hoses

❹ Connecting the Drain Hose

❺ Leveling the Washer

❻ Connecting to the Power Supply

❼ Final Installation Check

Tools Needed

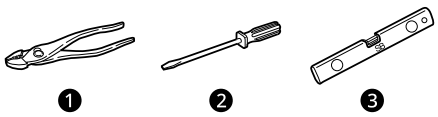

❶ Pliers

❷ Flat-Blade Screwdriver

❸ Level

Choosing the Proper Location

Check the following requirements for the install location before installing the washer.

- Allow for sufficient space between the walls and the washer for installation.
- Make sure that the floor is clean, dry and free of dust, dirt, water and oil so the leveling feet cannot slide easily. Leveling feet that can move or slide on the floor can contribute to excess vibration and noise.
- If the floor has too much flex, reinforce it to make it more rigid. If the floor is not solid, it may cause severe vibration and noise.

Power Outlet

The power outlet must be within **60 inches (1.5 m)** of either side of the washer.

- Position the washer so that the outlet and plug are easily accessible.
- Do not overload the outlet with more than one appliance.
- The outlet must be grounded in accordance with current electrical wiring codes and regulations.
- Use a time-delay fuse or circuit breaker.
- It is the personal responsibility and obligation of the washer owner to have a proper outlet installed by a qualified electrician.

Flooring

- To minimize noise and vibration, install the washer on a level, solidly constructed floor capable of supporting the washer without flexing or bouncing.
- The washer must be installed on firm flooring to minimize vibration during the spin cycle. Concrete flooring is best, but a wood floor is sufficient, provided it is built to FHA standards.
- The floor under the washer must not slope more than **1 inch (2.5 cm)** from front to back or side to side.
- Installing on carpeting and soft tile surfaces is not recommended.
- Never install the washer on a platform or weakly supported structure.

Floor Installation

To ensure sufficient clearance for water inlet hoses, drain hose and airflow, allow minimum clearances of at least **1 inch (2.5 cm)** at the sides and **4 inches (10 cm)** behind the washer. Be sure to allow for wall, door, or floor moldings that may increase the required clearances.

Minimum vertical space from floor to overhead shelves, cabinets, ceilings, etc., is **58 inches (147 cm)**.

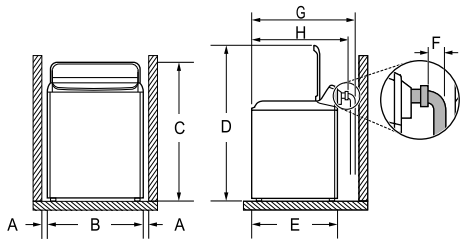

Dimensions and Clearances	
A	1” (2.5 cm)
B	27” (68.6 cm)
C	43” (109.2 cm)
D	57” (144.8 cm)
E	26 3/4” (68 cm)
F	3 1/2” (9 cm)
G	32” (81.1 cm)
H	28 3/8” (72.1 cm)

Unpacking and Removing Shipping Material

Remove all shipping materials from the washer for proper operation and inspect it for shipping damage.

⚠ CAUTION

- Failure to remove shipping materials can cause excessive noise and vibration.

Unpacking Shipping Material

1 Lift the washer off of the foam base.

- After removing the carton and shipping material, lift the washer off the foam base.
- Make sure the plastic tub support ❶ comes off with the base and is not stuck to the bottom of the washer.
- If you must lay the washer down to remove the carton base ❷, always protect the side of the washer and lay it carefully on its side. Do not lay the washer on its front or back.

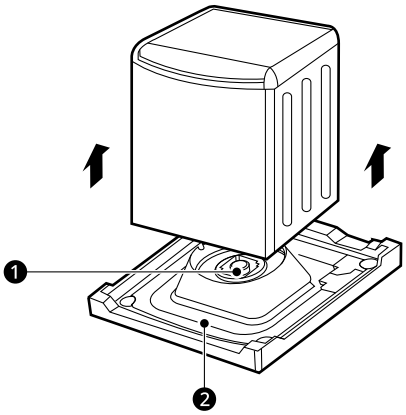

2 Remove the foam tub insert.

- To prevent damage, do not remove the foam insert ❸ from the tub until the washer is in the final location.

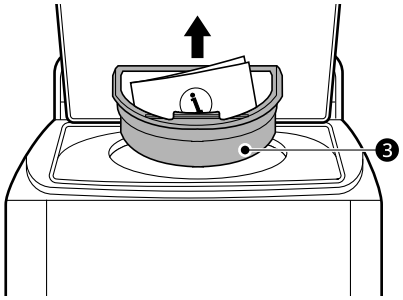

NOTE

- Once removed, save the foam insert for future use. If the washer needs to be moved, the foam insert will help prevent damage during transportation.

3 Unfasten the power cord.

- Unfasten the power cord from the back of the washer.

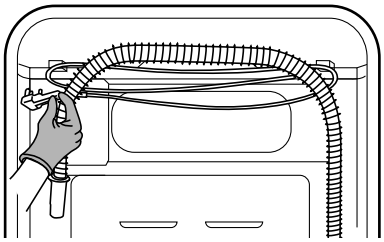

Connecting the Water Inlet Hoses

To avoid the risk of costly water damage, purchase and install new inlet hoses when installing the washer.

⚠ WARNING

- Do not overtighten the hoses or cross-thread the hose fittings. Overtightening or cross-threading can damage the valves or couplings, resulting in leaking and property damage.
- Do not reuse old hoses. Use only new hoses when installing the washer. Old hoses could leak or burst causing flooding and property damage. Contact an LG Customer Information Center for assistance in buying hoses.

NOTE

- Periodically check the hoses for cracks, leaks, and wear, and replace the hoses every five years.
- Do not stretch the water hoses intentionally, and make sure that they are not pinched, crushed or kinked by other objects.
- Water supply pressure must be between **20 psi** and **120 psi** (**138 - 827 kPa**). If the water supply pressure is more than **120 psi**, a pressure reducing valve must be installed.
- For models without an internal heater, wash water temperature depends on the home's hot water supply conditions.
- Your hot water heater should be set to deliver water at **120 - 135°F (48 - 57°C)** to allow the washer to properly control wash temperatures.

NOTE

- In homes using a tankless water heater, hot water may take longer to reach the washer after water flow begins. As a result, water temperature during filling may be lower than expected. This condition does not necessarily indicate a product malfunction.
- If your water supply contains a lot of debris, a whole home water filter may help to remove the debris from the water before it reaches the washer inlets.
- Do not store or install the washer in a location subject to freezing temperatures. Damage to the water inlet hoses and internal mechanisms of the washer can result. If the washer was exposed to freezing temperatures prior to installation, allow it to stand at room temperature for several hours before use and check for leaks prior to operation.
- Do not use flood-preventing hoses with auto shutoff devices. The devices can be tripped during fill and prevent the washer from filling properly.

How to Connect the Water Inlet Hoses

1 Check the fittings and seals.

- Inspect the threaded fitting on each hose and make sure there is a rubber seal ❶ in place in both ends of each hose to prevent leaking.

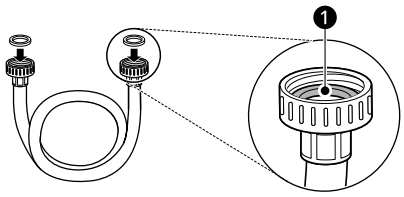

2 Connect the water supply hoses.

- Connect the water inlet hoses to the hot and cold water faucets tightly by hand and then tighten another 2/3 turn with pliers.
- Connect the blue hose to the cold water faucet and the red hose to the hot water faucet.

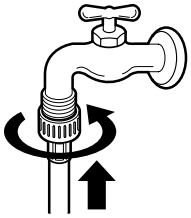

3 After the hoses are connected, turn on the water faucets and flush out any foreign substances such as dirt, sand, or sawdust. Foreign substances can damage washer inlets and lead to leakage.

- Let the water drain into a bucket, and check the water temperature to make sure you've connected the hoses to the correct faucets.

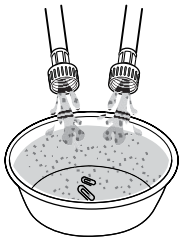

4 Attach the inlet hoses to the back of the washer.

- Attach the hot water inlet hose to the hot water inlet on the back of the washer. Attach the cold water inlet hose to the cold water inlet on the back of the washer.
- Tighten the fittings securely. Turn on both faucets all the way and check for leaks at both ends of the hoses.

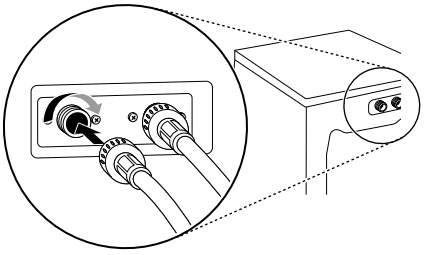

Connecting the Drain Hose

Connect the drain hose to either a standpipe or laundry tub.

WARNING

- The drain hose should always be properly secured. Failure to properly secure the drain hose can result in flooding and property damage.

NOTE

- The drain must be installed in accordance with any applicable local codes and regulations.
- Make sure that the drain hose is not stretched, pinched, crushed, or kinked.
- The end of the drain hose should be located a minimum of **29.5 inches (75 cm)** and a maximum of **96 inches (244 cm)** above the bottom of the washer.
- For best results, locate the end of the drain hose no higher than **66 inches (168 cm)** above the bottom of the washer. As the drain outlet is raised beyond **66 inches (168 cm)**, the drain function will be increasingly affected.
- Never create an airtight seal between the hose and the drain with tape or other means. If no air gap is present, water can be siphoned out of the tub resulting in poor wash/rinse performance or clothing damage.

Using a Standpipe to Drain

1 Insert the end of the drain hose into the standpipe.

2 Use the provided tie strap ❶ to secure the drain hose in place.

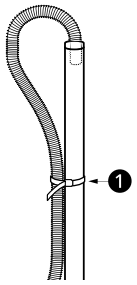

3 If the water valves and drain are built into the wall, fasten the drain hose to one of the water hoses with the provided tie strap ❷ (ribbed side on inside).

CAUTION

- Do not insert the end of the drain hose into the standpipe more than **8 inches (20 cm)**. Doing so can cause siphoning, odors, or improper draining.

NOTE

- If the drain is large enough for the flange on the hose to fit inside, then do not insert the flange more than 1 - 2 inches into the drain.

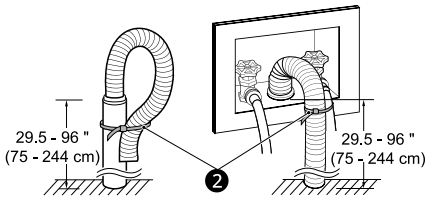

Using a Laundry Tub to Drain

1 Hang the end of the drain hose over the side of the laundry tub.

2 Use the provided tie strap to secure the drain hose in place.

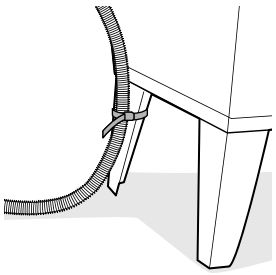

Leveling the Washer

The tub of the washer spins at very high speeds. To minimize vibration, noise, and unwanted movement, the floor must be a solid, level surface.

CAUTION

- Using the washer without leveling it may cause excess vibration and noise, leading to a washer malfunction.
- Adjust the leveling feet only as far as necessary to level the washer. Extending the leveling feet more than necessary can cause the washer to vibrate.

NOTE

- Before installing the washer, make sure that the floor is clean, dry and free of dust, dirt, water and oil so the washer feet cannot slide easily. Feet that move or slide on the floor can contribute to excessive vibration and noise.

How to Level the Washer

1 Position the washer in its final location.

- Take special care not to pinch, strain, or crush the water and drain hoses. If you have a carpenter's level ❶, you can use it to check that the washer is level. The slope beneath the washer should not exceed **1 inch**, and all 4 leveling feet must rest firmly on the floor.

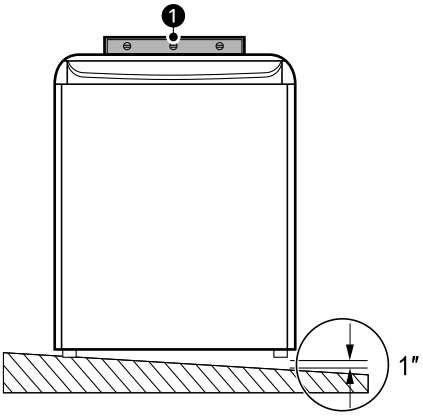

2 Open the lid and look from above to see if the tub is centered.

- If the tub is not centered, readjust the front feet. If you have a level, check the washer with the level.

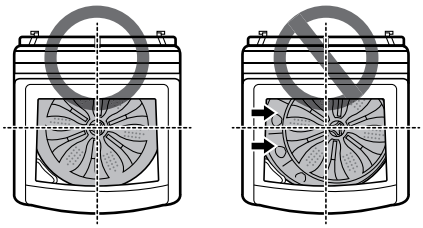

NOTE

- To check if the washer is level from side to side, place a level on the back edge of the lid.
- To check if the washer is level from front to back, place a level on the edge where the cabinet side meets the top cover. Do not place the level on the top of the lid. Using these surfaces will result in the washer being unlevel.

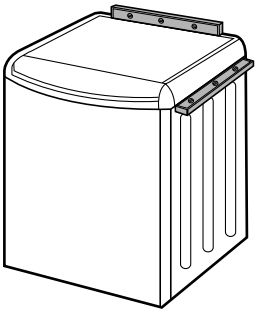

3 Adjust the leveling feet.

- Turn all 4 leveling feet in one direction to raise the washer or the other direction to lower it.

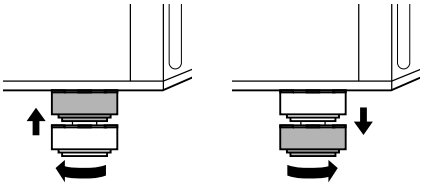

4 Recheck the washer's levelness.

- Push or rock the top edges of the washer gently to make sure the washer does not

rock. If the washer rocks,readjust the leveling feet.

- If the lid does not stay open properly, extend the front leveling legs until the washer is level from front to back.

Final Installation Check

Connecting to the Power Supply

Plug the washer into a 120 VAC, 60 Hz grounded 3-prong outlet.

WARNING

- Do not use a worn or damaged power cord or power plug. Replace or repair it immediately. Failure to do so may result in death, fire, electric shock, or malfunction.
- Do not modify the power cord and plug provided with the appliance. Do not damage it when installing or moving the appliance. Doing so may result in death, fire, electric shock, or malfunction.
- Make sure that the appliance is grounded.
- Connect this appliance to a grounded outlet conforming to the rating prior to use. Failure to do so may result in fire, electric shock, or malfunction.
- Do not damage or cut off the ground prong of the power cord. Doing so may cause death, fire, electric shock, or product malfunction.
- Improper connection of the equipment-grounding conductor can result in risk of electric shock. Check with a qualified electrician or service technician if you are in doubt as to whether the appliance is properly grounded. If it does not fit the outlet, have a proper outlet installed by a qualified electrician.
- The appliance and outlet must be positioned so that the plug is easily accessible.
- Do not use adapter or extension cords. Doing so may result in serious injury, fire, electric shock, or death.
- For best performance, plug the appliance into its own individual outlet. This helps prevent overloading house wiring circuits which could cause a fire hazard from overheated wires.
- If necessary, use a new, UL-listed 3-prong (grounding) plug rated at no less than the branch circuit. Do not use an extension cord longer than 3 feet. Failure to follow these warnings may result in serious injury, fire, electric shock, or death.

Testing the Washer

Check if the washer is properly installed and run a test cycle.

1 Make sure that the tub is empty. Do not load anything in the tub for this test. Make sure that the water faucets for the washer are fully turned on.

2 Press the **Power** button.

3 Press and hold the **Spin** and **Soil** buttons simultaneously until an In S code appears in the display.

- In is displayed first, and S, SO, or SE is displayed.
- In S : Initial test
- In SO : Previous test result was good.
- In SE : Previous test ended with an error.
- The indication is different for each model.

4 Press the **Start/Pause** button.

- The test will run for about 3 minutes.
- The test automatically checks the water inlet hoses and the drain hose.

5 Check the display for results.

6 At the end of the test cycle, End or 0 will display. The washer will shut off automatically after a short delay.

Installation Check Error Codes

Refer to the chart below before calling for service.

Error Code	Solution
IE	• Fully open the water faucet. • Straighten out any kinks in the inlet hoses and make sure the hoses are not pinched against the wall or under the washer.

Error Code	Solution
OE	• Straighten out any kinks in the drain hose and make sure the hose is not pinched against the wall or under the washer. • Remove and flush out the drain hose to remove clogs. • Adjust or repair the drain. Maximum drain height is 96 inches.

OPERATION

Before Use

WARNING

- To reduce the risk of fire, electric shock, or injury to persons, read the **SAFETY INSTRUCTIONS** before operating this appliance.

Operation Overview

Before the first wash, select the **Normal** cycle and add a half amount of the detergent. Start the appliance without clothes. This will remove possible residue and water from the drum that may have been left during manufacturing.

1 Sort laundry and load the washer.

- Sort laundry by fabric type, soil level, color and load size, as needed. Open the lid and load items into the washer.
- If using single-use detergent packs, or gel or tablet detergents, place them in the tub before loading the laundry.

2 Add cleaning products.

- Add the proper amount of HE (High-Efficiency) detergent to the detergent dispenser.
- If desired, add bleach or fabric softener to the appropriate dispensers.
- Do not place liquid or powdered detergent packs, or gel or tablet detergents in the dispenser.

3 Turn on the washer.

- Press the **Power** button to turn on the washer.
- The lights above the cycle buttons will illuminate and a chime will sound.

4 Select a cycle.

- Turn the cycle selector knob or press the cycle buttons repeatedly until the desired cycle is selected.
- The preset wash temperature, spin speed, soil level and option settings for the selected cycle are shown.
- The **Normal** cycle must be selected in order to change its default settings.
- Pressing the **Start/Pause** button without selecting a cycle immediately starts the **Normal** cycle with the default settings.

5 Adjust settings.

- Default settings for the selected cycle can be changed, if desired, using the cycle modifier and option buttons.
- Not all modifiers and options are available on all cycles. A different chime sounds and the LED does not light up if the selection is not allowed.

6 Begin cycle.

- Press the **Start/Pause** button to begin the cycle. The lid locks, and the washer agitates briefly without water to measure the weight of the load.
- If the **Start/Pause** button is not pressed within a certain time, the washer shuts off and all settings are lost.

NOTE

- You must press and hold the **Power** button when turning off the appliance. This helps prevent accidentally turning it off during a cycle.

7 End of cycle.

- When the cycle is finished, a melody sounds. Immediately remove the clothing from the washer to reduce wrinkling.
- If the washer includes lint filters, remember to check lint filters after every 2 to 3 loads.

Sorting Laundry

Grouping Similar Items

For the best washing results, and to reduce the possibility of damage to clothing, sort clothing into loads made up of similar items.

Mixing different fabric types and/or soil levels can result in poor wash performance, color transfer, discoloration, fabric damage or linting. Fabrics should be sorted into groups as described below.

Colors
Sort articles by color. Wash dark clothes separately from light colors or whites. Mixing dark clothes with light clothes can result in dye transfer or discoloration of the lighter clothes.

Soil Level
Wash heavily soiled clothing together. Washing lightly soiled clothing in the same load with heavily soiled clothing could result in poor wash performance for the lightly soiled clothing.

Fabric Type
Delicate articles should not be mixed with heavy or sturdy fabric types. Washing heavy fabrics with delicates can result in poor wash performance for the heavy fabrics and possible damage to the delicates.

Lint Type
Some fabrics attract and bind lint to them while others give off lint in the laundry process. Avoid mixing these lint collectors and lint producers in the same load. Mixing these fabrics will result in pilling and linting on the lint collectors. (For example, lint collector - knit sweater; lint producer - terry cloth towels.)

How to Sort Laundry

By Colors	By Soil	By Fabric	By Lint
Whites	Heavy	Delicates	Lint Producer
Lights	Normal	Easy Care	Lint Collector
Darks	Light	Sturdy	

CAUTION

- The washer can be fully loaded, but the tub should not be tightly packed with items. The lid of the washer should close easily.
- Use the **Bedding** cycle for buoyant or nonabsorbent items such as pillows or comforters. Failure to follow this caution can result in leakage.
- Clothing or articles that are waterproof or water resistant must be washed in the **Waterproof** cycle only. (Examples include water resistant clothing, mattress covers, outdoor clothes, and plastic mats.) Using another cycle may result in personal injury or damage to the washer, clothes, walls, floor, and surrounding objects due to abnormal vibration.

Fabric Care Labels

Many articles of clothing include a fabric care label. Using the chart below, adjust the cycle and option selections to care for your clothing according to the manufacturer's recommendations.

Category	Label	Directions
Washing		Hand wash
		Machine wash, Normal cycle
		Perm Press/Wrinkle Resistant setting (which has a cool down or cold spray before the slower spin)
		Gentle/Delicate setting (slow agitation and/or reduced wash time)
		Do not wash
		Do not wring
Water Temperature	•••	Hot
	••	Warm
	•	Cold/Cool
Bleach Symbols		Any bleach (when needed)
		Only non-chlorine bleach (when needed)
		Do not bleach

Loading the Washer

General Tips

- Check and empty pockets. Paper clips, coins, matches, and other items can damage clothing and the washer.
- Close zippers and hooks, and tie drawstrings to prevent snagging or tangling of clothes.
- Pretreat heavily stained areas for best results.
- Brush off heavy soil, dust, and hair from items before washing. Excess dirt or sand can abrade other fabrics and lead to poor wash performance.
- Combine large and small items in the tub. Load large items first. Large items should not be more than half of total load.

- For best results, load dry items only. If washing very wet items, wring out excess water before loading, or run a **Spin Only** cycle to extract excess water before adding detergent and starting the desired cycle.
- The washer can be fully loaded, but the tub should not be tightly packed with items. The lid of the washer must close easily.

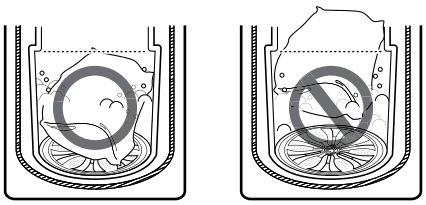

- The washer will not fill or operate with the lid open.
- Do not overload the tub. Clothes should fit loosely in the tub under the maximum fill line ❶. Loading clothes over the fill line may result in damage to clothing and the washer.
  - Do not press down on items while stacking them in the tub.
  - Load clothes loosely, and do not overfill the tub. Clothes need room to circulate in order to get clean.

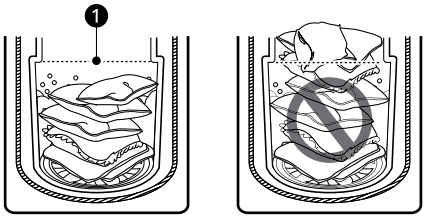

Bulky Items

- Do not wash entire pillows or cushions. Remove pillow or cushion inserts and wash the covers only.
- Use the **Bedding** cycle for large or bulky items such as poly-filled jackets, comforters, pillows, etc. These items may not be as absorbent as other laundry items and should be sorted into a separate wash load for best performance.
- Bulky items should be placed as far down in the tub as possible for best performance. Always place buoyant items at the bottom of the tub. The washer will automatically detect the load size. Because of the high efficiency wash system, the water level may not completely cover the load.

Small Items

- Do not wash a single small item. Add enough similar items to the load to prevent an out-of-balance load.
- Wash small, light items in a mesh bag. Small items can get caught in the impeller at the bottom of the tub, and brassiere hooks can damage other items or the tub.

General Tips for Models with an Impeller

If the appliance uses a low profile rotating hub in the drum, follow these instructions when loading the washer.

- For best performance, load clothes as shown.

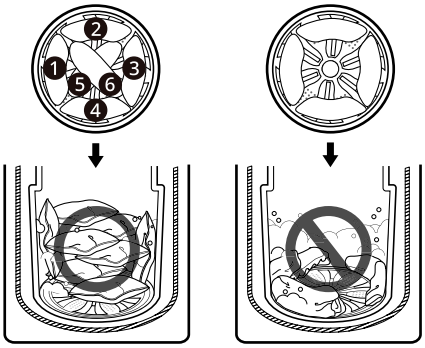

- Wash thick, bulky items individually. Heavy blankets, comforters, bedspreads, or pet beds can get tangled or cause an unbalanced load if combined with other items.

Adding Cleaning Products

About Detergent Use

This washer is designed for use with only HE (High-Efficiency) detergents.

- HE detergents produce fewer suds, dissolve more efficiently to improve washing and rinsing performance, and help to keep the interior of the washer clean. Using detergent that is not HE may cause oversudsing and unsatisfactory performance which could result in error codes, cycle failure, and washer damage.
- Detergents designated as HE-compatible may not provide optimal results.

- For proper wash performance, always measure detergent using the measuring device provided by the detergent manufacturer. For an average load, use less than half of the recommended maximum. Use less detergent for soft water, light soil, or smaller loads.
- Use extra care when measuring 2X and 3X concentrated detergents because even a small amount of extra detergent can lead to problems.
- Never use more than the maximum amount of detergent recommended by the manufacturer. Using too much detergent can lead to oversudsing, poor rinsing, detergent buildup in clothing, and residue buildup that can contribute to odors in the washer.
- Do not use more than one single-use detergent pack or detergent tablet in the washer. Using too much detergent may cause oversudsing and unsatisfactory performance. Reduce detergent amount or add an extra rinse if detergent residue is left on fabrics. To add an extra rinse, select the **Extra Rinse** option.

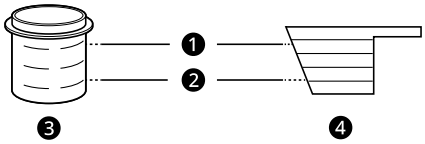

❶ Maximum fill line

❷ Average load fill line

❸ Liquid detergent

❹ Powdered detergent

Single-Use Detergent Packs / Gel or Tablet Detergents

Place liquid or powdered detergent packs, or gel or tablet detergents, in the tub before loading laundry. Do not place these detergents in the dispenser.

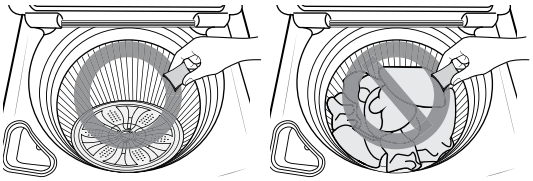

About the Dispensers

The automatic dispenser consists of two compartments which hold:

- Liquid fabric softener
- Liquid or powdered detergent for main wash

⚠ CAUTION

- Do not place or store laundry products, such as detergent, bleach, or liquid fabric softener, on top of your washer. These products can damage the washer's finish and controls.

NOTE

- Follow the manufacturer's recommendations when adding cleaning products.

Using the Detergent and Softener Dispenser Drawer

To add detergent and fabric softener to the automatic dispenser drawer:

1 Open the dispenser drawer.

2 Load the laundry products into the appropriate compartments.

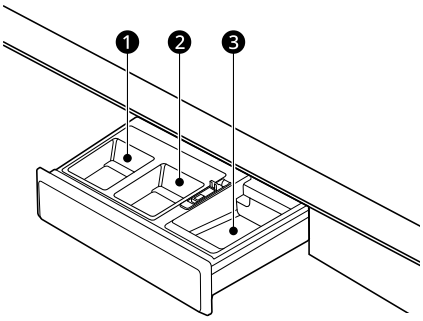

❶ Liquid fabric softener compartment

❷ Main wash liquid detergent compartment

❸ Main wash powdered detergent compartment

3 Gently close the detergent dispenser drawer before starting the cycle.

- Slamming the drawer closed may result in the detergent overflowing into another compartment or dispensing into the drum earlier than programmed.
- Be careful not to get a hand caught in the drawer while closing.

- It is normal for a small amount of water to remain in the dispenser compartments at the end of the cycle.

Main Wash Detergent Compartment

This compartment holds laundry detergent for the main wash cycle. Either powdered or liquid detergent may be used in this compartment.

- The detergent is added to the load at the beginning of the cycle. Always use HE (High-Efficiency) detergent with your washer.
- Do not exceed the maximum fill line. Using too much detergent can result in detergent buildup in clothing and the washer.
- Liquid or powdered color-safe bleach may be added to the main wash compartment with detergent of the same type. Do not mix liquids and powders.
- If you use a detergent that does not dissolve easily or a detergent with high viscosity, it will leave a residue and clog the dispenser.

Fabric Softener Compartment

This compartment holds liquid fabric softener, which is automatically dispensed during the final rinse cycle.

- Do not exceed the maximum fill line. Using too much fabric softener may stain clothes.
- Dilute concentrated fabric softeners with warm water.
- Never pour fabric softener directly onto the load or into the tub.

Using the Liquid Bleach Dispenser

The bleach dispenser is a separate compartment at the left front of the tub opening.

⚠ WARNING

- Do not mix chlorine bleach with ammonia or acids such as vinegar or rust/scale remover. Mixing chemicals like these can produce a lethal gas, resulting in severe injury or death.

NOTE

- Do not add powdered bleach to this dispenser. The bleach dispenser is designed to dispense liquid bleach only. Powdered or liquid color-safe bleach will not dispense properly.
- Do not place laundry items on top of the bleach dispenser when loading and unloading the washer.
- Never add more than **one cup** of bleach and do not exceed the maximum fill line since this can cause the bleach to be dispensed immediately. Using too much bleach can damage fabrics.
- Never pour undiluted liquid chlorine bleach directly onto the load or into the tub. Fabric damage can occur.
- Do not use color-safe bleach or Oxi products in the same cycle with liquid chlorine bleach.

1 Check clothing care labels for special instructions.

2 Measure liquid bleach carefully, following the instructions on the bottle.

- HE (High-Efficiency) washers use less water, so less bleach is needed. **One half cup** is enough for most loads.

3 Carefully pour the pre-measured amount of bleach directly into the bleach dispenser.

- If you are using powdered bleach of any kind, pour it directly into the tub before adding the laundry.
- Never add powdered bleach to the liquid bleach dispenser.

Immediate Bleach Dispenser

When you pour the bleach into the bleach dispenser, the bleach is immediately added to the tub as it fills with water, safely diluting the bleach.

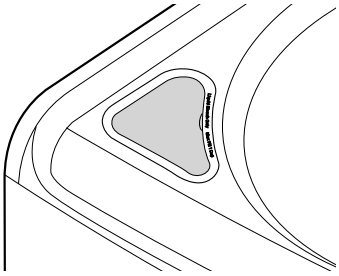

Control Panel

Control Panel Features

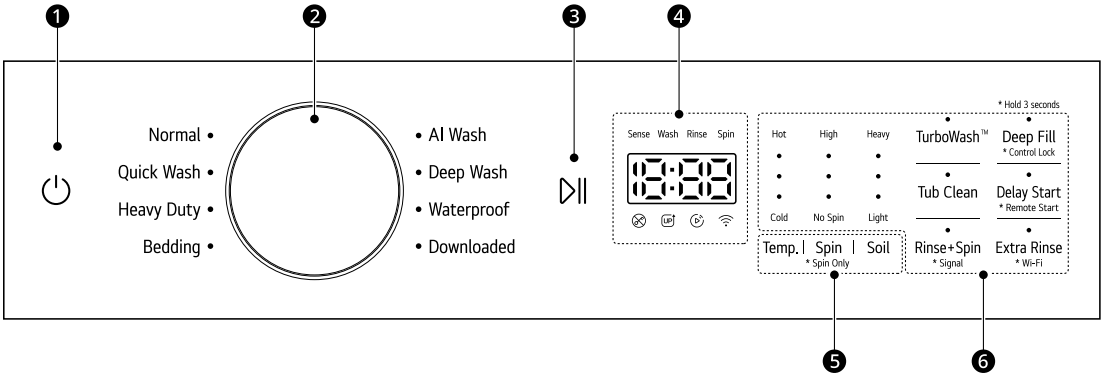

❶ Power On/Off Button

- Press this button to turn the washer on or off.
- Pressing this button during a cycle will cancel that cycle and any load settings will be lost.
- The door will unlock after a brief pause.

NOTE

- If there is any water remaining in the drum after the washer shuts off, it will drain after a delay. The washer can be restarted at any time before the drain begins. However, once the water begins to drain, all functions will be suspended until the water has been completely drained and the washer shuts off.

❷ Cycle Selector Knob

- Turn this knob to select the desired cycle.
- Once the desired cycle has been selected, the standard presets will appear in the display. These settings can be adjusted using the **Cycle Modifier** buttons at any time before starting the cycle.

❸ Start/Pause Button

- Press this button to start the selected cycle.
- If the washer is running, use this button to pause the cycle without losing the current settings.

NOTE

- If the **Start/Pause** button is not pressed to start the selected cycle, after a delay the washer automatically turns off and all cycle settings are lost. Any water remaining in the drum will be drained.

❹ Time and Status Display

❺ Cycle Modifier Buttons

- Use these buttons to adjust the wash temperature, spin speed and soil level settings for the selected cycle.
- The current settings are shown in the display.
- Press the button for the desired modifier to select other settings.

❻ Option and Extra Function Buttons

- These buttons allow you to select additional cycle options. Certain buttons also allow you to activate special functions by pressing and holding the button for **3 seconds**.

Time and Status Display

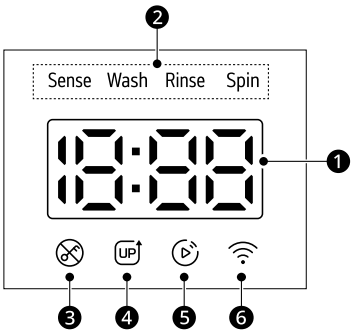

❶ Estimated Time Remaining

- When a cycle is selected, the default time for that cycle is displayed. This time will change as modifiers or options are selected.
- If the display shows `---`, then the time will be displayed after the load sensing has detected the load size.
- The time shown is only an estimate. This time is based on normal operating conditions. Several external factors (load size, room temperature, incoming water temperature, etc.) can affect the actual time.

NOTE

- Once the **Start/Pause** button is pressed, the washer will measure the size of the load. The estimated time may change once the load size has been measured.
- If the **Delay Start** function is set, the remaining delay time counts down until the cycle begins.

❷ Cycle Status Indicators

- These LEDs will blink when a cycle is selected to indicate which stages will run.
- When a cycle is running, the LED for the active stage will blink, and the LEDs for the remaining stages will remain steady. Once a stage is complete, the LED will turn off. If a cycle is paused, the active stage LED will stop blinking.

❸ Door Lock Indicator

- This indicator lights up when the cycle starts and the door is locked.
- The indicator light stays on until the cycle is paused, stopped or has finished.

❹ Upgrade Indicator

- This indicator lights up when upgradeable features are released.

❺ Remote Start Indicator

- This indicator lights up when the **Remote Start** feature is activated.

❻ Wi-Fi Indicator

- This indicator is lit when the product is connected to a home Wi-Fi network.

Wash Cycles

The wash cycles are designed for specific types of wash loads. Select the cycle that best matches the load contents for maximum wash performance and fabric care.

See the **Sorting Laundry** section for best results, and follow the fabric care labels on your garments. For a guide to fabric care symbols, see the **Sorting Laundry** section.

Cycle Guide

Turn the knob or press the button to select the desired cycle. When you select a wash cycle, the light for the corresponding wash cycle will turn on.

NOTE

- Whenever load weights are mentioned, assume 1 lb (0.45 kg) = 1 thick bath towel (dry).

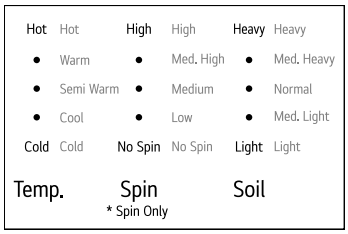

- **Temp.**: **Cold** > **Cool** > **Semi Warm** > **Warm** > **Hot**
- **Spin** : **No Spin** > **Low** > **Medium** > **Med. High** > **High**
- **Soil** : **Light** > **Med. Light** > **Normal** > **Med. Heavy** > **Heavy**

Cycle	Normal	
Description	Use to wash all normal items such as cotton, linen, shirts, jeans or mixed loads, except delicate fabrics such as wool or silk. • Pressing the **Start/Pause** button without selecting a cycle will cause the **Normal** cycle to begin immediately, using the default settings.	
Wash Temp.	Default: **Warm**	Available: All
Spin Speed	Default: **Med. High**	Available: **High**, **Med. High**, **Medium**, **No Spin**
Soil Level	Default: **Normal**	Available: All

Cycle	Quick Wash	
Description	Use this option to quickly wash lightly soiled clothing and small loads. For high wash and rinse efficiency, wash small loads of 2-3 lightly soiled garments. • Use very little detergent in this cycle. To add an extra rinse, use the **Extra Rinse** button.	
Wash Temp.	Default: **Warm**	Available: **Warm**, **Semi Warm**, **Cool**, **Cold**
Spin Speed	Default: **Med. High**	Available: All
Soil Level	Default: **Light**	Available: All

Cycle	Heavy Duty
Description	Suitable for washing heavily soiled laundry, such as cotton fabrics, using more powerful wash motions. • When washing large loads, there will be brief periods of 2 minutes or more without agitation. These soak periods are part of the cycle’s design, and are normal.

Cycle	Heavy Duty	
Wash Temp.	Default: **Warm**	Available: All
Spin Speed	Default: **Med. High**	Available: All
Soil Level	Default: **Heavy**	Available: All

Cycle	Bedding	
Description	Suitable for washing blankets or bulky items which have difficulty absorbing water, such as pillows, blankets, comforters, sheets or pet bedding. • Do not use this cycle to wash a mixed load of bedding and non-bedding items. • Do not mix large/bulky items with smaller articles of clothing. • Do not wash excessively large items. If large/bulky items do not fit easily into the tub, there may not be enough room for them to move during washing.	
Wash Temp.	Default: **Warm**	Available: All
Spin Speed	Default: **Low**	Available: **Medium**, **Low**, **No Spin**
Soil Level	Default: **Normal**	Available: All

Cycle	AI Wash	
Description	This cycle adjusts wash and rinse patterns automatically after detecting load size.	
Wash Temp.	Default: **Warm**	Available: All
Spin Speed	Default: **Med. High**	Available: All
Soil Level	Default: **Normal**	Available: **Normal**

Cycle	Deep Wash	
Description	Provides additional water and washes heavily soiled mixed items, except delicate fabrics.	
Wash Temp.	Default: **Warm**	Available: All
Spin Speed	Default: **Medium**	Available: All
Soil Level	Default: **Normal**	Available: All

Cycle	Waterproof	
Description	Suitable for washing waterproof items such as water resistant clothing, mattress covers, outdoor clothes, and plastic mats. (less than 14 lb) **NOTE** • Do not use any other wash cycle to wash waterproof items. • Do not use this cycle to wash a mixed load of waterproof and non-waterproof items. • Check the fabric care label on the garments before using this cycle. • Do not wash other fabrics using this cycle.	
Wash Temp.	Default: **Warm**	Available: **Warm**, **Semi Warm**, **Cool**, **Cold**
Spin Speed	Default: **Low**	Available: **Low**, **No Spin**

Cycle	Waterproof	
Soil Level	Default: **Light**	Available: All

Cycle	Downloaded (Delicates)	
Description	You can use a smartphone to download a specialized cycle to this cycle position. • The default cycle is **Delicates**, suitable for washing dress shirts/blouses, nylons, lingerie, or sheer and lacy clothes which can easily be damaged. (**less than 8 lb**) • Refer to the **LG ThinQ** application to see the cycles available for download.	
Wash Temp.	Default: **Cold**	Available: **Warm**, **Semi Warm**, **Cool**, **Cold**
Spin Speed	Default: **Low**	Available: **Low**, **No Spin**
Soil Level	Default: **Light**	Available: All

Available Options

† This option is automatically included in the cycle and cannot be deselected.

NOTE

- **Delay Start** and **Extra Rinse** can be selected for every cycle in this table.

Cycle	TurboWash™	Deep Fill
Normal	●†	●
Quick Wash	●†	●
Heavy Duty	●	●
Bedding		
AI Wash	●	
Deep Wash		●
Waterproof		●
Downloaded Default : **Delicates**		●

Cycle Modifiers

About Modifier Buttons

Each cycle has default settings that are selected automatically. You can also customize these settings using the cycle modifier buttons.

- Repeatedly press the button for the desired modifier until the indicator light for the desired setting is lit.
- The washer automatically adjusts the water level for the type and size of wash load for best results and maximum efficiency.
- This is a high-efficiency washer, and the water levels may be much lower than you expect. This is normal, and cleaning/rinsing performance will not be compromised.

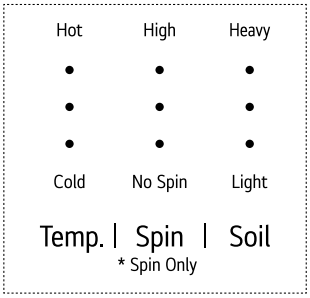

NOTE

- The LED next to the setting lights up when the setting is selected.
- To protect your garments, not every wash temperature, spin speed, soil level, or option is available with every cycle.
- A chime will sound twice and the LED will not light if the desired setting is not allowed for the selected cycle.
- Follow the fabric care labels on the garment for best results.

Temp.

Make sure the water temperature is suitable for the type of load you are washing.

- Press the **Temp.** button repeatedly to select the wash temperature combination for the selected cycle.
- All rinses use unheated cold water.
- Cold rinses use less energy. The actual cold rinse temperature depends on the temperature of the cold water at the faucet.

Spin

Higher spin speeds extract more water from clothes, reducing drying time and saving energy.

- Press the **Spin** button repeatedly until the desired speed is selected.
- Some fabrics, such as delicates, require a slower spin speed. To protect your clothing, not all spin speeds are available for all cycles.

Spin Only

This option spins the load without a wash or rinse cycle. This is useful for spinning dry hand washables.

- Press the **Spin** button for 3 seconds.

Soil

Adjusting the soil level setting will modify the cycle times and/or wash actions.

- Press the **Soil** button repeatedly until the desired soil level is selected.
- The **Heavy** soil setting may increase cycle times. The **Light** soil setting may decrease cycle times.

Options and Extra Functions

Your washer includes several additional cycle options to customize cycles to meet your individual needs.

- Select the desired option after selecting the desired cycle and settings.

NOTE

- The LED for the option will light when the option is selected.
- To protect your garments, not every option is available with every cycle.
- A chime will sound twice and the LED will not light if the selected option is not allowed for the selected cycle.

TurboWash™

Adding this option reduces the cycle time while still providing similar wash performance to the same cycle without **TurboWash™**.

NOTE

- This option cannot be used with all cycles.

Rinse+Spin

Select this option to rinse and spin a load separately from a regular cycle. This can be helpful in preventing fresh stains from setting in fabrics.

Signal

The washer plays a melody when the wash cycle is finished. The buttons make a sound each time they are pressed.

- Press and hold the **Rinse+Spin** button for 3 seconds to turn the sounds on or off.
- When no signal is heard, the signal is off.

Deep Fill / Max.

Adding Extra Water

For better wash performance, press the **Deep Fill** button once before starting a cycle to add extra water to the cycle.

Adding the Maximum Amount of Water

To add the maximum amount of water to a cycle, press the **Deep Fill** button twice before starting the cycle. When **Max.** is selected, FuLL is displayed.

NOTE

- Using the **Deep Fill** or **Max.** option increases the cycle time because of the added fill time required.
- To add water during a cycle, pause the cycle before selecting **Deep Fill** or **Max.**.
- If the washer has already reached its maximum fill level, pressing **Deep Fill** or **Max.** has no effect.
- If you add the **Deep Fill** or **Max.** option to the **Normal** cycle, it automatically changes to the **Deep Wash** cycle before starting. You cannot select the **Deep Fill** or **Max.** option for the **Normal** cycle.
- If the **Deep Fill** option is selected through the **LG ThinQ** app, it operates as **Max.**.

Control Lock

Use this function to disable the controls. This function can prevent children from changing cycles or operating this washer.

NOTE

- The function does not lock the door.
- Once this function is set, all buttons are locked except the **Power** button.
- When the controls are locked, CL and the remaining time are alternately shown on the display during the wash cycle.
- Turning off the power will not reset this function. You must deactivate this function before you can access any other options and functions.

Locking the Control Panel

1. Turn on the power.
2. Press and hold the **Deep Fill** button for 3 seconds to activate this function.

Unlocking the Control Panel

1. Turn on the power.
2. Press and hold the **Deep Fill** button for 3 seconds to deactivate this function.
   - When this function is deactivated, a chime will sound and the remaining time for the current cycle will reappear on the display.

Delay Start

Once you have selected the cycle and other settings, press this button to delay the start of the wash cycle.

- Each press of the button increases the delay time by 1 hour, for up to 19 hours.
- Once the desired delay time is set, press the **Start/Pause** button to start the delay time.

NOTE

- If the **Start/Pause** button is not pressed to begin the delay time, the washer automatically turns off after a certain time and all cycle settings are lost.

Extra Rinse

This option adds an extra rinse to the selected cycle. Use this option to help ensure the removal of detergent or bleach residue from fabrics.

- Pressing the **Extra Rinse** button twice will add two additional rinses to the cycle.
- If a liquid fabric softener is used, it is always dispensed in the final rinse.

NOTE

- You cannot select this option with the **Spin Only** option and **Tub Clean** cycle.
- Selecting the **Extra Rinse** option with the **Normal** cycle automatically changes the cycle to the **Deep Wash** cycle.

Spin Only

Use this option to spin clothes and drain the water from the tub.

- Use this option to drain water if the wash cycle is interrupted by a power failure or to spin dry hand-washed items.

1 Press the **Power** button to turn on the washer.

- Do not select a cycle.

2 Press and hold the **Spin** button for 3 seconds.

- You can change the spin speed by pressing the **Spin** button.

3 Press the **Start/Pause** button to begin.

SMART FUNCTIONS

LG ThinQ Application

The **LG ThinQ** application allows you to communicate with the appliance using a smartphone.

LG ThinQ Application Features

For products that contain the Wireless LAN module

- **Remote Start**
  - Control the appliance remotely from the **LG ThinQ** application.
- **Downloaded**
  - Download new and specialized cycles that are not included in the standard cycles on the appliance.
- **Tub Clean Coach**
  - This function shows how many cycles remain before running the **Tub Clean** cycle.
- **Energy Monitoring**
  - This feature keeps track of how the washer's power consumption is affected by selected washing cycles and options.
- **Smart Diagnosis**™
  - This function provides useful information for diagnosing and solving issues with the appliance based on the pattern of use.
- **Settings**
  - Allows you to set various options on the appliance and in the application.
- **Push Alerts**
  - When the cycle is complete or the appliance has problems, you will receive a push message.

NOTE

- In the following cases, you must update the network information for each appliance in the **LG ThinQ** application under **Device Cards** > **Settings** > **Change Network**.
  - wireless router is changed
  - wireless router password is changed
  - Internet service provider is changed
- This information is current at the time of publication. The application is subject to change for product improvement purposes without notice to users.

Installing LG ThinQ Application and Connecting an LG Appliance

Models with QR Code

Scan the QR code attached to the product using the camera or a QR code reader app on your smartphone.

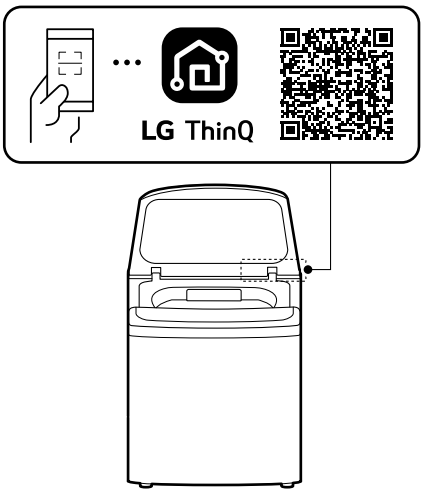

Models without QR Code

1. Search for and install the **LG ThinQ** app from the Google Play Store or Apple App Store on a smartphone.

2. Run the **LG ThinQ** app and sign in with your existing account or create an LG account to sign in.

3. Touch the add (+) button on the **LG ThinQ** app to connect your LG appliance. Follow the instructions in the app to complete the process.

NOTE

- You may be asked to provide a password to connect to the LG network (not your home network) during the Wi-Fi setup. The password is the last 4 characters of the network name, repeated twice, with no spaces. For example, if the network name appears as LG_XXXX_8b92, then you would enter 8b928b92 as your password. The password is case sensitive and

the last 4 characters are unique to your appliance.

- To verify the Wi-Fi connection, check that the icon on the control panel is lit.
- The appliance supports 2.4 GHz Wi-Fi networks only. To check your network frequency, contact your Internet service provider or refer to your wireless router manual.
- **LG ThinQ** is not responsible for any network connection problems or any faults, malfunctions, or errors caused by network connection.
- If the appliance is having trouble connecting to the Wi-Fi network, it may be too far from the router. Purchase a Wi-Fi repeater (range extender) to improve the Wi-Fi signal strength.
- The Wi-Fi connection may not connect or may be interrupted because of the home network environment.
- The network connection may not work properly depending on the Internet service provider.
- The surrounding wireless environment can make the wireless network service run slowly.
- If the appliance cannot be connected due to problems with the wireless signal transmission, unplug the appliance and wait about a minute before trying again.
- The wireless network name (SSID) should be a combination of English letters (A-Z) and numbers (0-9). Do not use special characters.
- Smartphone user interface (UI) may vary depending on the mobile operating system (OS) and the manufacturer.
- If the security protocol of the router is set to **WEP**, network setup may fail. Change the security protocol (**WPA2** is recommended) and connect the product again.

Using the Appliance Remotely

Remote Start

Use a smartphone to control your appliance remotely. You can also monitor your cycle operation so you know how much time is left in the cycle.

Using Remote Start

1 Put the laundry in the drum and add detergent to the detergent dispenser drawer.
   - If desired, add bleach or fabric softener to the appropriate areas of the dispenser.

2 Press the **Power** button.

3 Press and hold the **Remote Start** button for 3 seconds to enable the remote control function.

4 Start a cycle from the **LG ThinQ** application on your smartphone.

NOTE

- Once this function is enabled, you can only start a cycle from the **LG ThinQ** smartphone application. If the cycle is not started, the appliance will wait to start the cycle until it is turned off remotely from the application or the remote function is disabled.
- If the door has been opened, you cannot start a cycle remotely.

Disabling Remote Start Manually

When the function is activated, press and hold the **Remote Start** button for 3 seconds.

Download Cycle

You can download new and specialized cycles that are not included in the standard cycles on the appliance.

Appliances that have been successfully connected can download a variety of specialty cycles specific to the appliance.

Once cycle download is completed in the appliance, the product keeps the downloaded cycle until a new cycle is downloaded.

NOTE

- Only one downloaded cycle can be stored on the appliance at a time.

Update Your Product

You can update your product with new features through the **LG ThinQ** app.

- When new features are available, an update notification will appear on the control panel as shown below when you turn on the product.

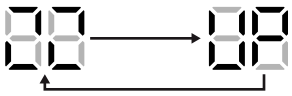

- After the update, the product function may change from what is indicated in the user manual.

1 Once you get an update notification, you will also receive an update notification on your smartphone.

2 Tap the update notification on your smartphone to enter the **Feature Updates** screen in the **LG ThinQ** app.

3 Once you enter the **Feature Updates** screen, select the new features and tap the **update** button.
   - The progress of the update can be checked on the product's control panel.
   - Do not unplug the power plug of the product during the update, as it will interrupt the process.

4 After the update, to change the detailed settings of the updated features, refer to the guide within the **LG ThinQ** app.

Radio Equipment Specifications

Type	Operating Frequency Range	Output Power (Max.)
Wireless LAN	2400 MHz - 2472 MHz	< 1 W
Bluetooth†	2400 MHz - 2483.5 MHz	

† This feature is only available on some models.

FCC Notice

The following notice covers the transmitter module contained in this product.

This equipment has been tested and found to comply with the limits for a Class B digital device, pursuant to Part 15 of the FCC Rules. These limits are designed to provide reasonable protection against harmful interference in a residential installation. This equipment generates, uses, and can radiate radio frequency energy and, if not installed and used in accordance with the instructions, may cause harmful interference to radio communications. However, there is no guarantee that interference will not occur in a particular installation. If this equipment does cause harmful interference to radio or television reception, which can be determined by turning the equipment off and on, the user is encouraged to try to correct the interference by one or more of the following measures:

- Reorient or relocate the receiving antenna.
- Increase the separation between the equipment and the receiver.
- Connect the equipment to an outlet on a circuit different from that to which the receiver is connected.
- Consult the dealer or an experienced radio/TV technician for help.

This device complies with part 15 of the FCC Rules. Operation is subject to the following two conditions:

(1) This device may not cause harmful interference and

(2) This device must accept any interference received, including interference that may cause undesired operation.

Any changes or modifications in construction of this device which are not expressly approved by the party responsible for compliance could void the user’s authority to operate the equipment.

FCC RF Radiation Exposure Statement

This equipment complies with FCC radiation exposure limits set forth for an uncontrolled environment. This transmitter must not be co-located or operating in conjunction with any other antenna or transmitter.

This equipment should be installed and operated with a minimum distance of 20 cm (7.8 inches) between the antenna and your body. Users must follow the specific operating instructions for satisfying RF exposure compliance.

Industry Canada Statement

This device contains licence-exempt transmitter(s)/ receiver(s) that comply with Innovation, Science and Economic Development Canada’s licence-exempt RSS(s). Operation is subject to the following two conditions:

(1) This device may not cause interference.

(2) This device must accept any interference, including interference that may cause undesired operation of the device.

IC Radiation Exposure Statement

This equipment complies with IC radiation exposure limits set forth for an uncontrolled environment.

This equipment should be installed and operated with a minimum distance of 20 cm (7.8 inches) between the antenna and your body.

NOTE

- THE MANUFACTURER IS NOT RESPONSIBLE FOR ANY RADIO OR TV INTERFERENCE CAUSED BY UNAUTHORIZED MODIFICATIONS TO THIS EQUIPMENT. SUCH MODIFICATIONS COULD VOID THE USER'S AUTHORITY TO OPERATE THE EQUIPMENT.

Open Source Software Notice Information

To obtain the source code that is contained in this product, under GPL, LGPL, MPL, and other open source licenses that have the obligation to disclose source code, and to access all referred license terms and copyright notices, please visit https://opensource.lge.com.

LG Electronics will also provide open source code to you for a charge covering the cost of performing such distribution upon email request to opensource@lge.com.

This offer is valid to anyone in receipt of this information for a period of three years after our last shipment of this product.

Smart Diagnosis™ Function

Use this feature to help you diagnose and solve problems with your appliance.

NOTE

- For reasons not attributable to LGE's negligence, the service may not operate due to external factors such as, but not limited to, Wi-Fi unavailability, Wi-Fi disconnection, local app store policy, or app unavailability.
- The feature may be subject to change without prior notice and may have a different form depending on where you are located.

Using LG ThinQ to Diagnose Issues

If you experience a problem with your Wi-Fi equipped appliance, it can transmit troubleshooting data to a smartphone using the **LG ThinQ** application.

- Launch the **LG ThinQ** application and select the **Smart Diagnosis™** feature in the menu. Follow the instructions provided in the **LG ThinQ** application.

Using Audible Diagnosis to Diagnose Issues

Follow the instructions below to use the audible diagnosis method.

- Launch the **LG ThinQ** application and select the **Smart Diagnosis™** feature in the menu. Follow the instructions for audible diagnosis provided in the **LG ThinQ** application.

1. Press the **Power** button to turn on the appliance.
   - Do not press any other buttons.

2. Hold the mouthpiece of your phone close to the **Power** button.

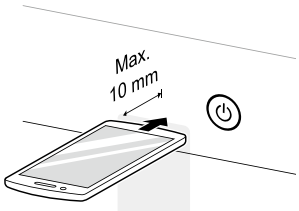

3. Press and hold the **Temp.** button for 3 seconds or longer while continuing to hold your phone near the **Power** button.

4. Keep the phone in place until the tone transmission has finished. The display will count down the time. Once the countdown is over and the tones have stopped, the diagnosis will be displayed in the application.

NOTE

- For best results, do not move the phone while the tones are being transmitted.

MAINTENANCE

WARNING

- To reduce the risk of fire, electric shock, or injury to persons, read this entire owner's manual, including the **SAFETY INSTRUCTIONS**, before operating this appliance.
- Unplug the appliance before cleaning to avoid the risk of electric shock. Failure to follow this warning can cause serious injury, fire, electric shock, or death.
- Do not use volatile substances (benzene, paint thinner, alcohol, acetone, etc.), abrasive cleaners, or detergents with strong chemical components when cleaning the appliance. Doing so may cause discoloration or damage to the appliance, or may cause a fire.
- Certain internal parts are intentionally not grounded and may present a risk of electric shock only during servicing. Service personnel - Do not contact the following parts while the appliance is energized: pump, motor, noise filter cover, and heater (on applicable models).

Regular Cleaning

Care after Wash

- Always remove items from the washer as soon as the cycle is complete. Leaving damp items in the washer can cause wrinkling, color transfer, and odor.
- After the cycle is finished, wipe the lid and the inside of the lid seal to remove any moisture.
  - Wipe the body of the washer with a dry cloth to remove any moisture.
  - Leave the lid open to dry the tub interior.

NOTE

- Make sure children and pets do not climb into the tub. Engage the **Control Lock** feature if needed to prevent children from accidentally starting a wash cycle.

Cleaning the Exterior

Proper care of your washer can extend its life.

Lid:

- Wash with a damp cloth on the outside and inside and then dry with a soft cloth.

Exterior:

- Immediately wipe off any spills.
- Wipe with a damp cloth.
- Do not touch the surface or the display with sharp objects.
- To remove fingerprints, wipe with a soft cloth.

Periodic Maintenance

Cleaning the Tub

Over time, residue may build up in the tub, leading to mildew or a musty odor. Run the **Tub Clean** cycle **monthly** to remove residue and prevent odor.

NOTE

- Make sure to run the **Tub Clean** cycle only when the tub is empty. Never load laundry while using this cycle. The laundry may be damaged or contaminated with cleaning products.
- Run the cycle more often under heavy use conditions or if odor is already present.
- If mildew or musty smell already exists, run this cycle once a week for three consecutive weeks.

1 Remove any clothing from the tub.

2 Adding cleaning agents.

Cleaner	Instructions
Tub cleaner	Follow manufacturer's recommendations.
Lime scale remover	
Liquid chlorine bleach	Add to main wash liquid detergent dispenser.
Powdered cleaner	Follow manufacturer's recommendations.
Cleaning tablets	Place directly into the washer tub.

- For other tub cleaning products, follow the cleaner manufacturer's instructions and recommendations.
- Do not exceed the maximum fill line when adding bleach or powdered cleaners. Powdered cleaners may remain in the tub after cleaning.

3 Close the lid and press the **Power** button to turn on the washer.

4 Turn the knob or press the cycle buttons to select the **Tub Clean** cycle then press the **Start/Pause** button to begin the cycle.

5 After the cycle ends, open the lid and allow the tub interior to dry completely.

WARNING

- Make sure children and pets do not climb into the tub. Engage the **Control Lock** feature if needed to prevent children from accidentally starting a wash cycle.

NOTE

- If you use a descaler or tub cleaner during the **Tub Clean** cycle, use the **Rinse+Spin** option to rinse the washer tub before running your next wash cycle.

Removing Mineral Buildup

In areas with hard water, mineral scale can form on internal components of the washer. Periodically clean the mineral buildup on the internal components to extend the lifespan of the washer. Use of a water softener is recommended in areas with hard water.

- Use a descaler to remove visible mineral buildup on the washer tub.
- After descaling, always run the **Tub Clean** cycle before washing clothing.
- Mineral scale and other spots may be removed from the stainless steel tub using a soft cloth soaked in stainless steel cleaner.
- Do not use steel wool or abrasive cleaners.

Leaving the Lid Open

After you finish using the washer, leave the lid open overnight to allow air to circulate and dry the tub. This helps prevent odors.

Cleaning the Dispenser Drawer

Detergent and fabric softener may build up in the dispenser drawer. Remove the drawer and inserts and check for buildup **once or twice a month**.

WARNING

- Do not spray water inside the washer. Doing so may cause fire or electric shock.

1 Turn off the washer, and unplug the power cord.

2 Slide the drawer straight out until it stops. Press the button at the back of the drawer, lift the front of the drawer, and pull the drawer completely out.

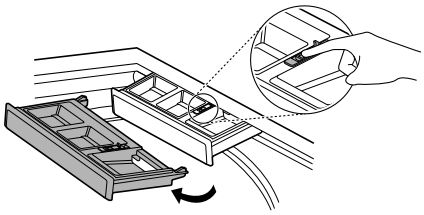

3 Remove the insert from the compartment.

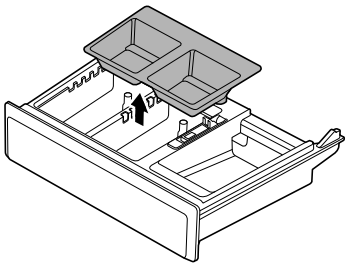

4 Clean the inserts and drawer with warm water.

- Use a soft cloth or brush to clean and remove any residue.
- Do not use soap when cleaning the drawer and inserts.

5 Wipe off any moisture with a dry towel or cloth after cleaning.

6 To clean the drawer opening, use a small, non-metal brush to clean the recess. Remove all residue from the upper and lower parts of the recess.

7 Return the inserts to the proper compartments and replace the drawer.

- Hold the drawer with the front raised and angle the rail stops past the opening. Then lower the drawer into place. Hold the drawer by the front corners and push it in firmly until the rail stops snap into place. Then slide the drawer in completely.

Cleaning the Bleach Dispenser

Bleach may build up on the bleach dispenser. Check for buildup and clean the dispenser with warm water **once or twice a month**.

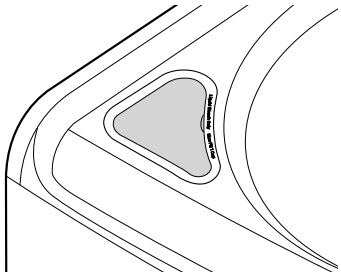

Cleaning the Water Inlet Filters

If the washer does not fill properly, an error message will appear on the display. The inlet valve filter screens could be clogged by hard water scale, sediment in the water supply, or other debris.

⚠ WARNING

- The inlet screens protect the delicate parts of the inlet valve from being damaged by particles that could enter the valves with the water supply. Operating the washer with these filters removed could cause a valve to open continuously, resulting in flooding and/or property damage.

⚠ CAUTION

- Do not use the washer without the inlet filters. Doing so will cause leaks and malfunction.
- If you use the washer in an area with hard water, the inlet filter may clog due to lime buildup and require more frequent cleaning.

1 Turn off the washer, and unplug the power cord.

2 Turn off hot and cold water faucets.

3 Unscrew the hot and cold water hoses from the back of the washer.

4 Remove the filters from the water valves carefully.

- Use pliers to pull out the filters from the water valves.

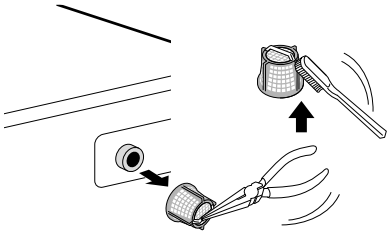

5 Remove foreign objects and soak the filters in white vinegar or a lime scale remover.

- If using a lime scale remover, follow the manufacturer's instructions. Be careful not to damage the filters while cleaning them.

6 Rinse filters thoroughly and press them back into place.

7 Flush then reattach the water hoses.

- Before reattaching the water inlet hoses, flush them by running several gallons of water through them into a bucket or drain, preferably with the faucets wide open for maximum flow.

NOTE

- An IE error message may blink on the display when the water pressure is low or an inlet filter is clogged with dirt. Clean the inlet filter.

Care in Cold Climates

Storing the Washer

If the washer will not be used for an extended period of time and is in an area that could be exposed to freezing temperatures,follow these steps to protect the washer from damage.

NOTE

- Make sure the tub is empty before following these steps.

1. Turn off the washer, and unplug the power cord.
2. Turn off the water faucets.
3. Disconnect hoses from water supply and drain water from hoses.

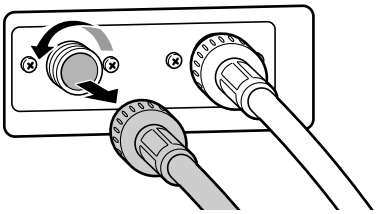

4. Plug the power cord into a properly grounded electrical outlet.
5. Add 1 gallon of nontoxic recreational vehicle (RV) antifreeze to the empty tub and close the lid.
   - Never use automotive antifreeze.
6. Turn on the washer. Press and hold the **Spin** button for 3 seconds to run the **Spin Only** cycle.
7. Press the **Start/Pause** button to start the drain pump for **1 minute**.
   - This will expel some of the antifreeze, leaving enough to protect the washer from damage.
8. Turn off the washer and unplug the power cord.
9. Dry the tub interior with a soft cloth, and close the lid.
10. Store the washer in an upright position.
11. Remove the inserts from the dispenser. Drain any water in the compartments and let them dry.
12. To remove the antifreeze from the washer after storage, run a **Quick Wash** cycle using detergent.
    - Do not add laundry to this cycle.

When the Water Inlet Hoses are Frozen

1. Turn off the washer and unplug the power cord.
2. Turn off the faucets connected to the water inlet hoses.
3. Pour hot water on the frozen faucets to thaw the water inlet hoses and remove the water inlet hoses.
4. Immerse the water inlet hoses in hot water to thaw them.
5. Reconnect the water inlet hoses to the water inlets of the washer and to the faucets.
   - See **Connecting the Water Inlet Hoses** for details.
6. Turn on the faucets.
7. Press the **Power** button to turn on the washer.

8 Press and hold the **Spin** button for 3 seconds to run the **Spin Only** cycle for draining and spinning.

9 Press the **Start/Pause** button and check that the water fills properly.

When the Drain Hose is Frozen

1 Pour hot water in the washer tub and close the lid.

2 Wait for 1 - 2 hours.

3 Press the **Power** button to turn on the washer.

4 Press and hold the **Spin** button for 3 seconds to run the **Spin Only** cycle for draining and spinning.

5 Press the **Start/Pause** button to make sure the water drains.

TROUBLESHOOTING

The washer is equipped with an automatic error-monitoring system to detect and diagnose problems at an early stage. If the washer does not function properly or does not function at all, check the following before you call for service.

For detailed information or videos, visit www.lg.com for the troubleshooting page.

Before Calling for Service

Error Messages

Problem	Possible Cause & Solution
UE **UNBALANCE ERROR**	**The load is too small.** • Add additional items to allow the washer to balance the load.
	Heavy articles are mixed with lighter items. • Always try to wash articles of somewhat similar weight to allow the washer to evenly distribute the weight of the load for spinning.
	The load is out of balance. • Manually redistribute the load if articles have become tangled, preventing the automatic rebalancing from working properly.
IE **INLET ERROR**	**Water supply faucets are not fully open.** • Make sure that the water faucets are fully open.
	Water inlet hoses are kinked, pinched, or crushed. • Make sure that the hoses are not kinked, pinched or crushed behind or under the washer. Be careful when moving the washer during cleaning or maintenance.
	Water inlet filters are clogged. • Clean the inlet filters. See **MAINTENANCE**.
	Water supply pressure to faucet or house is too low. • Check another faucet in the house to make sure that household water pressure is adequate and flow is not restricted. • Disconnect the water inlet hoses from the washer and run a few gallons of water through the hoses to flush out any dirt. • If flow is too low, contact a plumber to have the water supply lines repaired.
	Water supply connected with leak-limiting hoses. • The use of hoses designed to limit leaks is not recommended. Leak-limiting hoses can trip falsely and prevent the washer from filling.
	The end of the drain hose is lower than 29.5 inches (75 cm) above the bottom of the washer. • Move the end of the drain hose so that it is higher than 29.5 inches (75 cm) above the bottom of the washer.
OE **WATER OUTLET ERROR**	**Drain hose is kinked, pinched, or clogged.** • Make sure that the drain hose is free of clogs or kinks and is not pinched behind or under the washer.
	The end of the drain hose is more than 96 inches (2.4 m) above the bottom of the washer. • Move the end of the drain hose so that it is lower than **96 inches (2.4 m)**.

Problem	Possible Cause & Solution
CL **CONTROL LOCK FUNCTION**	**The control lock function is on to prevent anyone from changing cycles or operating the washer.** • Turn off the control lock function in the control panel. See **Control Lock** under **Options and Extra Functions**.
dr **DRAIN FEATURE**	**Special drain feature** • If the washer is paused during a cycle for more than 4 minutes, the cycle will be canceled and any water remaining in the tub will be drained. • This is not an error code. It indicates that the drain function is operating.
dE **LID ERROR**	**Lid is not closed properly.** • Close the lid properly. • If the lid is closed and this error message is still displayed, call for service.
dL **LID LOCK ERROR**	**Lid is not locked properly.** • Make sure that the lid is closed properly and press the **Start/Pause** button. You can hear the locking sound to lock the lid in the beginning of the cycle. The washer will not operate unless the lid is locked. • Make sure that nothing is caught under the lid, including shipping material or clothing. • Make sure that the latch mechanism is fully retracted. • If the lid is closed and this error message is still displayed, call for service.
LE1 **FOREIGN OBJECT ERROR**	**Foreign objects such as coins, pins, clips, etc., are caught between the pulsator and the inner tub.** • Turn the washer off then on again. Press the **Spin** button without selecting a cycle to drain and spin the load. • When the **Spin** cycle is completed, empty the tub and find and remove any objects caught in the pulsator. • Always check pockets, etc., before washing to prevent error codes or damage to the washer or clothing. • For some models, LE is displayed first, then the 1 is displayed.
tcL **TUB CLEAN ALARM**	**It is time to run the Tub Clean cycle.** • This is not an error code. It indicates that the **Tub Clean** cycle is running or needs to be run to clean the washer tub. • For some models, tc is displayed first, then the L is displayed.
ub **UNBALANCE DETECTION**	**The washer has detected an out of balance load.** • This display is for your information only, and no action is required. If the washer detects a load that is too far out of balance to spin, it will display this code while it is attempting to rebalance the load. The washer will add water and try to redistribute the load automatically. • As a result, the cycle will take longer than initially estimated.
tE **TEMPERATURE SENSOR ERROR**	**Control error** • Unplug the washer and wait 60 minutes. Reconnect power and try again. • If the error code is still displayed, call for service.
FE **OVERFLOW ERROR**	**Water level is too high due to a faulty water valve.** • Close the water faucets, unplug the washer, and call for service.
PE **PRESSURE SENSOR ERROR**	**The water level sensor is not working correctly.** • Close the water faucets, unplug the washer, and call for service.

Problem	Possible Cause & Solution
LE **MOTOR LOCKED ERROR**	**A motor error has occurred.** • Allow the washer to stand for 30 minutes and then restart the cycle. • If the error code is still displayed, call for service.
Eb **CLUTCH ERROR**	**Clutch error** • Mechanical failure • Unplug the washer and call for service.
PS **SUPPLY VOLTAGE ERROR**	**Supply voltage is not correct.** • Please call LG service center. You can find your local LG service center phone number on the back cover page.

Noises

Problem	Possible Cause & Solution
Clicking	**Lid lock sounds when the lid locks or unlocks.** • Normal operation
Spraying or hissing	**Water spraying or circulating during the cycle** • Normal operation
Humming or Gurgling	**Drain pump is pumping water from the washer at times during a cycle.** • Normal operation
Water sloshing	**A liquid in the balance ring around the pulsator helps the basket spin smoothly.** • Normal operation
Water being added after the washer has already begun to operate	**The washer adapts to the load size and type to add more water to the cycle as needed.** • Normal operation
	The wash load may be unbalanced. If the washer senses that the load is unbalanced, it will stop and refill to redistribute the load. • Normal operation
	The washer may be diluting laundry additives to add to the wash load. • Normal operation
Rattling and clanking noise	**Foreign objects, such as keys, coins, or safety pins may be in tub or pump.** • Stop the washer, check the tub and the drain filter for foreign objects. • If noise continues after the washer is restarted, call for service.
Thumping sound	**Heavy wash loads may produce a thumping sound.** • This is normal, but if the sound continues, the washer is probably out of balance. Stop and redistribute wash load.
	Wash load may be out of balance. • Pause the cycle and redistribute the load after the lid unlocks.
Vibrating noise	**Packaging materials were not removed.** • See **Unpacking and Removing Shipping Material** in **INSTALLATION**.
	Wash load may be unevenly distributed in the tub. • Pause the cycle and redistribute the load after the lid unlocks.
	Not all leveling feet are resting firmly and evenly on the floor. • See **Leveling the Washer** in **INSTALLATION**.

Problem	Possible Cause & Solution
Vibrating noise	**Floor is not rigid enough.** • Make sure that the floor is solid and does not flex. See **Flooring** in **INSTALLATION**.
Squeaking noise	**Packaging materials were not removed.** • See **Unpacking and Removing shipping Material** in **INSTALLATION**.
Banging noise when the washer is filling with water.(Water hammer)	**Plumbing in the home moves or flexes when the water valves in the washer shut off.** • Water hammer is not caused by a defect in the washer. Install water hammer arrestors (purchased separately at hardware or home improvement store) between the fill hose and the washer for best results.
	Household water supply pressure is very high. • Adjust household water supply regulator to a lower pressure or contact a plumber.

Operation

Problem	Possible Cause & Solution
Water Leaking	**Hoses are not connected correctly.** • Check hoses and connectors for leaks, cracks, and splits. • Check and tighten hose connections.
	House drain pipes are clogged. • The washer pumps out water very rapidly. Check for water backing up out of the drain pipe during drain. If water is seen coming out of the drain, check for proper drain hose installation and check for restrictions in the drain. • Contact a plumber to repair drain pipe.
	Drain hose has come out of the drain connector or is not inserted far enough. • Tie drain hose to inlet hose or standpipe to prevent it from coming out during drain. • For smaller drain pipes, insert the drain hose into the pipe as far as the drain hose flange. For larger drain pipes, insert the drain hose into the pipe 1 - 2 inches past the flange.
	A large item such as a pillow or blanket is above the top of the tub. • Use the **Bedding** cycle for large or bulky items. Use extra care and never wash more than half a load of items that float, such as pillows. • Stop the washer and check the load. Make sure that the load does not crest above the top edge of the tub.
	Oversudsing of detergent • Oversudsing may create leaks, and may be caused by the type and amount of detergent used. HE (High-Efficiency) detergent is the only detergent recommended. The normal amount of detergent to use is 1/4 to 1/2 of the maximum amount recommended by the detergent manufacturer. • Always reduce the amount of detergent if the load is small or lightly soiled, or if the water is very soft. • Never use more than the maximum amount recommended by the detergent manufacturer.
Excessive sudsing	**Too much detergent or incorrect detergent** • HE detergents are formulated specifically for HE (High-Efficiency) washers and contain suds reducing agents. Only use detergent with the HE (High-Efficiency) logo. • For detergent quantities refer to **Detergent Use** in **OPERATION**. If sudsing or detergent residue continues to be an issue, add an extra rinse.

Problem	Possible Cause & Solution
Washer will not turn on.	**Power cord is not properly plugged in.** • Make sure that the plug is plugged securely into a grounded, 3-prong, 120-VAC, 60 Hz outlet.
	House fuse is blown, circuit breaker has tripped, or power outage has occurred. • Reset circuit breaker or replace fuse. Do not increase fuse capacity. If the problem is a circuit overload, have it corrected by a qualified election.
Wash cycle time is longer than usual.	**The washer automatically adjusts the wash time for the amount of laundry, water pressure and other operating conditions.** • This is normal. The washer adjusts cycle time automatically to provide optimal results for the selected cycle. The time remaining shown in the display is only an estimate. Actual time may vary.
Incomplete or no dispensing of detergent	**Detergent compartments clogged from incorrect filling.** • Make sure that detergent and additives are put into the correct dispenser compartments. • For all detergent types, always make sure that the dispenser drawer is fully closed before the start of the cycle.
	Too much detergent used. • Make sure that the suggested amount of detergent is used according to the manufacturer's recommendations. You may also dilute the detergent with water to the maximum fill line on the compartment to avoid clogging. Use only HE (High-Efficiency) detergent. - Always use as little detergent as possible. HE (High-Efficiency) washers need very little detergent to achieve optimum results. Using too much detergent will cause poor wash and rinse performance and may contribute to odors in the washer.
	Insufficient water supply • Make sure that both hot and cold water faucets are turned on all the way.
	Normal residue • It is normal for a small amount of detergent to remain in the dispenser. If this residue builds up, it can interfere with normal dispensing of detergents. Refer to the cleaning instructions.
Washer will not operate.	**Control panel has powered off due to inactivity.** • This is normal. Press the **Power** button to turn on the washer.
	Washer is unplugged. • Make sure that the power cord is plugged securely into an electrical outlet.
	Water supply is turned off. • Turn both hot and cold faucets fully on.
	Controls are not set properly. • Make sure that the cycle was set correctly, close the lid and press the **Start/Pause** button to start the wash cycle.
	Lid is open. • Close the lid and make sure that nothing is caught under the lid preventing it from closing completely.
	Circuit breaker/fuse is tripped/blown. • Check house circuit breakers/fuses. Replace fuses or reset breaker. The washer should be on a dedicated branch circuit.
	Start/Pause button was not pressed after the cycle was set. • Press the **Power** button then reselect the desired cycle and press the **Start/Pause** button. If the **Start/Pause** button is not pressed within a certain time, the washer will be turned off. (The time varies by model, from 4 to 60 minutes.)

Problem	Possible Cause & Solution
Washer will not operate.	**Extremely low water pressure.** • Check another faucet in the house to make sure that household water pressure is adequate.
	Washer is too cold. • If the washer has been exposed to temperatures below freezing for an extended period of time, allow it to warm up before pressing the **Power** button. Otherwise, the display will not come on.
Washer is not filling properly.	**Filter is clogged.** • Make sure that inlet filters on the fill valves are not clogged. Refer to **Cleaning the Water Inlet Filters** in **MAINTENANCE**.
	Inlet hoses may be kinked. • Check that inlet hoses are not kinked or clogged.
	Energy efficiency • This is a High-Efficiency (HE) washer. As a result, the water level settings for this washer may be different than for conventional washer.
	Insufficient water supply • Make sure that both hot and cold water faucets are turned on all the way.
	Washer lid is open. • Close the lid and make sure that nothing is caught under the lid preventing it from closing completely.
	Water level is too low. • The water will not normally cover the clothes. The fill level is optimized for the wash motion to achieve the best wash performance.
	Water temperature is too low. • Check water supply connection or water heater setting. • Run hot water at nearby tap prior to starting cycle, to purge cold water from water lines.
Water in the washer does not drain or drains slowly.	**Drain hose is kinked, pinched, or clogged.** • Make sure that the drain hose is free of clogs or kinks and is not pinched behind or under the washer.
	The end of the drain hose is more than 96 inches (2.4 m) above the bottom of the washer. • Move the end of the drain hose so that it is lower than **96 inches (2.4 m)**.
Bleach does not dispense.	**Bleach dispenser cover is not properly installed (on some models).** • Make sure that the bleach cover is properly installed and snapped into place before the beginning of the cycle.
	Bleach dispenser is dirty or clogged. • Lift out the bleach dispenser cover (if present) and clean out the reservoir. Lint and other foreign debris that are collected inside the dispenser may prevent proper dispensing of the bleach.
Premature dispensing of bleach	**Bleach dispenser filled for future load.** • You cannot store bleach in the dispenser for future use. The bleach will be dispensed every load.
	Overfilling the bleach dispenser • Overfilling the bleach dispenser will cause the bleach to dispense immediately, which will damage the laundry or the washer. Always measure bleach, but never fill above the max line on the dispenser. **A half cup** of bleach is sufficient for most loads. Never use more than **1 cup** of bleach.

Performance

Problem	Possible Cause & Solution
Wrinkling	**Washer is not unloaded promptly.** • Always remove items from the washer as soon as the cycle is complete.
	Washer is overloaded. • The washer can be fully loaded, but the tub should not be tightly packed with items. The lid of the washer should close easily.
	Hot and cold water inlet hoses are reversed. • Hot water rinse can set wrinkles in garments. Check the Inlet hose connectors.
Staining	**Bleach or softener dispensed too soon.** • Dispenser compartment was overfilled, causing the bleach or softener to dispense immediately. Always measure bleach, and never use more than **1 cup**.
	Bleach or softener was added directly to the wash load in the tub. • Always use the dispensers to ensure that laundry products are properly dispensed at the right time in the cycle.
	Washer was not unloaded promptly. • Always remove items from the washer as soon as possible after the cycle is completed.
	Clothes were not properly sorted. • Always wash dark colors separately from light colors and whites to prevent discoloration. • Never wash heavily soiled items with lightly soiled items.
Poor stain removal	**Proper options are not selected.** • Heavier soils and tougher stains may require extra cleaning power. Set the soil level setting to **Heavy** after selecting the cycle.
	Previously set stains. • Articles that have previously been washed may have stains that have been set. These stains may be difficult to remove and may require hand washing or pre-treating to aid in stain removal.
Musty or mildewy odor in the washer	**Incorrect or too much detergent has been used.** • Use only HE (High-Efficiency) detergent in accordance with the manufacturer's instructions.
	Inside of the tub was not cleaned properly. • Run the **Tub Clean** cycle regularly.

Wi-Fi

Problem	Possible Cause & Solution
Your home appliance and smartphone are not connected to the Wi-Fi network.	**The password for the Wi-Fi that you are trying to connect to is incorrect.** • Find the Wi-Fi network connected to your smartphone and remove it, then connect your appliance on **LG ThinQ**.
	Mobile data for your smartphone is turned on. • Turn off the **Mobile data** of your smartphone and connect the appliance using the Wi-Fi network.
	The wireless network name (SSID) is set incorrectly. • The wireless network name (SSID) should be a combination of English letters (A-Z) and numbers (0-9). Do not use special characters.

Problem	Possible Cause & Solution
Your home appliance and smartphone are not connected to the Wi-Fi network.	**The router frequency is not 2.4 GHz.** • Only a 2.4 GHz router frequency is supported. Set the wireless router to 2.4 GHz and connect the appliance to the wireless router. To check the router frequency, check with your Internet service provider or the router manufacturer.
	The appliance is too far from the router. • If the appliance is too far from the router, the signal may be weak and the connection may not be configured correctly. Move the location of the router so that it is closer to the appliance.
	LG ThinQ is asking for a password to connect to the product. • If you are asked to provide a password to connect to the **product** (not to your home network) during the Wi-Fi setup, enter the last 4 characters of the network name, repeated twice, with no spaces. For example, if the network name appears as LG_XXXX_8b92, then you would enter 8b928b92 as your password. The password is case sensitive and the last 4 characters are unique to your appliance.

LIMITED WARRANTY

USA

TERMS AND CONDITIONS

ARBITRATION NOTICE: THIS LIMITED WARRANTY CONTAINS AN ARBITRATION PROVISION THAT REQUIRES YOU AND LG ELECTRONICS (“LG”) TO RESOLVE DISPUTES BY BINDING ARBITRATION INSTEAD OF IN COURT, UNLESS YOU CHOOSE TO OPT OUT. IN ARBITRATION, CLASS ACTIONS AND JURY TRIALS ARE NOT PERMITTED. PLEASE SEE THE SECTION TITLED “PROCEDURE FOR RESOLVING DISPUTES” BELOW.

Should your LG Washer (“Product”) fail due to a defect in materials or workmanship under normal and proper use, during the warranty period set forth below, LG will, at its option, repair or replace the Product. This limited warranty is valid only to the original retail purchaser of the Product (“You”) and applies only when purchased lawfully and used within the United States including U.S. Territories.

WARRANTY PERIOD		
Washer	**Stainless Steel Tub**	**Direct Drive Motor (Stator and Rotor)**
Parts (internal/ functional parts only) and Labor: One (1) year from the date of original retail purchase, or from the date of delivery as per applicable law	Parts Only: Three (3) years from the date of original retail purchase, or from the date of delivery as per applicable law You are responsible for any applicable labor cost.	Parts Only: Ten (10) years from the date of original retail purchase, or from the date of delivery as per applicable law You are responsible for any applicable labor cost.

- Replacement Products and parts are warranted for the remaining portion of the original warranty period or ninety (90) days, whichever is greater.
- Replacement Products and parts may be new, reconditioned, refurbished, or otherwise factory remanufactured.
- Replaced Product or part(s) will be the property of LG.
- Proof of original retail purchase specifying the Product model and date of purchase is required to obtain warranty service under this limited warranty.

EXCEPT TO THE EXTENT PROHIBITED BY APPLICABLE LAW, ANY IMPLIED WARRANTY OF MERCHANTABILITY OR FITNESS FOR A PARTICULAR PURPOSE ON THE PRODUCT IS LIMITED IN DURATION TO THE DURATION OF THE ABOVE LIMITED WARRANTY. UNDER NO CIRCUMSTANCES SHALL LG OR ITS U.S. DISTRIBUTORS/DEALERS BE LIABLE FOR ANY INDIRECT, INCIDENTAL, CONSEQUENTIAL, SPECIAL, OR PUNITIVE DAMAGES, INCLUDING, WITHOUT LIMITATION, LOST GOODWILL, LOST REVENUES OR PROFITS, WORK STOPPAGE, IMPAIRMENT OF OTHER GOODS, COST OF REMOVAL AND REINSTALLATION OF THE PRODUCT, LOSS OF USE, OR ANY OTHER DAMAGES WHETHER BASED IN CONTRACT, TORT, OR OTHERWISE. LG’S TOTAL LIABILITY, IF ANY, SHALL NOT EXCEED THE PURCHASE PRICE PAID BY YOU FOR THE PRODUCT.

SOME STATES DO NOT ALLOW THE EXCLUSION OR LIMITATION OF INCIDENTAL OR CONSEQUENTIAL DAMAGES OR LIMITATIONS ON HOW LONG AN IMPLIED WARRANTY LASTS, SO THE ABOVE EXCLUSIONS OR LIMITATIONS MAY NOT APPLY TO YOU. THIS LIMITED WARRANTY GIVES YOU SPECIFIC LEGAL RIGHTS AND YOU MAY ALSO HAVE OTHER RIGHTS THAT VARY FROM STATE TO STATE.

THIS LIMITED WARRANTY DOES NOT COVER:

- Service trips to deliver, pick up, or install, educate how to operate, correct wiring, or correct unauthorized repairs.
- Damage or failure of the Product to perform during power failures and interrupted or inadequate electrical service.

- Damage or failure of the Product caused by leaky or broken water pipes, frozen water pipes, restricted drain lines, inadequate or interrupted water supply or inadequate supply of air.
- Damage or failure of the Product resulting from operating the Product in a corrosive atmosphere or contrary to the Product owner’s manual.
- Damage or failure of the Product caused by accidents, pests and vermin, lightning, wind, fire, floods, acts of nature, or any other causes beyond the control of LG.
- Damage or failure of the Product caused by unauthorized modification or alteration, or if the Product is used for other than the intended purpose, or any water leakage where the Product was not properly installed.
- Damage or failure of the Product caused by incorrect electrical current, voltage, or plumbing codes.
- Damage or failure of the Product caused by transportation, storage, and/or handling, including scratches, dents, chips, and/or other damage to the finish of the Product, unless such damage is reported within one (1) week of delivery.
- Damage or failure of the Product resulting from misuse, abuse, improper installation, repair, or maintenance. Improper repair includes the use of parts not authorized by LG. Improper installation or maintenance includes installation or maintenance contrary to the Product owner’s manual.
- Damage or failure of the Product caused by the use of parts, components, accessories, consumable cleaning products, or any other products or services that were not authorized by LG.
- Damage or missing items to any display or open box Product.
- Refurbished Product or any Product sold “As Is”, “Where Is”, “With all Faults”, or similar disclaimer.
- Products with original serial numbers that have been removed, altered, or cannot be readily determined.
- Increases in utility costs and additional utility expenses.
- Any noises associated with normal operation.
- Products used for other than normal and proper household use (e.g., commercial, business, or industrial settings, including any retail or food service establishments, or any commercial lodging/transient rental setting), or any use contrary to the Product owner's manual.
- Costs associated with removal and reinstallation of the Product for repairs, or the removal and reinstallation of the Product if it is installed in an inaccessible location or not installed in accordance with the Product Owner's manual.
- Accessories, removable components, or consumable parts (e.g. Shelves, door bins, drawers, water/air filters, racks, light bulbs, batteries, etc., as applicable), except for internal/functional parts covered under this limited warranty.

The cost of repair or replacement under these excluded circumstances shall be borne by You.

TO OBTAIN WARRANTY SERVICE AND ADDITIONAL INFORMATION

Call 1-800-243-0000 and select the appropriate option from the menu.

Or visit our website at **http://www.lg.com**

Or by mail: LG Electronics Customer Service P.O. Box 240007 Huntsville, AL 35813 ATTN: CIC

PROCEDURE FOR RESOLVING DISPUTES:

ALL DISPUTES BETWEEN YOU AND LG ARISING OUT OF OR RELATING IN ANY WAY TO THIS LIMITED WARRANTY OR THE PRODUCT SHALL BE RESOLVED EXCLUSIVELY THROUGH BINDING ARBITRATION, AND NOT IN A COURT OF GENERAL JURISDICTION. BINDING ARBITRATION MEANS THAT YOU AND LG ARE EACH WAIVING THE RIGHT TO A JURY TRIAL AND TO BRING OR PARTICIPATE IN A CLASS ACTION.

Definitions. For the purposes of this section, references to “LG” mean LG Electronics U.S.A., Inc., its parents, subsidiaries and affiliates, and each of their officers, directors, employees, agents, beneficiaries, predecessors in interest, successors, assigns and suppliers; references to “dispute” or “claim” shall include any dispute, claim or controversy of any kind whatsoever (whether based in contract, tort, statute, regulation, ordinance, fraud, misrepresentation or any other legal or equitable theory) arising out of or relating in any way to the sale, condition or performance of the product or this Limited Warranty.

Notice of Dispute. In the event you intend to commence an arbitration proceeding, you must first notify LG in writing at least 30 days in advance of initiating the arbitration by sending a letter to LG at LG Electronics, USA, Inc. Attn: Legal Department- Arbitration 111 Sylvan Avenue, Englewood Cliffs, NJ 07632. You and LG agree to engage in good faith discussions in an attempt to amicably resolve your claim. The notice must provide your name, address, and telephone number; identify the product that is the subject of the claim; and describe the nature of the claim and the relief being sought. If you and LG are unable to resolve the dispute within 30 days, either party may proceed to file a claim for arbitration.

Agreement to Binding Arbitration and Class Action Waiver. Upon failure to resolve the dispute during the 30 day period after sending written notice to LG, you and LG agree to resolve any claims between us only by binding arbitration on an individual basis, unless you opt out as provided below. Any dispute between you and LG shall not be combined or consolidated with a dispute involving any other person's or entity's product or claim. More specifically, without limitation of the foregoing, any dispute between you and LG shall not under any circumstances proceed as part of a class or representative action. Instead of arbitration, either party may bring an individual action in small claims court, but that small claims court action may not be brought on a class or representative basis.

Arbitration Rules and Procedures. To begin arbitration of a claim, either you or LG must make a written demand for arbitration. The arbitration will be administered by the American Arbitration Association ("AAA") and will be conducted before a single arbitrator under the AAA's Consumer Arbitration Rules that are in effect at the time the arbitration is initiated (referred to as the "AAA Rules") and under the procedures set forth in this section. The AAA Rules are available online at www.adr.org/consumer. Send a copy of your written demand for arbitration, as well as a copy of this provision, to the AAA in the manner described in the AAA Rules. You must also send a copy of your written demand to LG at LG Electronics, USA, Inc. Attn: Legal Department- Arbitration 111 Sylvan Avenue, Englewood Cliffs, NJ 07632. If there is a conflict between the AAA Rules and the rules set forth in this section, the rules set forth in this section will govern. This arbitration provision is governed by the Federal Arbitration Act. Judgment may be entered on the arbitrator's award in any court of competent jurisdiction. All issues are for the arbitrator to decide, except that issues relating to the scope and enforceability of the arbitration provision and to the arbitrability of the dispute are for the court to decide. The arbitrator is bound by the terms of this provision.

Governing Law. The law of the state of your residence shall govern this Limited Warranty and any disputes between us except to the extent that such law is preempted by or inconsistent with applicable federal law.

Fees/Costs. You do not need to pay any fee to begin an arbitration. Upon receipt of your written demand for arbitration, LG will promptly pay all arbitration filing fees to the AAA unless you seek more than $25,000 in damages, in which case the payment of these fees will be governed by the AAA Rules. Except as otherwise provided for herein, LG will pay all AAA filing, administration and arbitrator fees for any arbitration initiated in accordance with the AAA Rules and this arbitration provision. If you prevail in the arbitration, LG will pay your attorneys' fees and expenses as long as they are reasonable, by considering factors including, but not limited to, the purchase amount and claim amount. Notwithstanding the foregoing, if applicable law allows for an award of reasonable attorneys' fees and expenses, an arbitrator can award them to the same extent that a court would. If the arbitrator finds either the substance of your claim or the relief sought in the demand is frivolous or brought for an improper purpose (as measured by the standards set forth in Federal Rule of Civil Procedure 11(b)), then the payment of all arbitration fees will be governed by the AAA Rules. In such a situation, you agree to reimburse LG for all monies previously disbursed by it that are otherwise your obligation to pay under the AAA Rules. Except as otherwise provided for, LG waives any rights it may have to seek attorneys' fees and expenses from you if LG prevails in the arbitration.

Hearings and Location. If your claim is for $25,000 or less, you may choose to have the arbitration conducted solely on the basis of (1) documents submitted to the arbitrator, (2) through a telephonic hearing, or (3) by an in-person hearing as established by the AAA Rules. If your claim exceeds $25,000, the right to a hearing will be determined by the AAA Rules. Any in-person arbitration hearings will be held at a location within the federal judicial district in which you reside unless we both agree to another location or we agree to a telephonic arbitration.

Opt Out. You may opt out of this dispute resolution procedure. If you opt out, neither you nor LG can require the other to participate in an arbitration proceeding. To opt out, you must send notice to LG no later than 30 calendar days from the date of the first consumer purchaser's purchase of the product by either: (i) sending an e-mail to optout@lge.com, with the subject line: "Arbitration Opt Out" or (ii) calling 1-

800-980-2973. You must include in the opt out e-mail or provide by telephone: (a) your name and address; (b) the date on which the product was purchased; (c) the product model name or model number; and (d) the serial number (the serial number can be found (i) on the product; or (ii) online by accessing https://www.lg.com/us/support and clicking on “How do I find my model number?”).

You may only opt out of the dispute resolution procedure in the manner described above (that is, by e-mail or telephone); no other form of notice will be effective to opt out of this dispute resolution procedure. Opting out of this dispute resolution procedure will not affect the coverage of the Limited Warranty in any way, and you will continue to enjoy the full benefits of the Limited Warranty. If you keep this product and do not opt out, then you accept all terms and conditions of the arbitration provision described above.

CANADA

TERMS AND CONDITIONS

ARBITRATION NOTICE: THIS LIMITED WARRANTY CONTAINS AN ARBITRATION PROVISION THAT REQUIRES YOU AND LG TO RESOLVE DISPUTES BY BINDING ARBITRATION INSTEAD OF IN COURT, UNLESS THE LAWS OF YOUR PROVINCE OR TERRITORY DO NOT PERMIT THAT, OR, IN OTHER JURISDICTIONS, IF YOU CHOOSE TO OPT OUT. FOR FURTHER CLARITY, THIS ARBITRATION PROVISION IS NOT APPLICABLE TO CONSUMERS RESIDING IN ONTARIO, BRITISH COLUMBIA OR QUÉBEC. IN ARBITRATION, CLASS ACTIONS AND JURY TRIALS ARE NOT PERMITTED. PLEASE SEE THE SECTION TITLED “PROCEDURE FOR RESOLVING DISPUTES” BELOW.

QUEBEC ONLY: LG stands behind its products and makes every reasonable effort to ensure its products can be maintained and repaired, as required. You may access the catalogue of available parts and services at https://www.lg.com/ca_en/support/. HOWEVER, LG IN NO WAY GUARANTEES AND MAKES NO REPRESENTATIONS REGARDING THE AVAILABILITY OF ANY SPECIFIC SPARE OR REPLACEMENT PART, REPAIR SERVICE OR INFORMATION OR INSTRUCTIONS FOR SUCH MAINTENANCE AT ANY TIME. LG EXPRESSLY DISCLAIMS ANY GUARANTEE, WARRANTY OR OBLIGATION IN RESPECT OF THAT AVAILABILITY.

Should your LG Washer ("Product") fail due to a defect in materials or workmanship under normal and proper use, during the warranty period set forth below, LG Electronics Canada, Inc. ("LGECI") will, at its option, repair, replace or pro rate the Product upon receipt of proof of the original retail purchase. This limited warranty is valid only to the original retail purchaser of the Product and applies only to a Product distributed, purchased from an authorized retailer and used within Canada, as determined at the sole discretion of LGECI.

WARRANTY PERIOD (Note: If the original date of purchase cannot be verified, the warranty will begin sixty (60) days from the date of manufacture)		
Washer	**Stainless Steel Tub**	**Direct Drive Motor (Stator or Rotor)**
One (1) year from the date of original retail purchase	Three (3) years from the date of original retail purchase	Ten (10) years from the date of original retail purchase
Parts and Labor (internal/ functional parts only)	Parts only (Consumer will be charged for labor)	Part only (Consumer will be charged for labor)

- Replacement products and parts are warranted for the remaining portion of the original warranty period or ninety (90) days, whichever is greater.
- Replacement products and parts may be new, reconditioned, refurbished, or otherwise factory remanufactured, all at the sole discretion of LGECI.
- Proof of original retail purchase specifying the Product model and date of purchase is required to obtain warranty service under this Limited Warranty.

DISCLAIMER:

IF YOU ARE A CONSUMER SUBJECT TO QUÉBEC, BRITISH COLUMBIA OR ONTARIO’S CONSUMER PROTECTION LEGISLATION, THE EXCLUSION OF WARRANTIES CONTAINED IN THIS SECTION DO NOT EXCLUDE OR LIMIT THE RIGHTS AND REMEDIES THAT YOU MAY HAVE UNDER SUCH ACT, INCLUDING THE RIGHT TO MAKE A CLAIM UNDER ANY OF THE STATUTORY WARRANTIES PROVIDED THEREUNDER.

LGECI’S SOLE LIABILITY IS LIMITED TO THE LIMITED WARRANTY SET OUT ABOVE, UNLESS SUCH LIMITATION IS PROHIBITED BY THE LAWS OF THE PROVINCE IN WHICH YOU RESIDE. EXCEPT AS EXPRESSLY PROVIDED ABOVE, OR IF OTHERWISE PROHIBITED BY THE LAW OF THE PROVINCE IN WHICH YOU RESIDE, LGECI DOES NOT MAKE ANY OTHER WARRANTIES OR CONDITIONS RESPECTING THE PRODUCT, AND HEREBY DISCLAIMS ALL OTHER WARRANTIES AND CONDITIONS RESPECTING THE PRODUCT, WHETHER EXPRESS OR IMPLIED, INCLUDING BUT NOT LIMITED TO, ANY IMPLIED WARRANTY OR CONDITION OF MERCHANTABILITY OR FITNESS FOR A PARTICULAR PURPOSE, AND NO REPRESENTATIONS SHALL BE BINDING ON LGECI. LGECI DOES NOT AUTHORIZE ANY PERSON TO CREATE OR ASSUME FOR IT ANY OTHER WARRANTY OBLIGATION OR LIABILITY IN CONNECTION WITH THE PRODUCT. TO THE EXTENT THAT ANY WARRANTY OR CONDITION IS IMPLIED BY LAW, IT IS

LIMITED TO THE WARRANTY PERIOD SET OUT ABOVE. UNDER NO CIRCUMSTANCES SHALL LGECI, THE MANUFACTURER OR DISTRIBUTOR OF THE PRODUCT, BE LIABLE FOR ANY INCIDENTAL, CONSEQUENTIAL, SPECIAL, DIRECT, INDIRECT, PUNITIVE OR EXEMPLARY DAMAGES, INCLUDING, WITHOUT LIMITATION, LOSS OF GOODWILL, LOST PROFITS, LOSS OF ANTICIPATED PROFITS, LOST REVENUE, LOSS OF USE, OR ANY OTHER DAMAGE, WHETHER ARISING DIRECTLY OR INDIRECTLY FROM ANY CONTRACTUAL BREACH, FUNDAMENTAL BREACH, TORT OR OTHERWISE, OR FROM ANY ACTS OR OMISSIONS. LGECI'S TOTAL LIABILITY, IF ANY, SHALL NOT EXCEED THE PURCHASE PRICE PAID BY YOU FOR THE PRODUCT.

This Limited Warranty gives you specific legal rights. You may also have other rights that vary from province to province depending on applicable provincial laws. Any term of this Limited Warranty that negates or varies any implied condition or warranty under provincial law is severable where it conflicts with such provincial law without affecting the remainder of this warranty's terms.

THIS LIMITED WARRANTY DOES NOT COVER:

- Service trips to i) deliver, pick up, or install or; educate on how to operate the Product; ii) correct wiring or plumbing; or iii) correct unauthorized repairs or installations of the Product;
- Damage or failure of the Product to perform during power failures and interrupted or inadequate electrical service;
- Damage or failure caused by leaky or broken water pipes, frozen water pipes, restricted drain lines, inadequate or interrupted water supply or inadequate supply of air;
- Damage or failure resulting from operating the Product in a corrosive atmosphere or contrary to the instructions outlined in the Product's owner's manual;
- Damage or failure to the Product caused by accidents, pests and vermin, lightning, wind, fire, floods, acts of God, or any other causes beyond the control of LGECI or the manufacturer;
- Damage or failure resulting from misuse, abuse, improper installation, repair, or maintenance of the Product. Improper repair includes use of parts not authorized or specified by LGECI. Improper installation or maintenance includes installation or maintenance contrary to the Product's owner's manual;
- Damage or failure caused by unauthorized modification or alteration of the Product, or if used for other than the intended household purpose/use of the Product, or damage or failure resulting from any water leakage due to improper installation of the Product;
- Damage or failure caused by incorrect electrical current, voltage or plumbing codes;
- Damage or failure caused by use that is other than normal household use, including, without limitation, commercial or industrial use, including use in commercial offices or recreational facilities, or as otherwise outlined in the Product's owner's manual;
- Damage or failure caused by the use of any accessories, components or cleaning products, including, without limitation, that are not approved/authorized by LGECI;
- Damage or failure caused by transportation and handling, including scratches, dents, chips and/or other damage to the finish of the Product, unless such damage results from defects in materials or workmanship and is reported to LGECI within one (1) week of delivery of the Products;
- Damage or missing items to any display, open box, refurbished or discounted Product;
- Refurbished Product or any Product sold "As Is", "Where Is", "With all Faults", or any similar disclaimer;
- Products with original serial numbers that have been removed, altered or cannot be readily determined at the discretion of LGECI;
- Increases in utility costs and additional utility expenses in any way associated with the Product;
- Replacement of light bulbs, filters, fuses or any other consumable parts;
- Costs associated with removal and/or reinstallation of the Product for repairs;
- Noises associated with normal operation and failure to follow instructions found in the use and care and installation guides or operating the unit in an unsuitable environment will not be covered under this warranty.

- Coverage for "in Home" repairs, for products in-warranty, will be provided if the Product is within a 150 km radius from the nearest authorized service center (ASC), as determined by LG Canada. If your Product is located outside a 150 km radius from a ASC, as determined by LG Canada, it will be your responsibility to bring the Product, at your sole expense, to the ASC for in-warranty repair.

All costs and expenses associated with the above excluded circumstances, listed under the heading, This Limited Warranty Does Not Cover, shall be borne by the consumer.

TO OBTAIN WARRANTY SERVICE AND ADDITIONAL INFORMATION, PLEASE CALL OR VISIT OUR WEBSITE:

Call 1-888-542-2623 (8 am - 9 pm EST, 365 days) and select the appropriate option from the menu, or visit our website at http://www.lg.com

PROCEDURE FOR RESOLVING DISPUTES:

EXCEPT WHERE PROHIBITED AT LAW (INCLUDING WITH RESPECT TO QUÉBEC, BRITISH COLUMBIA AND ONTARIO CONSUMERS), ALL DISPUTES BETWEEN YOU AND LG ARISING OUT OF OR RELATING IN ANY WAY TO THIS LIMITED WARRANTY OR THE PRODUCT SHALL BE RESOLVED EXCLUSIVELY THROUGH BINDING ARBITRATION, AND NOT IN A COURT OF GENERAL JURISDICTION. EXCEPT WHERE PROHIBITED AT LAW (INCLUDING WITH RESPECT TO QUÉBEC, BRITISH COLUMBIA AND ONTARIO CONSUMERS), YOU AND LG BOTH IRREVOCABLY AGREE TO WAIVE THE RIGHT TO A JURY TRIAL AND TO BRING OR PARTICIPATE IN A CLASS ACTION.

Definitions. For the purposes of this section, references to “LG” mean LG Electronics Canada, Inc., its parents, subsidiaries and affiliates, and each of their officers, directors, employees, agents, beneficiaries, predecessors in interest, successors, assigns and suppliers; references to “dispute” or “claim” shall include any dispute, claim or controversy of any kind whatsoever (whether based in contract, tort, statute, regulation, ordinance, fraud, misrepresentation or any other legal or equitable theory) arising out of or relating in any way to the sale, condition or performance of the product or this Limited Warranty.

Notice of Dispute. In the event you intend to commence an arbitration proceeding, you must first notify LG in writing at least 30 days in advance of initiating the arbitration by sending a letter to LGECI Legal Team at 20 Norelco Drive, North York, Ontario, Canada M9L 2X6 (the “Notice of Dispute”). You and LG agree to engage in good faith discussions in an attempt to amicably resolve your claim. The notice must provide your name, address, and telephone number; identify the product that is the subject of the claim; and describe the nature of the claim and the relief being sought. If you and LG are unable to resolve the dispute within 30 days of LG’s receipt of the Notice of Dispute, the dispute shall be resolved by binding arbitration in accordance with the procedure set out herein. You and LG both agree that, during the arbitration proceeding, the terms (including any amount) of any settlement offer made by either you or LG will not be disclosed to the arbitrator until the arbitrator determines the dispute.

Agreement to Binding Arbitration and Class Action Waiver. Upon failure to resolve the dispute during the 30 day period after LG’s receipt of the Notice of Dispute, you and LG agree to resolve any claims between you and LG only by binding arbitration on an individual basis, unless you opt out as provided below, or you reside in a jurisdiction that prevents full application of this clause in the circumstances of the claims at issue (in which case if you are a consumer, this clause will only apply if you expressly agree to the arbitration). To the extent permitted by applicable law, any dispute between you and LG shall not be combined or consolidated with a dispute involving any other person’s or entity’s product or claim. More specifically, without limitation of the foregoing, except to the extent such a prohibition is not permitted at law, any dispute between you and LG shall not under any circumstances proceed as part of a class or representative action. Instead of arbitration, either party may bring an individual action in small claims court, but that small claims court action may not be brought on a class or representative basis except to the extent this prohibition is not permitted at law in your province or territory of jurisdiction as it relates to the claims at issue between you and LG. This does not apply to consumers in Ontario, British Columbia and Québec. In accordance with provincial legislation, the consumer and LG may agree to resolve the dispute using any procedure available, including commencing the action before the competent courts of those provinces.

Arbitration Rules and Procedures. To begin arbitration of a claim, either you or LG must make a written demand for arbitration. The arbitration will be private and confidential, and conducted on a simplified and expedited basis before a single arbitrator chosen by the parties under the provincial or territorial commercial arbitration law and rules of the province or territory of your residence. You must also send a copy of your written demand to LG at LG Electronics, Canada, Inc., Attn: Legal Department- Arbitration, 20

Norelco Drive, North York, Ontario M9L 2X6. This arbitration provision is governed by your applicable provincial or territorial commercial arbitration legislation. For consumers in Ontario, British Columbia and Québec, the applicable arbitration legislation only applies if consumers agree to submit the dispute to arbitration. Judgment may be entered on the arbitrator's award in any court of competent jurisdiction. All issues are for the arbitrator to decide, except that, issues relating to the scope and enforceability of the arbitration provision and to the arbitrability of the dispute are for the court to decide. The arbitrator is bound by the terms of this provision.

Governing Law. The law of the province or territory of your purchase shall govern this Limited Warranty and any disputes between you and LG except to the extent that such law is preempted by or inconsistent with applicable federal or provincial/territorial law. Should arbitration not be permitted for any claim, action, dispute or controversy between you and LG, you and LG attorn to the exclusive jurisdiction of the courts of the province or territory of your purchase for the resolution of the claim, action, dispute or controversy between you and LG.

Fees/Costs. You do not need to pay any fee to begin an arbitration. Upon receipt of your written demand for arbitration, LG will promptly pay all arbitration filing fees unless you seek more than $25,000 in damages, in which case the payment of these fees will be governed by the applicable arbitration rules. Except as otherwise provided for herein, LG will pay all filing, administration and arbitrator fees for any arbitration initiated in accordance with the applicable arbitration rules and this arbitration provision. If you prevail in the arbitration, LG will pay your attorneys' fees and expenses as long as they are reasonable, by considering factors including, but not limited to, the purchase amount and claim amount. Notwithstanding the foregoing, if applicable law allows for an award of reasonable attorneys' fees and expenses, an arbitrator can award them to the same extent that a court would. If the arbitrator finds either the substance of your claim or the relief sought in the demand is frivolous or brought for an improper purpose (as measured by the applicable laws), then the payment of all arbitration fees will be governed by the applicable arbitration rules. In such a situation, you agree to reimburse LG for all monies previously disbursed by it that are otherwise your obligation to pay under the applicable arbitration rules. Except as otherwise provided for, LG waives any rights it may have to seek attorneys' fees and expenses from you if LG prevails in the arbitration.

Hearings and Location. If your claim is for $25,000 or less, you may choose to have the arbitration conducted solely (1) on the basis of documents submitted to the arbitrator, (2) through a telephonic hearing, or (3) by an in-person hearing as established by the applicable arbitration rules. If your claim exceeds $25,000, the right to a hearing will be determined by the applicable arbitration rules. Any in-person arbitration hearings will be held at the nearest, most mutually-convenient arbitration location available within the province or territory in which you reside unless you and LG both agree to another location or agree to a telephonic arbitration.

Severability and Waiver. If any portion of this Limited Warranty (including these arbitration procedures) is unenforceable, the remaining provisions will continue in full force and effect to the maximum extent permitted by applicable law. Should LG fail to enforce strict performance of any provision of this Limited Warranty (including these arbitration procedures), it does not mean that LG intends to waive or has waived any provision or part of this Limited Warranty.

Opt Out. The arbitration provision requires you and LG to resolve disputes by binding arbitration instead of court, unless the laws of your province or territory do not permit that, or, in other jurisdictions, if you choose to opt out. The arbitration provision does not apply to consumers in Ontario, British Columbia and Québec.

For individuals that fall within the binding arbitration provisions, you may opt out of this dispute resolution procedure. If you opt out, neither you nor LG can require the other to participate in an arbitration proceeding. To opt out, you must send notice to LG no later than 30 calendar days from the date of the first consumer purchaser's purchase of the product by either (i) sending an e-mail to optout@lge.com, with the subject line: "Arbitration Opt Out;" or (ii) calling 1-800-980-2973. You must include in the opt out e-mail or provide by telephone: (a) your name and address; (b) the date on which the product was purchased; (c) the product model name or model number; and (d) the serial number (the serial number can be found (i) on the product; or (ii) online by accessing https://www.lg.com/ca_en/findmodel_serial/).

In the event that you "Opt Out", the law of the province or territory of your residence shall govern this Limited Warranty and any disputes between you and LG except to the extent that such law is preempted by or inconsistent with applicable federal or provincial/territorial law. Should arbitration not be permitted for any claim, action, dispute or controversy between you and LG, you and LG agree to attorn to the

exclusive jurisdiction of the courts of the province or territory of your residence for the resolution of the claim, action, dispute or controversy between you and LG.

You may only opt out of the dispute resolution procedure in the manner described above (that is, by e-mail or telephone); no other form of notice will be effective to opt out of this dispute resolution procedure. Opting out of this dispute resolution procedure will not affect the coverage of the Limited Warranty in any way, and you will continue to enjoy the full benefits of the Limited Warranty. If you keep this product and do not opt out, then you accept all terms and conditions of the arbitration provision described above.

Conflict of Terms. In the event of a conflict or inconsistency between the terms of this Limited Warranty and the End User License Agreement (“EULA”) in regards to dispute resolution, the terms of this Limited Warranty shall control and govern the rights and obligations of the parties and shall take precedence over the EULA.

LG Customer Information Center	Centro de Información al Cliente LG	Centre de Service à la Clientèle de LG
For inquiries or comments, visit **www.lg.com** or call: 1-800-243-0000 U.S.A. 1-888-542-2623 CANADA	Para consultas o comentarios, visite **www.lg.com** o llame por teléfono: 1-800-243-0000 EE.UU. 1-888-542-2623 CANADÁ	Pour des questions ou des commentaires, visitez **www.lg.com/ca_fr** ou appelez : 1-800-243-0000 ÉTATS-UNIS 1-888-542-2623 CANADA
Register your product Online!	¡Registre su producto en línea!	Enregistrez votre produit en ligne!
www.lg.com	www.lg.com	www.lg.com/ca_fr