LG
Life's Good

MFL71847213220 2REV00

www.lg.com

NANO73* NANO75* NANO77*

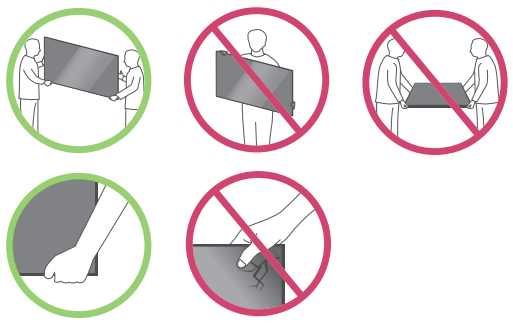

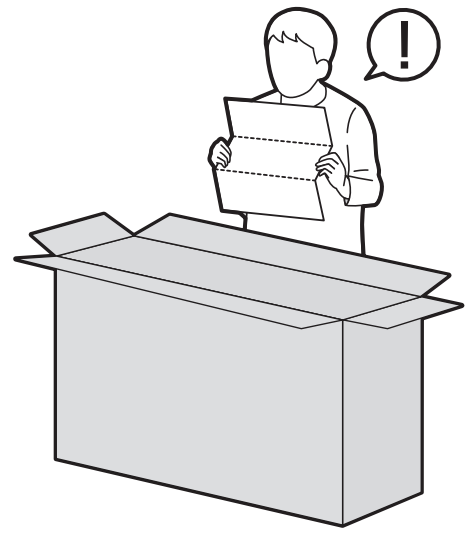

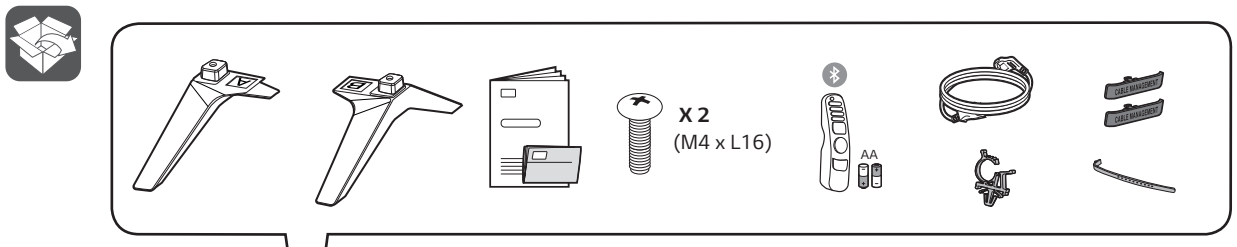

1

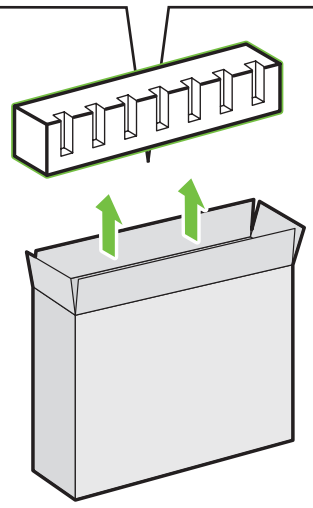

2

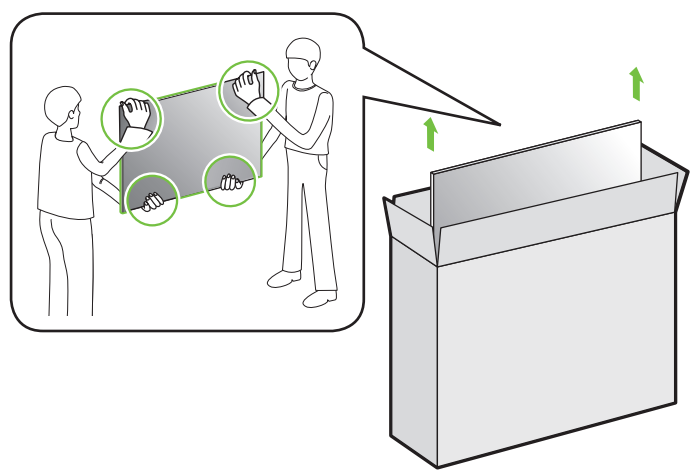

3

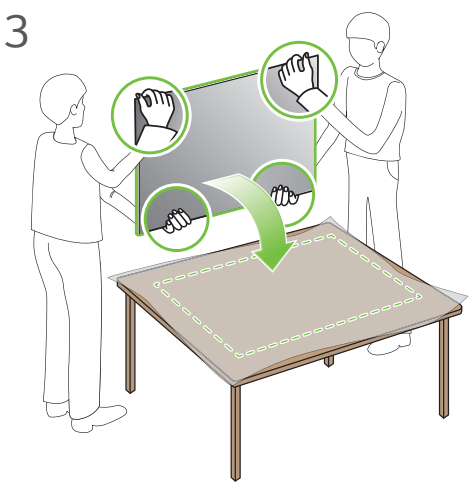

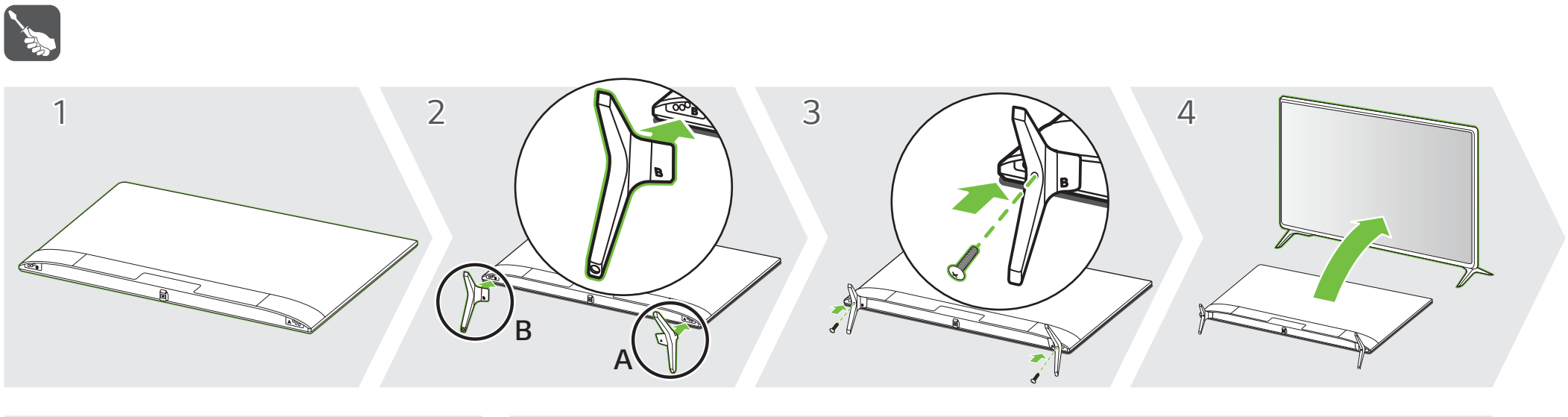

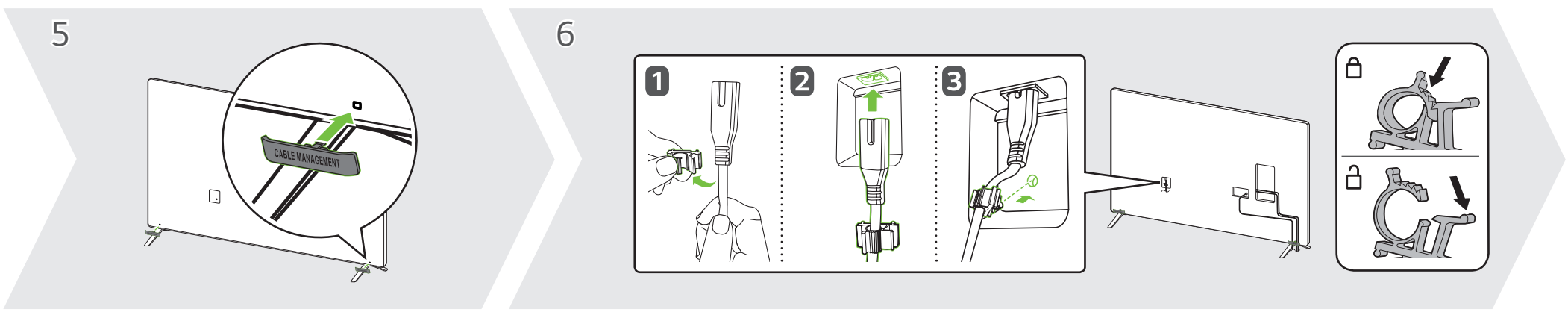

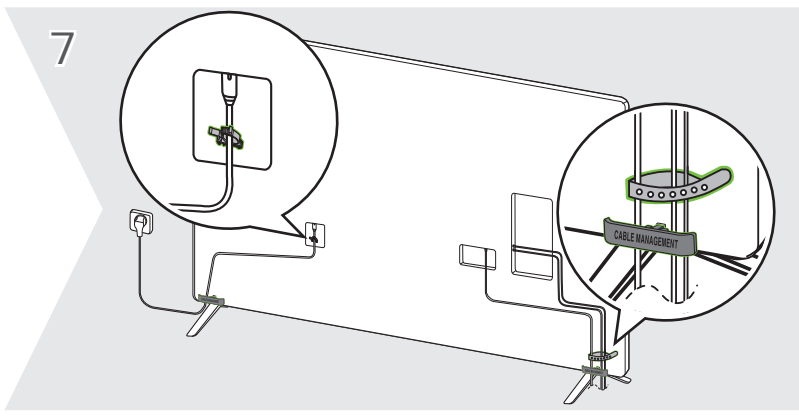

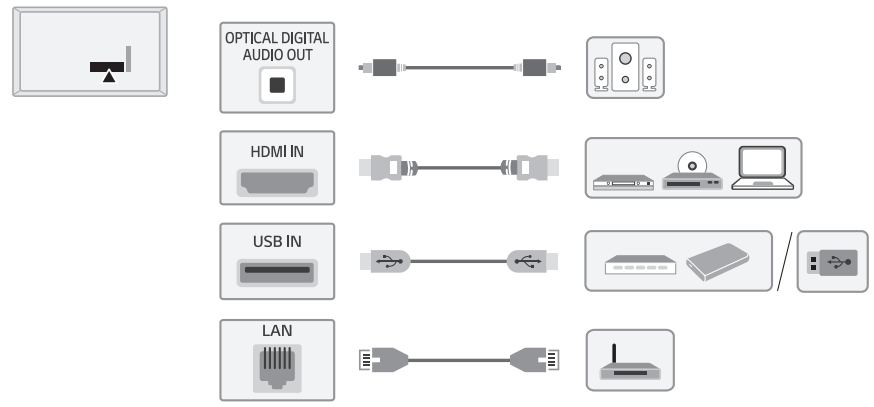

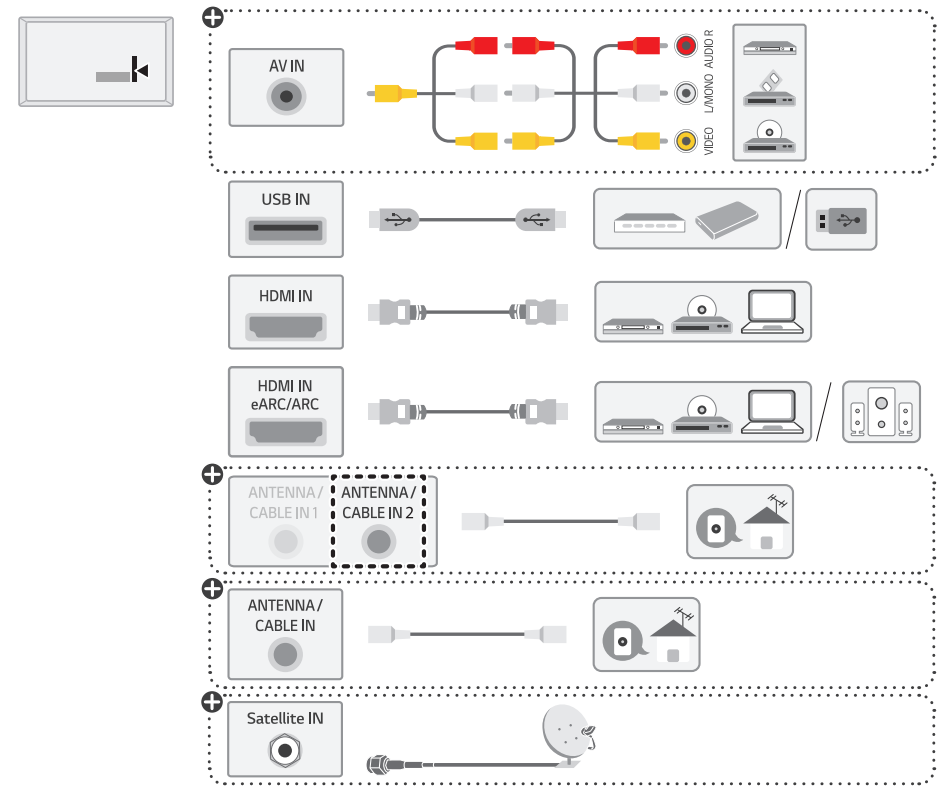

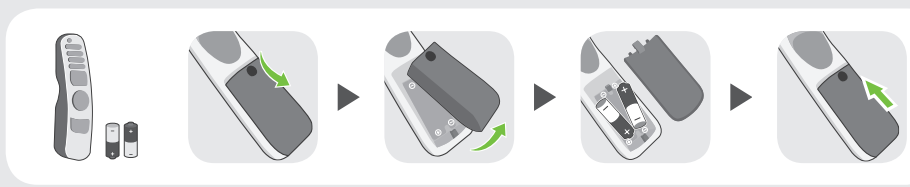

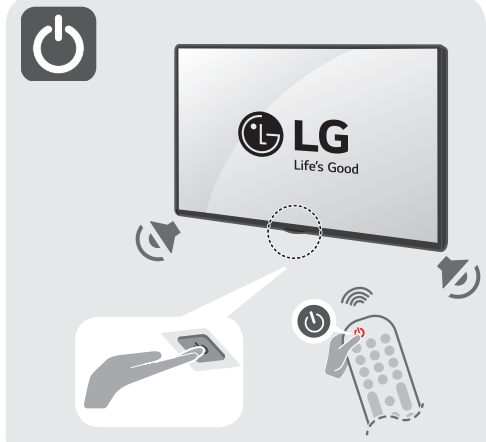

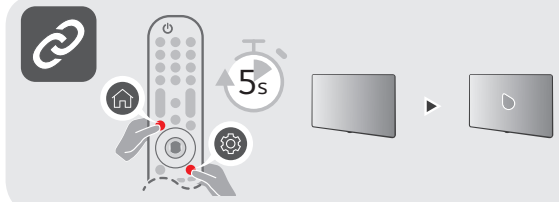

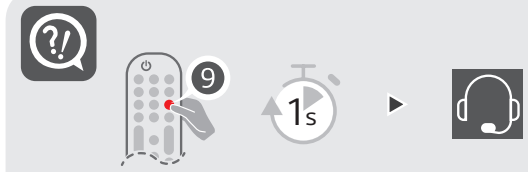

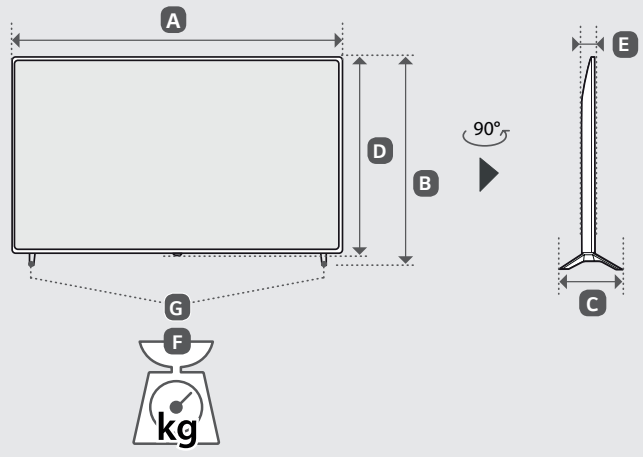

	A	B	C	D	E	F	F - G
	(mm)					(kg)	
43NANO73SQA 43NANO776QA 43NANO75SQA 43NANO756QA	967	622	216	564	57.7	9.3	9.2
Power requirement / Kebutuhan daya	AC 100-240 V~ 50/60 Hz						

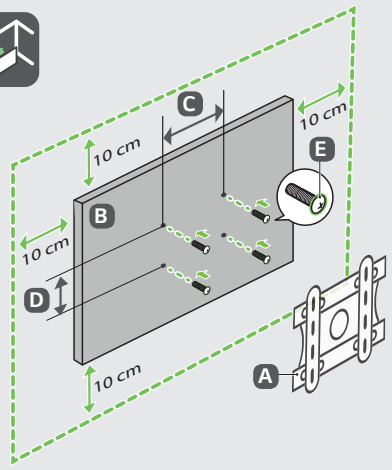

A	B	C x D (mm)	E
LSW240B MSW240	43NANO73* 43NANO75* 43NANO77*	200 x 200	M6

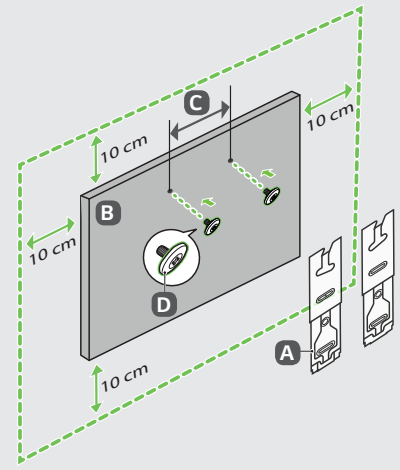

A	B	C (mm)	D
WB21LMB	43NANO73* 43NANO75* 43NANO77*	200	M6

English • Read **Safety and Reference.**

Indonesia • Baca **Keamanan dan Petunjuk**

⊕ : Depending on model / Tergantung pada model

English • The Analog Gender adapter can be purchased separately at Customer Service.

Indonesia • Adaptor Analog Gender dapat dibeli terpisah di Layanan Pelanggan.