LG
Life's Good

OWNER'S MANUAL

# Mini Hi-Fi System

Please read this manual carefully before operating your set and retain it for future reference.

MODEL
CK43N

www.lg.com

2307_Rev01

Copyright © 2023 LG Electronics Inc. All Rights Reserved.

# Safety Information

**CAUTION:** TO REDUCE THE RISK OF ELECTRIC SHOCK DO NOT REMOVE COVER (OR BACK) NO USER-SERVICEABLE PARTS INSIDE REFER SERVICING TO QUALIFIED SERVICE PERSONNEL.

This lightning flash with arrowhead symbol within an equilateral triangle is intended to alert the user to the presence of uninsulated dangerous voltage within the product's enclosure that may be of sufficient magnitude to constitute a risk of electric shock to persons.

The exclamation point within an equilateral triangle is intended to alert the user to the presence of important operating and maintenance (servicing) instructions in the literature accompanying the product.

**WARNING:** TO PREVENT FIRE OR ELECTRIC SHOCK HAZARD, DO NOT EXPOSE THIS PRODUCT TO RAIN OR MOISTURE.

**CAUTION:** The apparatus should not be exposed to water (dripping or splashing) and no objects filled with liquids, such as vases, should be placed on the apparatus.

**WARNING:** Do not install this equipment in a confined space such as a book case or similar unit.

**CAUTION:** Do not use high voltage products around this product. (ex. Electrical swatter) This product may malfunction due to electrical shock.

**CAUTION:** Do not block any ventilation openings. Install in accordance with the manufacturer's instructions.
Slots and openings in the cabinet are provided for ventilation and to ensure reliable operation of the product and to protect it from over heating. The openings shall be never be blocked by placing the product on a bed, sofa, rug or other similar surface. This product shall not be placed in a built-in installation such as a bookcase or rack unless proper ventilation is provided or the manufacturer's instruction has been adhered to.

**NOTICE**: For safety marking information including product identification and supply ratings, please refer to the main label on the bottom or the other surface of the product.

**CAUTION concerning the Power Cord**

The Power Plug is the disconnecting device. In case of an emergency, the Power Plug must remain readily accessible.

Check the specification page of this owner's manual to be certain of the current requirements.

Do not overload wall outlets. Overloaded wall outlets, loose or damaged wall outlets, extension cords, frayed power cords, or damaged or cracked wire insulation are dangerous. Any of these conditions could result in electric shock or fire. Periodically examine the cord of your device, and if its appearance indicates damage or deterioration, unplug it, discontinue use of the device, and have the cord replaced with an exact replacement part by an authorized service center. Protect the power cord from physical or mechanical abuse, such as being twisted, kinked, pinched, closed in a door, or walked upon. Pay particular attention to plugs, wall outlets, and the point where the cord exits the device.

This device is equipped with a portable battery or accumulator.

**How to Safely remove the batteries or the battery pack from the equipment:**

To Remove the old batteries or battery pack, follow the assembly steps in reverse order. To prevent contamination of the environment and bring on possible threat to human and/or animal health, the old batteries or the battery pack must be put in an appropriate container at designated collection points. Do not dispose of batteries or battery pack together with other waste. It is recommended that you use local, free reimbursement systems batteries or battery packs, (may not be available in your area). The batteries or the battery pack should not be exposed to excessive heat such as sunshine, fire or the like.

**CAUTION:** No naked flame sources, such as lighted candles, should be placed on the apparatus.

## Symbols

| | |
|---|---|
| ~ | Refers to alternating current(AC). |
| ⎓ | Refers to direct current(DC). |
| ⧈ | Refers to class II equipment. |
| ⏻ | Refers to stand-by. |
| I | Refers to "ON" (power). |
| ϟ | Refers to dangerous voltage. |

# Table of Contents

## 1 Getting Started

2 Safety Information
4 Table of Contents
6 Unique Features
7 Playable file Requirement
7 – Music file requirement
7 – Compatible USB Devices
7 – USB device requirement
8 Remote control
10 Front panel
12 Rear Panel

## 2 Connecting

14 Connecting to speakers
14 – Attaching the speakers to the unit
15 Optional Equipment Connection
15 – AUX IN Connection
16 – USB Connection
16 – Antenna Connection

## 3 Operating

17 Basic Operations
17 – USB Operations
18 – Selecting a folder and an MP3/WMA file
19 – Deleting a file/folder or format
19 – AUTO DJ
20 Using a BLUETOOTH® wireless technology
20 – Listening to music stored on the Bluetooth devices
23 Using the LG XBOOM App
23 – About "LG XBOOM" App
23 – Install "LG XBOOM" App onto Your Bluetooth Device
24 – Activate Bluetooth with "LG XBOOM" App
25 Radio Operations
25 – Listening to the radio
25 – Improving poor FM reception
25 – Presetting the Radio Stations
25 – Deleting all the saved stations
26 Sound adjustment
26 – Setting the sound mode
27 Advanced Operations
27 – Recording to USB
29 – JUKE BOX Playback
30 Other Operations
30 – Turn off the sound temporarily
30 – DEMO
30 – Resume stop
30 – Sleep Timer Setting
30 – Dimmer
31 – AUTO POWER On
31 – Auto function change
32 Setting the Clock
32 – Setting the Clock through "LG XBOOM" App
32 – Using your player as an alarm clock
33 LG Sound Sync
34 WIRELESS PARTY LINK Connection

## 4 Troubleshooting

35 Troubleshooting
35 – General

## 5 Appendix

37 General specifications
38 Speaker specifications
38 Trademarks and Licenses
39 Maintenance
39 – Handling the Unit

# Unique Features

## BLUETOOTH®

Listens to music stored on your **Bluetooth** device.

## AUTO DJ

Blends the end of one song into the beginning of another for seamless playback.

## USB Direct Recording

Records music to your USB device.

## LG XBOOM

LG XBOOM is an app designed to let you take control of some of LG's latest audio devices. (Page 23)

## LG Sound Sync

Controls volume level of this unit by the remote control of your LG TV that is compatible with LG Sound Sync.

# Playable file Requirement

## Music file requirement

MP3/WMA file compatibility with this unit is limited as follows.

- Sampling frequency : within 32 to 48 kHz (MP3), within 32 to 48 kHz (WMA)
- Bit rate : within 32 to 320 kbps (MP3), 40 to 192 kbps (WMA)
- Maximum files : 2,000
- Maximum folders : 200
- File extensions : ".mp3"/".wma"
- Certain MP3/WMA files may not be played depending on the type or format of the file.

## Compatible USB Devices

- MP3 Player : Flash type MP3 player.
- USB Flash Drive :
  Devices that support USB2.0 or USB1.1.
- The USB function of this unit does not support all USB devices.

## USB device requirement

- Devices which require additional program installation when you have connected it to a computer, are not supported.
- Do not extract the USB device while in operation.
- For a large capacity USB, it may take longer than a few minute to be searched.
- To prevent data loss, back up all data.
- If you use a USB extension cable or USB hub, the USB device is not recognized.
- Using NTFS file system is not supported. (Only FAT(16/32) file system is supported.)
- This unit recognizes up to 2,000 files.
- External HDD, Card readers, Locked devices, or hard type USB devices are not supported.
- USB port of the unit cannot be connected to PC. The unit cannot be used as a storage device.
- Some USB may not work with this unit.

# Remote control

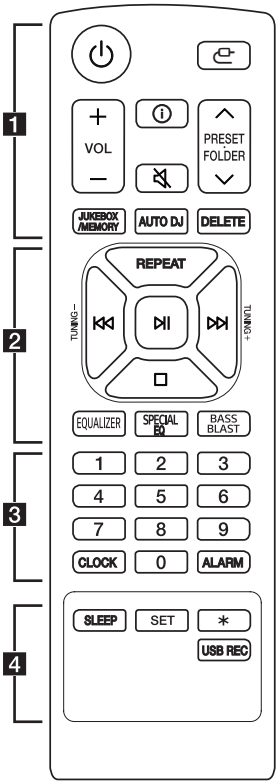


## Replacement of battery

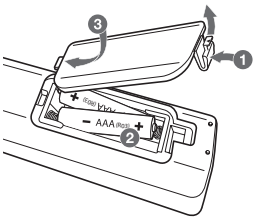


Remove the battery cover on the rear of the remote control, and insert the battery with ⊕ and ⊖ matched correctly.

Risk of fire or explosion if the battery is replaced by an incorrect type.

**1**

⏻ (Standby) : Turns the power on or off.

(Function) : Selects the function and input source.

| Input source / Function | Display |
|---|---|
| USB | USB1 / USB2 |
| AUX input | AUX |
| **Bluetooth** | BT |
| LG Sound Sync (Wireless) | LG TV |
| Radio | FM |

**VOL** (Volume) **+/-** : Adjusts speaker volume.

ⓘ (Information) :
- Sees information about your music. An MP3 file often come with ID3 tag. The tag gives the Title, Artist, Album or Time information.
- Sees **Bluetooth** device name of the unit in BT READY.
- Sees the name of connected all **Bluetooth** device in **Bluetooth** mode.
- When these units are successfully connected each other in WIRELESS PARTY LINK mode, each of connected device names appears in the each unit.

(Mute) : Mutes the sound.

**PRESET·FOLDER ∧/∨** :
- Chooses a preset number for a radio station. (Page 25)
- Searches for a folder of MP3/WMA files. When a USB containing MP3/WMA files in several folders is being played, press **PRESET·FOLDER ∧/∨** to select the folder you want to play.

**JUKEBOX/MEMORY** :
- Stores radio stations. (Page 25)
- Selects JUKE BOX mode. (Page 29)
- Makes JUKE BOX list.

**AUTO DJ** : Selects the AUTO DJ mode. (Page 19)

**DELETE** :
- Deletes MP3/WMA files. (Page 19)
- Deletes a song on the JUKE BOX list.
- Deletes all the saved stations.

**2**

**REPEAT** : Listens to your files repeatedly or randomly.

**TUNING -/+** : Selects the radio stations.

**⏮ / ⏭** (Skip/Search) :
- Skips backward or forward.
- Searches for a section within a file.

**⏯** (Play/Pause) :
- Starts or pauses playback.
- Selects stereo/mono.

**□** (Stop) :
- Stops playback.
- Cancels DELETE function.

**EQUALIZER** : Chooses sound impressions.

**SPECIAL EQ** : Chooses special equalizer.

**BASS BLAST (or BASS BLAST+)** : Press to select BASS (or BASS+) effect directly.

**3**

**0** to **9** numerical buttons : Selects numbered files, or preset number.

**CLOCK** : Sets a clock and checks a time.

**ALARM** : With the ALARM function you can turn on USB play and tuner reception at a desired time.

**4**

**SLEEP** : Sets the system to turn off automatically at a specified time.
(Dimmer : The display window will be darkened by half.)

**SET** : Confirms the setting.

**✱** : The button is not available.

**USB REC** :
- Records to USB.
- To stop Recording, press and hold for 3 seconds.

# Front panel

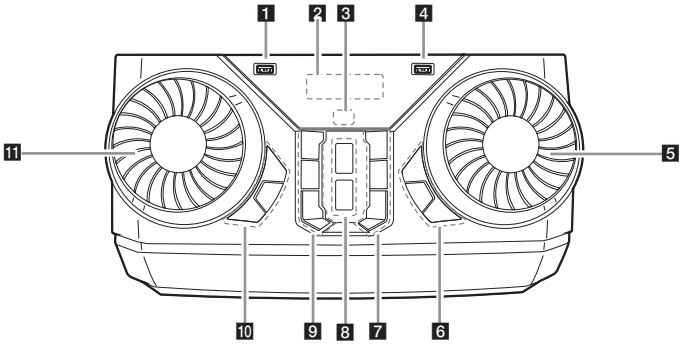


**1** USB 1 Port
You can play sound files by connecting the USB device.

**2** Display window

**3** (Remote sensor)

**4** USB 2 Port
You can play sound files by connecting the USB device.

**5** **MASTER VOL.** (Volume)
Adjust speaker volume.

**6** **BASS BLAST** (or **BASS BLAST+**)
Press to select BASS (or BASS+) effect directly.

**USB REC / DEMO**
- Records to USB.
- To stop Recording, press and hold for 3 seconds.
- In power off status, if you press **USB REC / DEMO**, show DEMO mode.

**WIRELESS LINK**
- Selects MAIN or OTHER on WIRELESS PARTY LINK mode.
- Enable or disable WIRELESS PARTY LINK mode.

**7** (Function)
Selects the function and input source.

| Input source / Function | Display |
|---|---|
| USB | USB1 / USB2 |
| AUX input | AUX |
| **Bluetooth** | BT |
| LG Sound Sync (Wireless) | LG TV |
| Radio | FM |

(Skip/Search)
- Skips forward.
- Searches for a section within a file.
- Selects the radio stations.

(Information)
- Sees information about your music. An MP3 file often come with ID3 tag. The tag gives the Title, Artist, Album or Time information.
- Sees **Bluetooth** device name of the unit in BT READY.
- Sees the name of connected all **Bluetooth** device in **Bluetooth** mode.
- When these units are successfully connected each other in WIRELESS PARTY LINK mode, each of connected device names appears in the each unit.

**8** AUTO DJ
Selects the AUTO DJ mode.

⏯ (Play/Pause)
- Starts or pauses playback.
- Selects stereo/mono.

**9** ⏻ (Standby)
Turns the power on or off.

⏮ (Skip/Search)
- Skips backward.
- Searches for a section within a file.
- Selects the radio stations.

☐ (Stop)
Stops playback or cancels DELETE function.

**10** SPECIAL EQ
Chooses special equalizer.

SEARCH
Moves to folder or file in selection mode.

OK
Selects a folder when searching a file.

**11** EQUALIZER / SEARCH
- Chooses sound impressions.
- Searches a folder or a file.

# Rear Panel

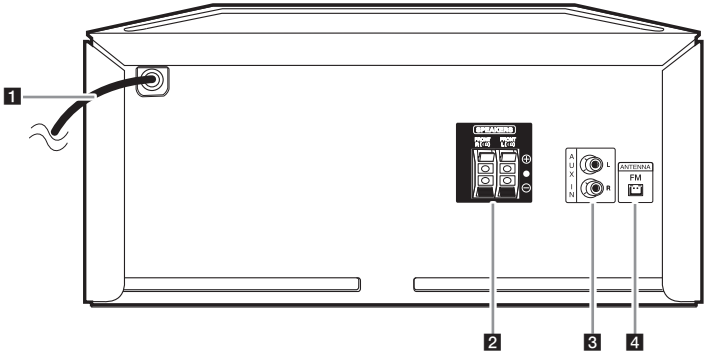


1 Power cord

2 **SPEAKERS** terminals

3 **AUX IN** (L/R)
Connect an auxiliary device.

4 **ANTENNA** (FM)

## Useful functions for using the unit

| Function | Description | To do | Do this |
|---|---|---|---|
| BT Lock On/Off (Page 22) | It allows you to connect a **Bluetooth** device only on BT (**Bluetooth**) and LG TV functions.<br>Initial setting of this function was set to off. | ON | Press and hold ⏯ for 5 seconds in BT (**Bluetooth**) function. |
| | | OFF | Press and hold ⏯ for 5 seconds in BT (**Bluetooth**) function. |
| Auto Power On (Page 31) | It allows the unit to turn on automatically by input signals : BT (**Bluetooth**) or LG TV | ON | Turn off the unit by pressing ⏻ on the unit for 5 seconds. |
| | | OFF | Turn off the unit by pressing ⏻ on the unit for 5 seconds. |

# Connecting to speakers

## Attaching the speakers to the unit

To connect the cable to the unit, press each plastic finger pad to open the connection terminals on the unit. Insert the wire and release the finger pad.

Connect the black of each wire to the terminals marked - (minus) and the other end to the terminals marked + (plus).

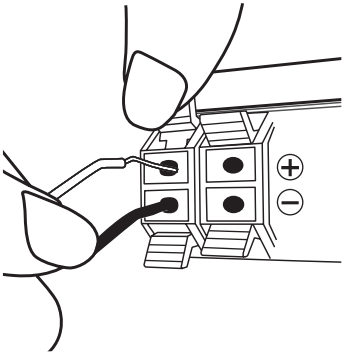

**Caution**

- When you connect the speakers to the unit, make sure to connect the speaker's cable and plug to the corresponding speaker connector.
- Check the volume level before playing music to prevent infirm, child, and pregnant women from being shocked by the sudden and loud sound from the unit.
- Do not use the unit in a limited space.
  It may damage a person's hearing. It is recommended to use it in a wide space.
- Be careful to make sure children do not put their hands or any objects into the *speaker duct.
  * speaker duct : A hole for plentiful bass sound on speaker cabinet (enclosure)
- Use the speaker supplied with this unit only. Using any other speaker may cause malfunction.
- The speakers contain magnet parts, so color irregularity may occur on the TV screen or PC monitor screen. Please use the speakers far away from either TV screen or PC monitor.

# Optional Equipment Connection

## AUX IN Connection

Connect an output of auxiliary device (Camcorder, TV, Player, etc) to the **AUX IN** (L/R) connector.

If your device has only one output for audio (mono), connect it to the left (white) audio jack on the unit.

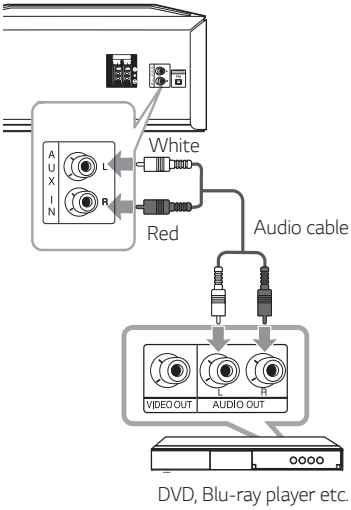


### Listening to music from your external device

The unit can be used to play music from many types of external device.

1. Connect the external device to the **AUX IN** connector of the unit.
2. Turn the power on by pressing ⏻.
3. Press ⏍ to select AUX function.
4. Turn on the external device and start it playing.

## USB Connection

Connect a USB device (or MP3 player, etc.) to the USB ports on the unit.

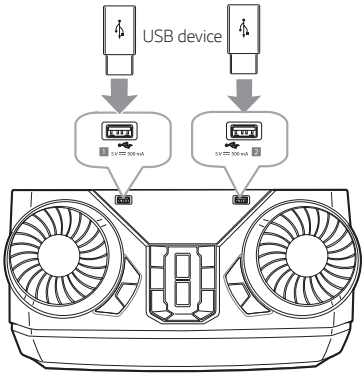


**Note**

Removing the USB Device from the unit :

1. Choose a different function/mode or press ☐ twice in a row.
2. Remove the USB device from the unit.

## Antenna Connection

Connect the supplied FM antenna for listening to the radio.

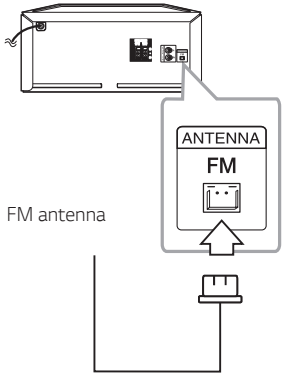


**Note**

Be sure to fully extend the FM wire antenna.

# Basic Operations

## USB Operations

1. Connect the USB device to the USB port.
2. Select USB function by pressing ⏍.

| To | Do this |
|---|---|
| Stop | Press ☐. |
| Playback | Press ▷II. |
| Pause | Press ▷II during playback. |
| Searching for a section within a file | Press and hold ⏮ / ⏭ during playback and release it at the point you want to listen to. |
| Selecting a file directly | Press **0** to **9** numerical buttons on the remote control to go to the desired file directly. |
| Skipping to the next/ previous file | - In stop status,<br>Press ⏮ / ⏭ to go to the next/ previous file.<br>- During playback,<br>(1) By using ⏮ / ⏭ buttons :<br>press ⏭ to go to the next file.<br>Playing in less than 3 seconds, press ⏮ to go to the previous file.<br>Playing after 3 seconds, press ⏮ to go to the beginning of the file.<br>(2) By using **SEARCH** :<br>Rotate **EQUALIZER / SEARCH** or ⏮ / ⏭ and press ▷II to play the file |
| Playing repeatedly or randomly | Press **REPEAT** on the remote control repeatedly. Refer to the note for details about the display change. |

**Note**

- Repeat/Shuffle playback operates as follows.

| On Display | Description |
|---|---|
| OFF | Plays songs in order, and stops the playback. |
| ONE | Plays a same song repeatedly |
| FOLDER | Plays songs in a folder repeatedly. |
| ALL | Plays all the songs repeatedly. |
| SHUFFLE | Plays all the songs once randomly, and stops the playback. |

- When you play JUKE BOX list, only ONE and ALL are available.
- Even after restarting the unit or switching one function to another, you can listen to music from the point where it's last been played.

# Selecting a folder and an MP3/WMA file

## On the unit

1. Press **SEARCH** and rotate **EQUALIZER / SEARCH** or ⏮ / ⏭ until a desired file appears. You can also search a folder if you press **SEARCH** again.
2. Press **OK** or ⏯ to play the selected file. When you search a folder, press **OK** to select a file in the folder, then press **OK** or ⏯ again. The selected file is played.

## On the remote control

1. Press **PRESET·FOLDER** ∧/∨ or ⏮ / ⏭ repeatedly until a desired folder appears.
2. Press ⏯ to play it. The first file of the folder will be played.

### Note

- USB Folders/Files are recognized as below.

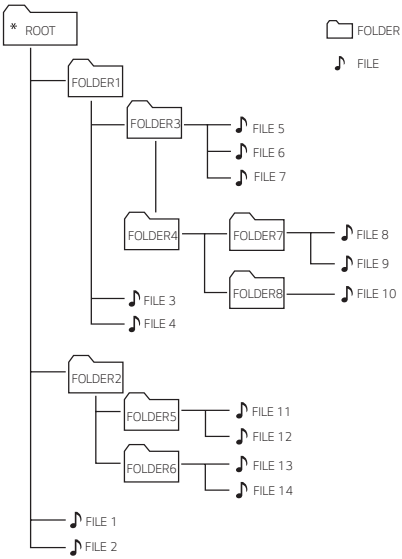


- If there is no file in a folder, the folder will not appear.
- Folders will be presented as the following order,
  ROOT → FOLDER 1 → FOLDER 3 → FOLDER 7 → FOLDER 8 → FOLDER 5 → FOLDER 6
- File will be played from ♪ file No.1 to ♪ file No.14 one by one.
- Files and folders will be presented in order recorded and may be presented differently according to the record circumstances.

*ROOT : The first screen you can see when a computer recognize the USB is "ROOT".

## Deleting a file/folder or format

You can delete file, folder on your USB or format the USB.

1. Select USB function by pressing ⏍.
2. Press **DELETE** on the remote control repeatedly, the display changes as followings.

   DEL FILE → DEL DIR → FORMAT

| On Display | Description |
|---|---|
| DEL FILE | Select the file you want to delete. |
| DEL DIR | Select the folder you want to delete. |
| FORMAT | Select to format the USB device. |

   If you want to exit the current mode, press ☐.

3. To delete file/folder or format, press and hold **DELETE** on the remote control.

**Caution**

- Do not extract the USB device during operation. (play, delete, etc.)
- Regular back up is recommended to prevent data loss.
- The delete function may not be supported according to the USB status. (lock, etc.)

## AUTO DJ

Auto DJ blends the end of one song into the beginning of another for seamless playback. It equalizes volume across files for uninterrupted playback.

Press **AUTO DJ** repeatedly, the display changes as followings.

SHUFFLE → SEQUENTIAL → OFF

| On Display | Description |
|---|---|
| OFF | - |
| SHUFFLE | The music is played randomly on this mode. |
| SEQUENTIAL | The music is played repeatedly on this mode. |

**Note**

- AUTO DJ mode does not support searching for a section within a file or to play repeatedly or randomly.
- If you move to other functions or stop the music using ☐ on AUTO DJ mode, AUTO DJ will be disabled.
- AUTO DJ is not supported in the music file whose length is less than 60 seconds.
- Only SEQUENTIAL is selected when played JUKE BOX list.

# Using a BLUETOOTH® wireless technology

## About Bluetooth

**Bluetooth** is wireless communication technology for short range connection.

The sound may be interrupted when the connection interfered by the other electronic wave or you connect the **Bluetooth** in the other rooms.

Connecting individual devices under **Bluetooth** wireless technology does not incur any charges. A mobile phone with **Bluetooth** wireless technology can be operated via the Cascade if the connection was made via **Bluetooth** wireless technology.

- Available Devices : Smart phone, MP3, Notebook, etc.
- Version : 4.0
- Codec : SBC, AAC

## Bluetooth Profiles

In order to use **Bluetooth** wireless technology, devices must be able to interpret certain profiles. This unit is compatible with following profile.

A2DP (Advanced Audio Distribution Profile)

# Listening to music stored on the Bluetooth devices

## Pairing your unit and Bluetooth device

Before you start the pairing procedure, make sure the **Bluetooth** feature is activated on your **Bluetooth** device. Refer to your **Bluetooth** device's user guide. Once a pairing operation is performed, it does not need to be performed again.

1. Turn on the unit.

**Note**

When Bluetooth connection lock is activated, you can search **Bluetooth** device in BT function.

2. Operate the **Bluetooth** device and perform the pairing operation. When searching for this unit with the **Bluetooth** device, a list of the devices found may appear in the **Bluetooth** device display depending on the type of **Bluetooth** device. Your unit appears as "LG CK43N (XX)".

**Note**

- XX means the last two digits of **Bluetooth** address. For example, if your unit has a **Bluetooth** address such as 9C:02:98:4A:F7:08, you will see "LG CK43N (08)" on your **Bluetooth** device.
- Depending on the **Bluetooth** device type, some devices may have a different pairing process. Enter the PIN code (0000) as needed.
- You can connect this unit with up to 3 **Bluetooth** devices simultaneously using the same method as described above, only in the **Bluetooth** function.
- The multi phone pairing connection is only supported on Android devices. (Multi phone pairing connection may not be supported depending on the connected device specifications.)
- Removable/detachable **Bluetooth** devices (Ex : Dongle etc.) will not support multi phone pairing.

3. When this unit is successfully connected with your **Bluetooth** device, "PAIRED" appears on the display window and change to **Bluetooth** device name soon. Then "BT" will appear on the display window.

**Note**

- "PAIRED" will momentarily appear on the display when you connect other devices for multi phone pairing
- If the device name is unavailable, "_" will be displayed.

4. Listen to music.
   To play a music stored on your **Bluetooth** device, refer to your **Bluetooth** device's user guide.

**Note**

- When using **Bluetooth** technology, you have to make a connection between the unit and the **Bluetooth** device as close as possible and keep the distance.
  However, it may not work well in certain situations as described below:
  - There is a obstacle between the unit and the **Bluetooth** device.
  - There is a device using same frequency with **Bluetooth** technology such as a medical equipment, a microwave or a wireless LAN device.
- You should connect your **Bluetooth** device to this unit again when you restart it.
- Even if this unit connected up to 3 **Bluetooth** devices in the **Bluetooth** mode, you can play and control music by using only one of the connected devices.

**Note**

- The sound may be interrupted when the connection has interference from other electronic devices.
- Depending on the type of the device, you may not be able to use the **Bluetooth** function.
- You can enjoy wireless system using phone, MP3, Notebook, etc.
- The more distance between the unit and the **Bluetooth** device, the lower the sound quality becomes.
- **Bluetooth** connection will be disconnected when the unit is turned off or the **Bluetooth** device gets far from the unit.
- When **Bluetooth** connection is disconnected, connect the **Bluetooth** device to the unit again.
- When a **Bluetooth** device is not connected, "BT READY" appears on the display window.
- When you use **Bluetooth** function, adjust the volume to a proper level on the **Bluetooth** device.
- When you connect **Bluetooth** device (iOS device etc.) to this unit or operate the device, the volume level can be synchronized with each other.
- **Bluetooth** connection will be disconnected when you change the **Bluetooth** function to the others. In "LG XBOOM" app connection, only one device which you are playing keeps **Bluetooth** connection. You can control the **Bluetooth** device with this unit but you cannot use sound output.
- When entering **Bluetooth** function, this unit automatically connect to **Bluetooth** device which is connected the last or playbacked the last.
  (Auto connection may not be supported depending on the connected device specifications.)

## Controls connected Bluetooth device

You can control connected **Bluetooth** device by the unit; play, pause, stop, skip.

**Note**

- Only Android OS and iOS is available to use this function.
- This function may not be supported depending on the **Bluetooth** device, or operated differently.

## Bluetooth connection lock (BT LOCK)

You can limit **Bluetooth** connection to only BT (**Bluetooth**) and LG TV function to prevent unintended **Bluetooth** connection.

To turn on this function, press and hold ▷II for about 5 seconds in BT (**Bluetooth**) function.
"ON-BT LOCK" appears and you can limit **Bluetooth** connection.

To turn off this function, press and hold ▷II for about 5 seconds in BT (**Bluetooth**) function.
"OFF-BT LOCK" appears.

**Note**

- Even if you set up **Bluetooth** connection lock to On, this unit turns on by Auto Power function. Turn off Auto Power function to prevent it.
- When you turn on or off the **Bluetooth** connection lock, search and connect again using **Bluetooth** after deleting the paired list of your **Bluetooth** device.

# Using the LG XBOOM App

**Note**

- Only Android OS is available to use "LG XBOOM" app with this unit.
- It is recommended to use the latest version of app.

## About "LG XBOOM" App

"LG XBOOM" app brings a suite of new features to this unit.

To enjoy more features, you are recommended to download and install free "LG XBOOM" app.

Below introduces you to a few of the many features of "LG XBOOM" app.

**Multi Juke box:** Your entertainment increases three fold when you connect up to 3 **Bluetooth** phones at the same time. Play music from both phones and create a customized playlist from all phones.

## Install "LG XBOOM" App onto Your Bluetooth Device

There are two ways to install "LG XBOOM" App onto Your **Bluetooth** Device.

### Install "LG XBOOM" App through QR code

1. Install "LG XBOOM" app through QR code. Use the scanning software to scan the QR code.

2. Tap an icon for installation.

**Note**

- Make sure that your **Bluetooth** device is connected to the Internet.
- Make sure that your **Bluetooth** device has a scanning software application. If you don't have one, download one from "Google Android Market (Google Play Store)".
- Depending on the area, QR code may not work.

### Install “LG XBOOM” App through “Google Android Market (Google Play Store)”

1. Tap the “Google Android Market (Google Play Store)” icon.
2. In the search bar, type in the “LG XBOOM” and search it.
3. In the search result list, find and tap “LG XBOOM” to start downloading **Bluetooth** app.
4. Tap an icon for installation.
5. Tap an icon for downloading.

**Note**

- Make sure that your **Bluetooth** device is connected to the Internet.
- Make sure that your **Bluetooth** device is equipped with “Google Android Market (Google Play Store)”.

## Activate Bluetooth with “LG XBOOM” App

“LG XBOOM” app helps to connect your **Bluetooth** device to this unit.

1. Tap “LG XBOOM” app icon on the home screen to open “LG XBOOM” app, and go to the main menu.
2. If you want to get more information to operate, tap [Setting] and tap [Help] menu.

**Note**

- “LG XBOOM” app will be available in the software version as follow;
  - Android O/S: Ver 6.0 or higher
  - Minimum supported versions for each OS may change later.
- If you use “LG XBOOM” app for operation, there would be some differences between “LG XBOOM” app and the supplied remote control. Use the supplied remote control as necessary.
- Depending on the **Bluetooth** device, “LG XBOOM” app may not work.
- After connection of “LG XBOOM” app, music may be output from your **Bluetooth** device. In this case, try connecting procedure again.
- If you operate the other applications or change the settings on your **Bluetooth** device while using “LG XBOOM” app, “LG XBOOM” app may operate abnormally.
- When “LG XBOOM” app operates abnormally, check your **Bluetooth** device and the connection of “LG XBOOM” app and then try to connect again.
- Depending on the smart phone's operating system, you have some differences for “LG XBOOM” operation.
- Check **Bluetooth** setting on your **Bluetooth** device if “LG XBOOM” app connection does not work well.

# Radio Operations

Connect the supplied FM antenna for listening to the radio. (Page 16)

## Listening to the radio

1. Press ⌯ until FM appears in the display window. The last received station is tuned in.
2. Auto tuning :
   Press and hold **TUNING -/+** on the remote control or ⏮ / ⏭ on the unit for about two seconds until the frequency indication starts to change, then release. Scanning stops when the unit tunes in a station.

   Or

   Manual tuning :
   Press **TUNING -/+** on the remote control or ⏮ / ⏭ on the unit repeatedly.
3. Adjust the volume by pressing **VOL +/-** on the remote control or by rotating volume knob on the unit repeatedly.

## Improving poor FM reception

Press ⏯. This will change the tuner from stereo to mono and usually improve the reception.

## Presetting the Radio Stations

You can preset 50 stations for FM.
Before tuning, make sure to turn down the volume.

1. Press ⌯ until FM appears in the display window.
2. Select the desired frequency by pressing **TUNING -/+** on the remote control or ⏮ / ⏭ on the unit.
3. Press **JUKEBOX / MEMORY** on the remote control. A preset number will blink in the display window.
4. Press **PRESET·FOLDER ∧ / ∨** on the remote control to select the preset number you want.
5. Press **JUKEBOX / MEMORY** on the remote control. The station is stored.
6. Repeat steps 2 to 5 to store other stations.
7. To listen a preset station, press **PRESET·FOLDER ∧ / ∨** or **0** to **9** numerical buttons on the remote control.

## Deleting all the saved stations

1. Press **DELETE** on the remote control. "DEL ALL" will flash up on the unit display.
2. Press **DELETE** on the remote control to erase all the saved radio stations. "DELETED ALL" will flash up on the unit display.

# Sound adjustment

## Setting the sound mode

This system has a number of pre-set surround sound fields. The displayed items for the Equalizer may be different depending on sound sources and effects.

You can select a desired sound mode by using **EQUALIZER**.

| On Display | Description |
|---|---|
| BASS (BASS BLAST) or BASS+ (BASS BLAST+) | Reinforces the bass and powerful sound. |
| POP<br>CLASSIC<br>ROCK<br>JAZZ | This program lends an enthusiastic atmosphere to the sound, giving you the feeling you are at an actual rock, pop, jazz or classic concert. |
| FOOTBALL | You can enjoy the equalizer FOOTBALL STADIUM. |
| STANDARD | You can enjoy optimized sound. |

You can select a desired sound mode by using **SPECIAL EQ** on the remote control or the unit.

| On Display | Region | Description |
|---|---|---|
| FUNK, REGUETON, SAMBA, MERENGUE, AXE, SALSA, SERTANEJ, FORRO | Latin America | Optimized equalizer for the music genre prefered in each region. |
| ARABIC | Middle East | |
| DANGDUT | Indonesia | |
| AFRO | Africa | |
| INDIA | India | |

**Note**

- On some speakers, sound may not be heard or heard in low sound depending on the sound mode.
- By pressing **BASS BLAST** (or **BASS BLAST+**) on the unit , you can directly select BASS (BASS BLAST) or BASS+ (BASS BLAST+) effect.

# Advanced Operations

## Recording to USB

You can record a various sound source to USB. (USB1, AUX, FM)

1. Connect the USB device to the unit.
2. Press ⏍ to select a function you want to record.
3. Start the recording by pressing **USB REC** on the remote control or **USB REC / DEMO** on the unit.

| Function | Status | Result |
|---|---|---|
| USB | Play/Pause | Recorded until stop |
| | Resume stop (Page 30) | Quick recorded the latest song |
| | Full stop | Quick recorded All songs<br>In case below, scope is limited.<br>- After File search (Page 18), quick recorded an indexed song<br>- Only while the Folder name is displayed on the display window, quick recording All songs on Folder. (Folder Search Mode is released when there is no button input for a few seconds after entering the folder search mode.) (Page 18)<br>- After the JUKE BOX On (Page 29), quick recorded All songs of JUKE BOX. |
| AUX, FM | - | Recorded until stop |

- If you connect both USB1 and USB2, press **USB REC** on the remote control or **USB REC / DEMO** on the unit when USB1 or USB2 which you want to record blinks in the display window.

### To stop recording

To stop recording, press and hold **USB REC** on the remote control or **USB REC / DEMO** on the unit for 3 seconds. Otherwise, the recording continues.

### Pausing recording

During USB playback or pause, or external sound source recording, press **USB REC** on the remote control or **USB REC / DEMO** on the unit to pause recording. Press it again to restart recording.

### To select recording bit rate

1. Press and hold **USB REC** on the remote control or **USB REC / DEMO** on the unit for 3 seconds.
2. Press ⏮/⏭ to select a bit rate.
3. Press **USB REC** on the remote control or **USB REC / DEMO** on the unit to finish the setting.

The making of unauthorized copies of copy-protected material, including computer programs, files, broadcasts and sound recordings, may be an infringement of copyrights and constitute a criminal offense. This equipment should not be used for such purposes.
**Be responsible**
**Respect copyrights**

### Note

- When you stop recording, the file that has been recorded at that time will be stored. (Except when recording MP3/ WMA files that are in stop status.)
- Do not remove the USB device or turn off the unit during USB recording. If does not, an incomplete file may be made and not deleted on PC.
- If USB recording does not work, the message like "NO USB", "ERROR", "USB FULL", "NOT SUPPORT" or "FILE MAX" is displayed on the display window.
- Multi card reader device or external HDD can not be used for USB recording.
- A file is recorded by about 512 Mbyte when you record for a long term.

### Note

- You may not store more than 2,000 files.
- In case of the unsupported MP3/WMA file, the file recording may be stopped.
- When you are recording during playback, the sound now playing is output.
- It'll be stored as follows.

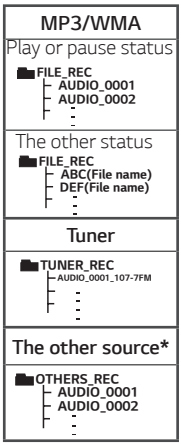


* : AUX and the like.

Tuner : The current recording frequency is shown.

# JUKE BOX Playback

JUKE BOX function enables you to make a playlist of your favorite files from a USB device.
A playlist of up to 100 files can be entered.

## Making JUKE BOX list

1. Press and hold **JUKEBOX / MEMORY** on the remote control to enter the edit mode.
   (Playing will be stopped when you press **JUKEBOX / MEMORY** on the remote control.)
2. Select a file by pressing ⏮ / ⏭ on the remote control.
3. Press and hold **JUKEBOX / MEMORY** on the remote control to save the file.
4. Repeat steps 2 - 3 to store other files.
   (You can modify the list by pressing **PRESET·FOLDER** ∧/∨ on the remote control to select the JUKE BOX program number.)
5. Press **JUKEBOX / MEMORY** on the remote control once again.

To play the JUKE BOX list, press ⏯ on the remote control after you make the list.

**Note**

When making or modifying the JUKE BOX list, REPEAT mode is off.

## Enjoying JUKE BOX

Press **JUKEBOX / MEMORY** on the remote control once. "ON - JUKE BOX" appears on the display window.

To play JUKE BOX list, press ⏯ on the remote control.

To cancel it, press **JUKEBOX / MEMORY** on the remote control once.

"OFF - JUKE BOX" appears on the display window.

## Editing JUKE BOX list

1. Press and hold **JUKEBOX / MEMORY** on the remote control to enter the edit mode.
   (Playing will be stopped when you press **JUKEBOX / MEMORY** on the remote control.)
2. Press **PRESET·FOLDER** ∧ / ∨ on the remote control to select a file to edit.
3. Press ⏮ / ⏭ on the remote control.
4. Press **JUKEBOX / MEMORY** on the remote control.
5. Repeat 2 to 4 to store the other files.
6. Press **JUKEBOX / MEMORY** on the remote control once again.

To play the JUKE BOX list, press ⏯ on the remote control after you edit the list.

## Deleting JUKE BOX list

Deleting function works in the edit mode.

1. Press and hold **JUKEBOX / MEMORY** on the remote control to enter the edit mode.

   Or

   Press **DELETE** on the remote control while JUKE BOX is played to enter the edit mode.
2. Select a song by pressing **PRESET·FOLDER** ∧ / ∨ on the remote control repeatedly.
3. Press **DELETE** on the remote control while a song is selected.

**Note**

- If there is no JUKE BOX list, "NO PROG" appears on the display window when you press **JUKEBOX / MEMORY** on the remote control.
- JUKE BOX is switched off in the case below.
  - Changing to a different function.
  - Turning off and on the unit.
  - Operating the numerical buttons on the remote control.
  - Playing a file by using **SEARCH** and **EQUALIZER / SEARCH** on the unit.
- JUKE BOX list is cleared in the case below.
  - Removing the USB device.
  - Deleting or recording music files in the USB device.

# Other Operations

## Turn off the sound temporarily

Press 🔇 on the remote control to mute your sound.

You can mute your unit, for example, to answer the telephone, the "MUTE" will appear in the display window.

To cancel it, press 🔇 on the remote control again or change the volume level.

## DEMO

In the power off state, press **USB REC / DEMO** on the unit once. The unit will power on and display the each of functions in the display window.

To cancel the DEMO function, press **USB REC / DEMO** on the unit once more.

**Note**

You can enjoy other functions during the DEMO, the DEMO will temporarily pause.
- Without input key in 10 sec, the DEMO will playback automatically.

## Resume stop

The unit records the point where you pressed ☐ depending on the USB. If you press ☐ twice, the unit will clear the stopped point.

## Sleep Timer Setting

Press **SLEEP** on the remote control repeatedly to select delay time between 10 and 180 minutes. After the delay time, the unit will be turned off.

To cancel the sleep function, press **SLEEP** on the remote control repeatedly until "OFF" appears.

**Note**

- You can check the remaining time before the unit is turned off. Press **SLEEP** on the remote control to check or change the remaining time.
- You can edit the remain time when displays the remaining time or "DIMMER".

## Dimmer

Press **SLEEP** on the remote control once. The display window will be darkened by half.

To cancel it, press **SLEEP** on the remote control repeatedly until "OFF" appears.

## AUTO POWER On

This unit automatically turns on by an input source : **Bluetooth** or LG TV

When you turn on your TV connected to this unit, this unit recognizes the input signal and selects the suitable function. You can hear the sound from the unit.

If you try to connect your **Bluetooth** device, this unit turns on and connect your **Bluetooth** device.
You can play your music.

When you turn off this unit by pressing ⏻ on the unit for 5 seconds each time, you can turn on or off the AUTO POWER function.

| On Display | Description |
|---|---|
| ON-AUTO POWER | AUTO POWER function is turned on. |
| OFF-AUTO POWER | AUTO POWER function is turned off. |

**Note**

- Depending on the connected device, this function may not operate.
- Depending on the connected device, the unit turns on but **Bluetooth** function may not be connected.
- If you disconnect **Bluetooth** connection by this unit, some **Bluetooth** devices try to connect to the unit continually. Therefore it is recommended to disconnect the connection before turning off the unit.
- If you try to connect to the "LG XBOOM" app, **Bluetooth** function of this unit is turned on.
- If you turn on the unit using LG TV or **Bluetooth** function, proper function of this unit is turned on.
- If you have already paired with this unit, automatically this unit can turn on by an input source when this unit is turned off.

## Auto function change

This unit recognizes input signals such as **Bluetooth** and LG TV and then changes suitable function automatically.

### When you try to connect Bluetooth device

When you try to connect your **Bluetooth** device to this unit, **Bluetooth** function is selected. Play your music on the **Bluetooth** device.

### When LG TV is connected

When you turn on your LG TV connected by LG Sound Sync, this unit changes the function to LG TV. You can hear the sound from your TV.

**Note**

- This function is not available during recording or deleting.
- This function only works with devices that were previously connected.
- If the **Bluetooth** connection lock function is set, **Bluetooth** and LG TV connection will be only available on **Bluetooth** and LG TV function.

# Setting the Clock

1. Turn the unit on.
2. Press and hold **CLOCK** on the remote control.
3. Select time mode by pressing ⏮ / ⏭ on the remote control.
   - AM 12:00 (for an AM and PM display) or 0:00 (for a 24 hour display)
4. Press **SET** on the remote control to confirm your selection.
5. Select the hours by pressing ⏮ / ⏭ on the remote control.
6. Press **SET** on the remote control.
7. Select the minutes by pressing ⏮ / ⏭ on the remote control.
8. Press **SET** on the remote control.

## Setting the Clock through "LG XBOOM" App

Install "LG XBOOM" app on your Android device. (Page 23-24)

Your unit's clock will be automatically synchronized with your device by activating **Bluetooth** connection through "LG XBOOM" app.

## Using your player as an alarm clock

1. Turn the unit on.
2. Press and hold **ALARM** on the remote control.
3. Press ⏮ / ⏭ on the remote control to change the hours and minutes and press **SET** on the remote control to save.
4. Press ⏮ / ⏭ on the remote control to select function and press **SET** on the remote control to save.
   - Press ⏮ / ⏭ on the remote control to select a preset number when you select Tuner and then, press **SET** on the remote control.
     If there is no preset number, this step is skipped.
5. Press ⏮ / ⏭ on the remote control to change the volume and press **SET** on the remote control to save.

**Note**

- If you set the clock time, you can check the time by pressing **CLOCK** on the remote control even when the player is turned off.
- You can set alarm after you set the clock time.
- If you set the clock time and alarm, you can check the alarm setting information by pressing **ALARM** on the remote control even when the unit is turned off.
- You can select ALARM ON/OFF mode by pressing **ALARM** on the remote control.

# LG Sound Sync

Sound Sync
Wireless

You can control some functions of this unit by your TV's remote control with LG Sound Sync. It is compatible with LG TV that supports LG Sound Sync. Make sure your TV has the LG Sound Sync logo.

Controllable function by LG TV's remote control : Volume up/down, mute

Refer to the TV's instruction manual for the details of LG Sound Sync.

1. Turn on the unit by pressing ⏻.
2. Press ⇦ until LG TV function is selected.
3. Set up the sound output of TV to listen to the sound through this unit :
   TV setting menu [Sound] → [TV Sound output] → [LG Sound Sync (Wireless)]

   "PAIRED" appears on the display window for about 3 seconds and then you can see "LG TV" on the display window if the TV and this unit are connected normally.

**Note**

- You can also use the remote control of this unit while using LG Sound Sync. If you use TV's remote control again, the unit synchronizes with the TV. (According to TV Specifications, the volume and mute of this unit synchronize with TV.)
- If the connection fails, check the conditions of this unit and your TV : power, function.
- Make sure of the condition of this unit and the connection in the cases below when using LG Sound Sync.
  - The unit is turned off.
  - Changing to a different function.
  - Disconnecting the wireless connection caused by interference or a distance.
- The amount of time to turn off this unit is different depending on your TV.
- If you try to change the function on using the LG TV function, volume will be changed according to the LG TV volume level.
- Details of TV setting menu vary depending on the manufacturers or models of your TV.
- If you turned off the unit directly by pressing ⏻, LG Sound Sync will be disconnected. To use this function again, you should reconnect the TV and the unit.
- The volume may be increased when the TV and this unit is connected by LG Sound Sync. Decrease the TV volume and then connect with this unit.
- When you turn on your LG TV connected by LG Sound Sync or enter LG TV function, this unit changes the function to LG TV automatically.
- You should set the TV Sound output manually depending on the TV version.
- If you control TV volume when this unit and TV are connected by LG Sound Sync, this unit may louder the volume due to synchronizing volume with TV's.

# WIRELESS PARTY LINK Connection

The output sound of Ⓐ (MAIN) unit is expanded to Ⓑ (OTHER) unit.
It is compatible with unit that supports WIRELESS PARTY LINK.
The name of function about sound expansion between the compatible products wirelessly was changed to WIRELESS PARTY LINK.

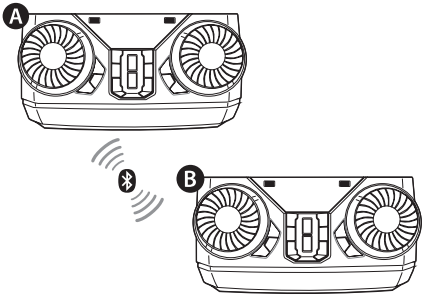


1. Press **WIRELESS LINK** on the unit.
   PARTY LINK MODE SELECT appears in the display window.
2. Press **WIRELESS LINK** on the unit to select MAIN or OTHER.
   - Ⓐ unit : Selects MAIN.
   - Ⓑ unit : Selects OTHER.

   Two units try to connect with each other.
3. When these units are successfully connected each other, each of connected device names appears in the each unit.

## Note

- If you are using the LG Sound Sync, this function is not available. If you connect the LG TV function, "NOT SUPPORT" appears in the display window.
- When WIRELESS PARTY LINK is disconnected, OTHER unit is changed to BT (**Bluetooth**) function.
- If the connection is failed, "FAILED" appears in the display window.
- Mute function is synchronized with each other.
- WIRELESS PARTY LINK connection will be disconnected when you turn off the unit or press **WIRELESS LINK** on the unit.
- Sound of MAIN unit and OTHER unit may be different depending on playback status or source.
- Check the following information when connecting to **Bluetooth**.
  - You can connect only one **Bluetooth** device in the MAIN unit. You cannot connect **Bluetooth** device to the OTHER unit.
  - WIRELESS PARTY LINK connection is only supported on Android devices. (WIRELESS PARTY LINK connection may not be supported depending on the connected device specifications or OS.)
  - Removable/detachable **Bluetooth** devices (ex. Dongle etc.) will not support WIRELESS PARTY LINK connection.
  - When WIRELESS PARTY LINK is connected, **Bluetooth** connection is not available in status of recording or deleting.
  - If you connect WIRELESS PARTY LINK while you are playing connected **Bluetooth** device, it may be reconnected again, depending on phone specification.

# Troubleshooting

## General

| Problem | Cause & Correction |
|---|---|
| The unit does not work properly. | • Turn off the power of this unit and the connected external device (TV, Woofer, DVD-player, Amplifier, etc.) and turn them on again.<br>• Disconnect the power cord of this unit and the connected external device (TV, Woofer, DVD-player, Amplifier, etc.) and then try connecting again.<br>• Previous setting may not be saved when device power is shut off. |
| No Power. | • The power cord is not plugged in. Plug in the power cord.<br>• Check whether electricity failed.<br>Check the condition by operating other electronic devices. |
| No sound. | • Check whether you select right function.<br>Press function button and check the selected function.<br>• Check to see if the Speakers are connected correctly. Speaker cables connected correctly. |
| Radio stations cannot be tuned in properly. | • The antenna is positioned or connected poorly.<br>Connect the antenna securely.<br>• The signal strength of the radio station is too weak.<br>Tune to the station manually.<br>• No stations have been preset or preset stations have been cleared (when being tuned by scanning preset channels).<br>Preset some radio stations, see page 25 for details. |

| Problem | Cause & Correction |
|---|---|
| The remote control does not work properly. | • The remote control is too far from the unit.<br>Operate the remote control within about 7 m (23 feet).<br>• There is an obstacle in the path of the remote control and the unit.<br>Remove the obstacle.<br>• The batteries in the remote control are exhausted.<br>Replace the batteries with new ones. |
| LG Sound Sync does not work. | • Check whether your LG TV supports LG Sound Sync.<br>• Check connection of LG Sound Sync.<br>• Check sound setting of your TV and this unit. |

# General specifications

| General | |
|---|---|
| Power requirements | Refer to the main label on the unit. |
| Power consumption | Refer to the main label on the unit. |
| Dimensions (W x H x D) | Approx. 300 mm x163 mm x 241 mm |
| Operating temperature | 5 °C to 35 °C |
| Operating humidity | 60 % |

| Inputs | |
|---|---|
| Analog audio in (AUX IN) | 1.0 Vrms (1 kHz, -6 dB), 75 Ω, RCA jack (L, R) |

| Tuner | |
|---|---|
| FM Tuning Range | 87.5 to 108.0 MHz or 87.50 to 108.00 MHz |

| System | |
|---|---|
| Frequency Response | 100 to 20,000 Hz |
| Signal-to-noise ratio | More than 75 dB |
| Dynamic range | More than 75 dB |
| Bus Power Supply (USB) | 5 V ⎓ 500 mA |

| Amplifier (RMS Output power) | |
|---|---|
| Total output | 300 W RMS |
| Front | 150 W RMS X 2 (4 Ω at 1 kHz, 30 % THD) |

- Design and specifications are subject to change without notice.

# Speaker specifications

| Front speaker | |
|---|---|
| Type | 2 Way 2 Speaker |
| Impedance | 4 Ω |
| Rated Input Power | 150 W RMS |
| Max. Input power | 300 W RMS |
| Dimensions (W x H x D) | Approx. 201 mm x 306 mm x 216 mm |

- Design and specifications are subject to change without notice.

# Trademarks and Licenses

The **Bluetooth®** word mark and logos are owned by the **Bluetooth®** SIG, Inc. and any use of such marks by LG Electronics is under license.

Other trademarks and trade names are those of their respective owners.

# Maintenance

## Handling the Unit

### When shipping the unit

Please save the original shipping carton and packing materials. If you need to ship the unit, for maximum protection, re-pack the unit as it was originally packed at the factory.

### Keeping the exterior surfaces clean

Do not use volatile liquids such as insecticide spray near the unit. Wiping with strong pressure may damage the surface. Do not leave rubber or plastic products in contact with the unit for a long period of time.

### Cleaning the unit

To clean the player, use a soft, dry cloth. If the surfaces are extremely dirty, use a soft cloth lightly moistened with a mild detergent solution. Do not use strong solvents such as alcohol, benzine, or thinner, as these might damage the surface of the unit.

LG

Life's Good