OWNER'S MANUAL

LG LED Signage

(SYSTEM CONTROLLER)

Please read this manual carefully before operating your set and retain it for future reference.

CSAD

www.lg.com

Copyright © 2023 LG Electronics Inc. All Rights Reserved.

TABLE OF CONTENTS

SAFETY PRECAUTIONS 3

- Precautions for the AC Adapter and Power. 4
- Precautions for Moving the Product 6
- Precautions for Installing the Product..... 7
- Precautions for Cleaning the Product 9
- Precautions for Using the Product..... 10
- Precautions for Using the Remote control 12
- Product Disposal 13

ASSEMBLING AND PREPARING 14

- How to Connect a Cable to the IR-APL Ports 15
- Precautions for Using the IR-APL Port 16
- Optional Accessories..... 17
- Parts and Buttons 18
- Rack Installation (Optional)..... 20
- Connecting LAN 21
- IR Receiver 22

REMOTE CONTROL 23

MAKING CONNECTIONS..... 25

- Connecting to PC..... 25
- Connecting to External Devices..... 26
- Using the Input List..... 26
- Connecting Multiple Monitors..... 27

CONNECT A USB DEVICE 28

TROUBLESHOOTING..... 30

PRODUCT SPECIFICATIONS... 32

LICENSES..... 36

SAFETY PRECAUTIONS

The safety precautions are intended to prevent unexpected danger or harm by helping the user to use the product safely and for its intended purpose.

WARNING

If you ignore the warning message, you may be seriously injured or there is a possibility of accident or death.

CAUTION

If you ignore the caution message, you may be slightly injured or the product may be damaged.

WARNING

Indoor Use Only.

Precautions for the AC Adapter and Power

WARNING

- Use only the power cord or AC adapter provided or approved by LG Electronics, Inc. If you use another power cord, make sure that it is certified by the national standards. If the power cable is faulty in any way, please contact the manufacturer or the nearest authorised service center for a replacement.
- Operate the display only from a power source(i.e. voltage) indicated in the product specification.
  - Otherwise the product can be damaged, fire can occur or you may be electrocuted. If you are not sure what type of power supply you have, consult a certified installation company.
- Make sure the power cord connect to a properly grounded outlet.
  - If you do not you may be electrocuted or injured or the product can be damaged.
- Insert the power plug or AC adapter firmly so it cannot come loose.
  - Poor connection may cause a fire or electric shock.
- In the presence of thunder and lightning, never touch the power cord and signal cable because it can be very dangerous.
  - It can cause electric shock.
- Be careful not to step or place heavy objects (electronic appliances, clothing, etc.) on the power cord or AC adapter. Additionally, do not bend or pull out the power cord or AC adapter with excessive force.
  - Damaged power cords may cause a fire or electric shock.
- Do not connect power cord or AC adapter damaged with sharp objects to power outlet.
  - You may be electrocuted.
- Do not insert a conductor (like a metal chopstick) into one end of the power cord while the other end is connected to the input terminal on the wall. Additionally, do not touch the power cord right after it is unplugged.
  - You may be electrocuted.
- Do not use with a multi-outlet connected by many electrical product and heating devices. Use an exclusive multi-outlet with a grounding terminal.
  - A fire can break out due to overheating.

- If water or any foreign substance goes inside the product, disconnect the power cord immediately and contact the service center.
  - Otherwise, this may cause a fire or electric shock due to damage to the product.
- Keep the power cord or AC adapter away from any heating devices.
  - The cord coating may melt and cause fire or electric shock.
- Never disassemble, repair or modify the power cord or AC adapter.
  - This may cause a fire or electric shock.
- The main cutoff device is the power cord. Please make sure the product is installed near the wall outlet and that it is easily accessible.
- As long as this unit is connected to the AC wall outlet, it is not disconnected from the AC power source even if the unit is turned off.
- Power consumption will be '0' only when the power plug is unplugged.
- Use the appliance coupler as the disconnect device.

⚠ CAUTION

- If the outlet pins of the power plug or AC adapter is covered with dust, be sure to wipe them and keep them clean.
  - Overheating due to layers of dust may cause a fire or electric shock.
- If the outlet pins of the power plug or AC adapter is covered with water be sure to wipe them and keep them clean. Additionally, do not touch the power plug or AC adapter with wet hands.
  - This may cause an electric shock.
- Do not turn the product on or off by plugging in or unplugging the power plug from the power outlet. Do not use the power socket as a switch.
  - This may cause an electric shock or product malfunction.
- Do not unplug the power cord while the product is in use.
  - Electrical shock can damage the product.

Precautions for Moving the Product

WARNING

- Contact the service center before moving the product.
  - It may cause electric shock and damage the product.
- Make sure the product is turned off, unplugged, and all cables have been removed before the product is moved.
  - You may be electrocuted or the product can be damaged.
- When moving the product, do not shock or cause an impact on the front panel.
  - You may be electrocuted or the product can be damaged.
- Use the correct number of people according to the weight of the product. (Under 25 Kg per person use lifting equipment when exceeding 100 Kg)
  - If use the damaged product again, contact the service center because it can cause electric shock or fire.
- Do not hold it upside down while holding only the stand. (It is for stand supported models only.)
  - This may cause stand warping, panel damage and other types of product damage.

CAUTION

- Do not dispose of the product-packing box. Use it when moving by putting the product in the box to carry it.

Precautions for Installing the Product

WARNING

- Contact the service center before installing the product.
  - It can cause electric shock and damage the product.
- Do not drop an object on or impact on the product. Keep out of reach of children and do not place toys or objects near the product to prevent throwing things on the product screen.
  - It can cause injury to human, problem to product and damage the display.
- Do not put heavy objects on, or hang from, the product.
  - If the product collapses or is dropped, you may be injured.
- Do not touch the surface of the product if it overheats.
  - It can cause injury to human.
- Install the product firmly fixed on a floor, wall, etc. to prepare against external impact such as wind and earthquake.
  - You must refer to the manual provided.
- Prevent Children from climbing or hanging on the product.
  - If the product collapses or is dropped, you may be injured.
- Do not install it where there are heating devices such as electrical heaters or lighting equipment.
  - Fire, electrical shock, malfunction may occur.
- Do not install this product by yourself as you may injure yourself or cause damage to the product. Please contact service engineer authorised by service center.
- Do not install this product on a wall if it could be exposed to oil or oil mist.
  - This may damage the product and cause it to fall.
- Do not leave the power or signal cable, etc. on the pathway.
  - This could cause a trip or fall, which could cause an electrical shock, fire, product breakdown, or injury.
- Do not let the product drop when connecting it to an external device connected with a short cable.
  - This may cause injury and damage to the product.
- If you drop the product or the case is broken, turn off the product and unplug the power cord and contact the service center.
  - If you continue to use without taking proper measures, electrical shock or fire can occur.
- Install the product in a dry place where it is not near dust and water. Avoid high temperatures and humidity.
  - This may cause electrical shock, fire or product damage.
- Safely install the product in a place that can hold the weight of the product.
  - A lack of strength may cause the product to fall.
- Take a comfortable and natural position to relax the muscles when working with a product.

⚠ CAUTION

- Install the product where no Electromagnetic Interference occurs.
- If you install the product in a place that does not meet the recommended conditions, this may cause serious damage to the product's picture quality, life cycle, and appearance. Please check with service engineer before installing. Please do not install the product in places such as where there is an abundance of fine dust or oil mist, chemical substances are used, exposed to direct sunlight, the temperature is very high or low, the humidity is very high.
- Make sure the product is well ventilated by Installing at a distance (100 mm or more) from the wall.
  - If you install the product too close to the wall, it may be deformed or fire can break out due to internal heat buildup.
- Do not cover the product with a tablecloth or a curtain or other materials (e.g. plastic) while plugged in. Do not block the ventilation hole of the product.
  - The product can be deformed or fire can break out due to overheating inside the product.
- Do not install the product in an area with poor ventilation (e.g. on a bookshelf, in a closet) or outside and avoid placing on cushions or carpets.
  - The product could catch fire due to overheating inside the product.
- Install the product on a flat and stable place that is large enough to support the product.
  - If the product is dropped, you may be injured or the product may be broken.
- When installing the product on a shelf or cabinet, make sure that the bottom end of the product is not protruding forward.
  - The product may fall due to unbalanced center of gravity, which may cause personal injury or damage to the product. Be sure to use cabinets or shelves that fit your product.

Precautions for Cleaning the Product

WARNING

- Keep the product clean at all times.
  - If you don't clean the unit for a long time and it becomes covered in dust, it can cause fire or product damage.
- When you need to clean the inside of the product, you must contact the service center.
  - Otherwise, cleaning without support may cause a fire, electric shock, or damage to the product.
- When cleaning the product, unplug the power cord and wipe gently with a soft cloth to prevent scratching.
  - An electric shock may occur or damage to the screen if its scratched.
- Do not physically come in contact with the screen of the LED Package.
  - This may cause damage to the product.
- To clean the product, use an air gun to lightly remove dust from the front frame and the screen.
  - If there are foreign substances in between the LEDs on the screen, it may cause a defect on the screen.

CAUTION

- When cleaning the product or the screen, unplug the power cord and wipe it gently with a soft cloth. Do not spray water or other liquids directly on the product. Especially, do not clean your product with chemicals including glass cleaner, any type of air freshener, insecticide, lubricants, wax (car, industrial), abrasive, thinner, benzene, alcohol, etc., which can damage the product or its panel.
  - This may result in fire, electric shock or product damage (deformation, corrosion or breakage).

Precautions for Using the Product

WARNING

- Do not use the product in any environment with excessively high temperatures or humidity.
  - It may cause electrical shock or damage the product.
- If you use the product for a long period of time, take a rest from time to time to protect your vision.
  - Extended viewing could result in impaired vision.
- Listening at high volume or using for a long time can cause damage to your hearing.
- In the event that liquid or a foreign object falls into the product, please switch it off and unplug it from the wall outlet and contact the service center.
  - Otherwise, the product may cause fire or electric shock.
- In the event that no image appears on the screen or no sound is heard, stop using the product. Switch it off immediately, unplug it from the power outlet and contact the service center.
  - Otherwise, the product may cause fire or electric shock.
- Do not drop an object or impact on the product or screen.
  - It can cause injury to human, problem to product and damage the screen.
- If you can smell smoke or other odors or hear a strange sound, unplug the power cord and contact the service center.
  - If you continue to use the product without taking proper measures, it may cause electrical shock or fire.
- Do not attempt to disassemble, repair or modify the product yourself. Please contact service center if you need to repair it.
  - Fire or electric shock can occur.
- Do not place objects filled with liquids such as vases, cups etc. on or over the product to prevent liquid from entering the product.
  - Failure to do so may result in fire, electric shock, malfunction or deformation.
- Do not push hard on or scratch the product's surface with your hands or sharp objects, such as nails, pencils or pens. Do not shock or scratch the front and sides of the screen with metallic objects.
  - This may damage the products and cause it to malfunction.
- Do not touch the product if it has been exposed to sunlight or an intense light because it could be hot.

- Do not use high voltage electrical goods near the product (e.g., a bug zapper).
  - This may result in product malfunction if it receives an electrical shock.
- If there is a gas leak, do not touch the outlet, and open the windows for ventilation.
  - Otherwise, the product may cause fire or electric shock.
- If you dropped the product or the case is broken, turn off the product and unplug the power cord.
  - If you continue to use without taking proper measures, electrical shock or fire can occur. Contact the service center.
- Keep small accessories out of the reach of children.
  - If a child swallows it, consult a doctor immediately.
- Keep out of reach of children from the product. Also, do not throw toys or objects at the product or screen.
  - It can cause injury to human, problem to product and damage the screen.
- All the power sources must be disconnected by removing the power cables to remove all power from the unit.

⚠ CAUTION

- This panel is an advanced product that contains millions of pixels. You may occasionally see pixel spots when viewing the screen. Since these deactivated pixels are not a defect, the performance and reliability of the product is not affected.
- Do not put or store inflammable substances near the product.
  - There is a danger of explosion or fire.
- Keep the proper distance from the product.
  - It can cause damage to your vision if you look at the product too closely.
- Set the appropriate resolution and frequency by products.
  - It can cause damage to your vision.
- Take a regular break when working with the product for a long time.

Precautions for Using the Remote control

WARNING

- Avoid places with high humidity.
  - It may cause electrical shock or damage the product.
- Do not expose batteries to excessive heat, such as direct sunlight, open fireplace, and electric heaters.
  - It may cause fire and you may be injured.
- Make sure that children do not swallow the remote control batteries when you replace them. Keep batteries out of reach of children.
  - If a child swallows a battery, consult a doctor immediately.
- Do not dispose of batteries in a fire.
  - Please dispose batteries at a local recycling center or a retail store that handles batteries.
- Used batteries, which include rechargeable batteries, should be recycled separately from waste.
  - Please dispose used batteries and rechargeable batteries at a local recycling center or a retail store that handles batteries.

CAUTION

- Do not short circuit and disassemble of batteries.
  - It may cause electrical shock or fire.
- The remote control may not function properly in sunlight or under a strong lamp. Move the product if it is being used in these conditions.
- Check if there is any obstacle between the product and the remote control.
- Do not mix new batteries with old batteries.
  - Overheating or leaking batteries may cause fire or electric shock.
- Only use the specified type of battery. Do not insert batteries that are not rechargeable into the charger.
  - Overheating or leaking batteries may cause fire or electric shock.

Product Disposal

- Do not dispose of this product with general household waste.
- Disposal of this product must be carried out in accordance to the regulations of your local authority.

ASSEMBLING AND PREPARING

CAUTION

- Always use genuine components to ensure safety and durability of the product.
- The product warranty will not cover damage or injury caused by the use of unauthorised components.
- Replacing the batteries with the wrong type may result in explosion.
- Batteries that have reached end-of-life should be disposed in an appropriate manner.

NOTE

- The accessories provided with your product may vary depending on the model.
- Product specifications or contents in this manual may be changed without prior notice due to upgrade of product functions.
- The warranty will not cover any damage caused by using the product in an excessively dusty environment.
- SuperSign Software & Manual
  - Visit *http://partner.lge.com* to download the latest SuperSign software and manual.

How to Connect a Cable to the IR-APL Ports

- Use an IR-APL LAN cable that is less than 5 meters long.
- IR-APL connection synchronizes the average picture level (APL) across products. Dynamic Brightness should be turned on during this process.
- A LAN cable should connect to the IR-APL ports in a closed loop. Refer to the basic connection layout below on how to connect a cable.

Basic Connection Layout for IR-APL LAN Cables

- Example) Connecting three products

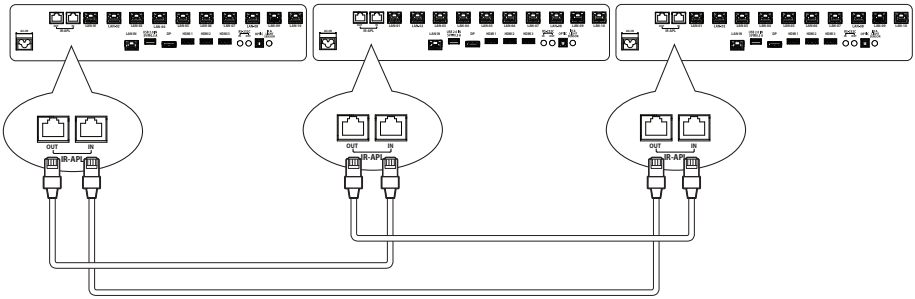

NOTE

- An incorrectly connected cable will result in the APL functioning abnormally.

Precautions for Using the IR-APL Port

- Use the ferrite core to reduce the electromagnetic interference in the IR-APL LAN cable.
  Wrap the IR-APL LAN cable once on the ferrite core B and 3 times on the ferrite core A.
  Place the ferrite core close to the set and an external device.

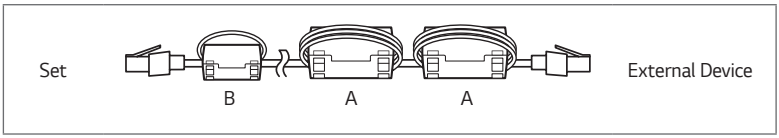

- A ferrite core can be used if it satisfies the specifications below.

	ITEM	IMPEDANCE		Manufacturer
A (Gray)	BNF-2629	10 MHz	80 Ω Min.	FEELUX Co.,Ltd.
		25 MHz	110 Ω Min.	
		100 MHz	110 Ω Min.	
B (Black)	BNF-2629	10 MHz	440 Ω Min.	FEELUX Co.,Ltd.
		12 MHz	475 Ω Min.	
		15 MHz	505 Ω Min.	
		20 MHz	535 Ω Min.	
		40 MHz	549 Ω Min.	

Optional Accessories

Without prior notice, optional accessories are subject to change to improve the performance of the product, and new accessories may be added. The illustrations in this manual may differ from the actual product and optional accessories.

LED Screen
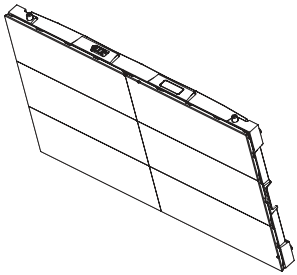
LSAB007-*2, LSAB009-*16, LSAB009-*23, LSAB009-*15, LSAB009-*3 **LSAB012-*12, LSAA012-*5, LSAA012-*6, LSAC012*, LSAC018*, LSAC025*** **LSAQ009-*1, LSAB012-*2, LSAB007-*22, LSAB009-*32** **LSAB009-*33, LSAB012-*22, LSAQ012-*2**

NOTE

- Optional accessories are only available for some models. If necessary, please purchase them separately.

Parts and Buttons

The illustrations may differ depending on the model.

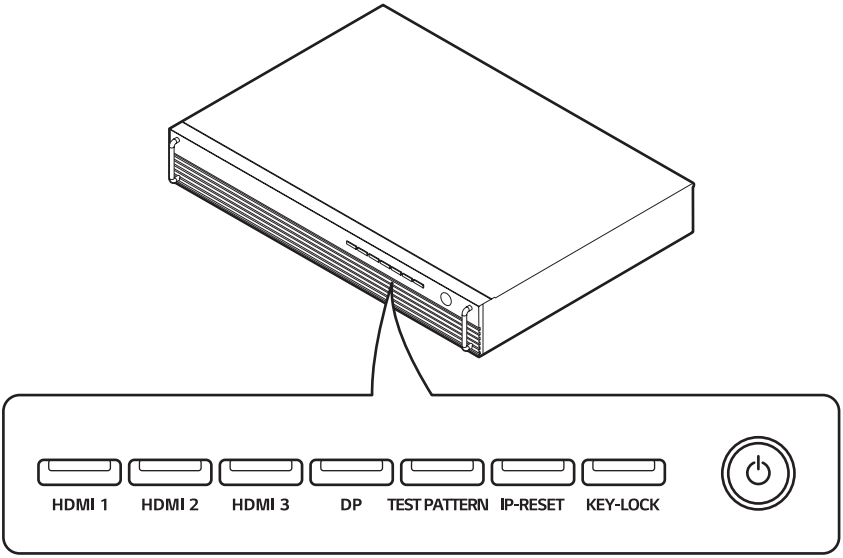

	Explanation
⏻	• Turns the power on and off.
HDMI 1	• Switches to HDMI 1 input.
HDMI 2	• Switches to HDMI 2 input.
HDMI 3	• Switches to HDMI 3 input.
DP	• Switches to DP input.
TEST PATTERN	• Consecutively accesses/exits White/Red/Green/Blue Pattern.
IP-RESET	• Press and hold for 3 seconds or more to set the IP address to 192.168.0.101.
KEY-LOCK	• Press and hold for 3 seconds or more to access/exit Key Lock.

NOTE

- If you press **TEST PATTERN** to access the corresponding pattern, HDMI/DP screen will not be available. If you want to switch to the external input screen, repeatedly press the button until you exit from the pattern.

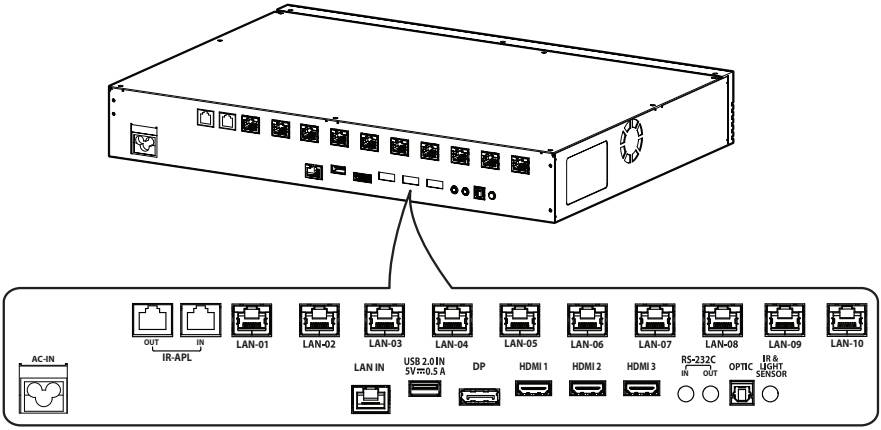
OUT
IN
IR-APL
LAN-01
LAN-02
LAN-03
LAN-04
LAN-05
LAN-06
LAN-07
LAN-08
LAN-09
LAN-10
AC-IN
LAN IN
USB 2.0 IN
5V⎓0.5 A
DP
HDMI 1
HDMI 2
HDMI 3
RS-232C
IN
OUT
OPTIC
IR &
LIGHT
SENSOR

Rack Installation (Optional)

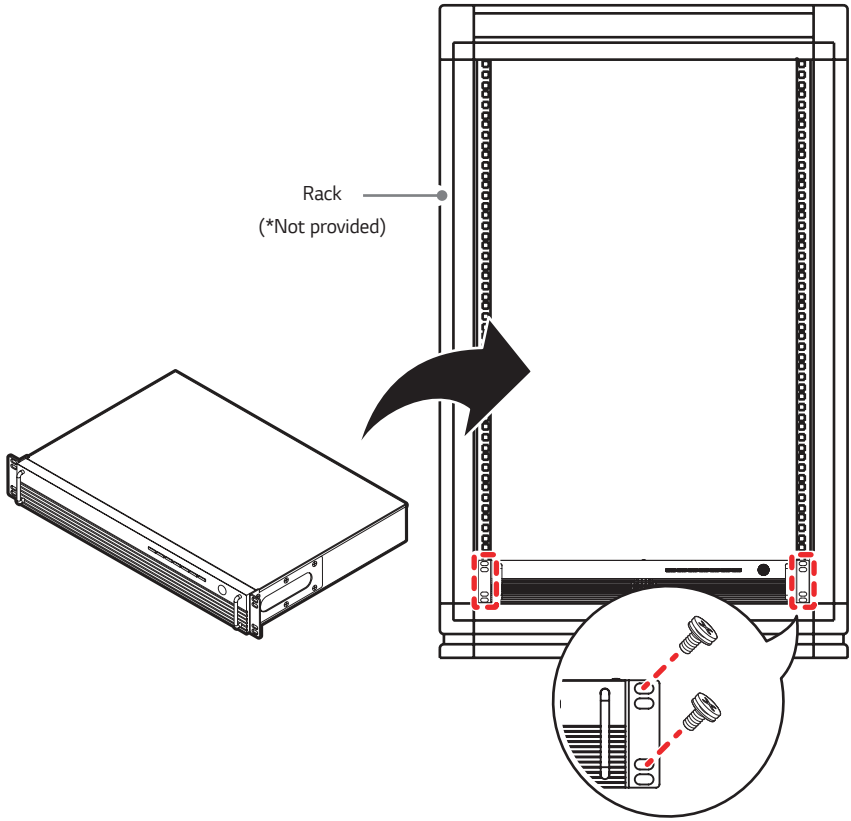

NOTE

- Use the bolts included in the rack to fasten the product.

Connecting LAN

Connect the LAN cable with the set.

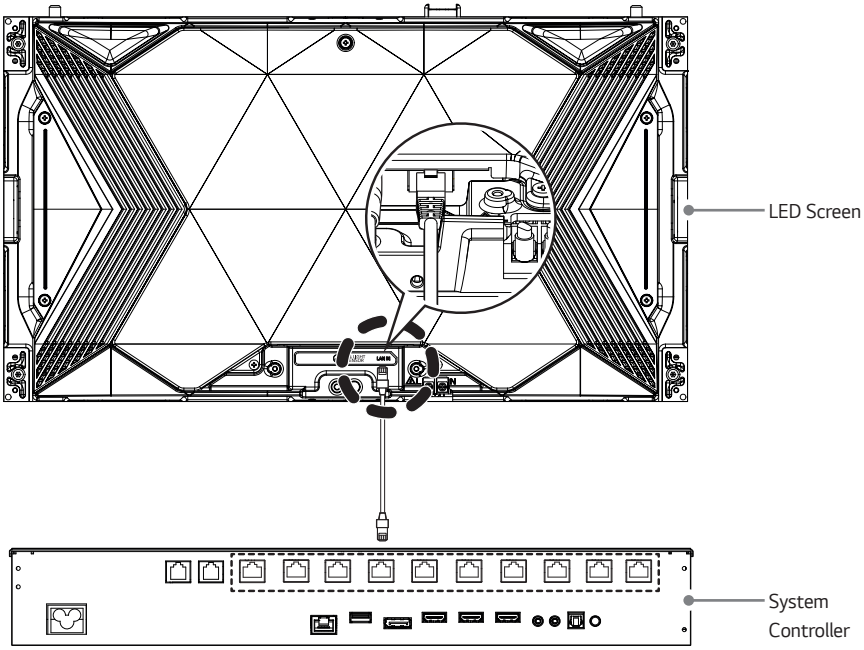

System Controller	LED Screen
CSAD	LSAB007-*2, LSAB009-*16, LSAB009-*23, LSAB009-*15, LSAB009-*3, LSAB012-*12, LSAA012-*5, LSAA012-*6, LSAC012*, LSAC018*, LSAC025*, LSAQ009-*1, LSAB012-*2, LSAB007-*22, , LSAB009-*32, LSAB009-*33, LSAB012-*22, LSAQ012-*2

⚠ CAUTION

- Check the direction so that the LAN cable is not damaged.
- Inserting the LAN cable with excessive force may damage the contact point.
- The LAN IN port is for the administrator.

IR Receiver

This allows a remote control sensor to be placed in a custom location. All products can receive signals normally after the infrared receiver terminal (IR & LIGHT SENSOR) is connected to the IR.

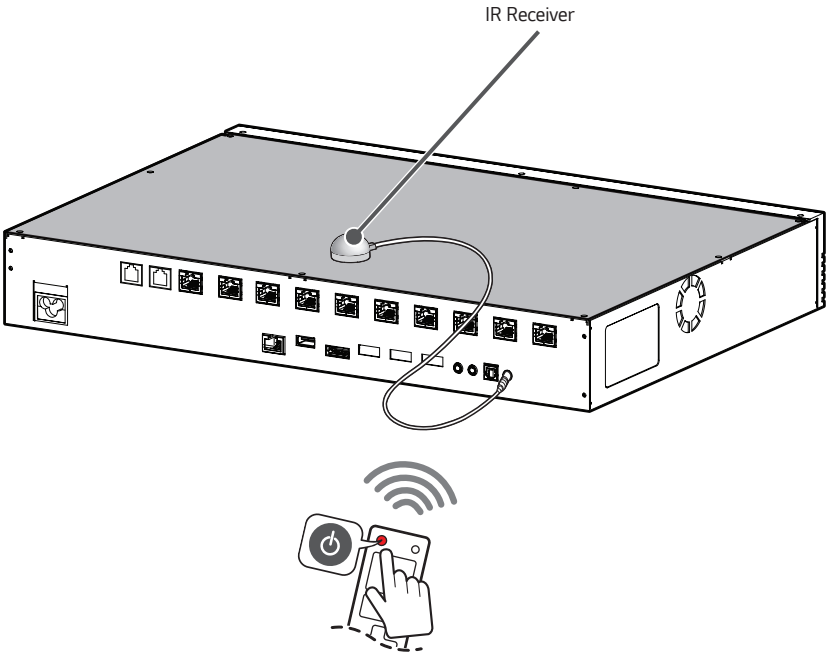

REMOTE CONTROL

The descriptions in this manual are based on the buttons on the remote control. Please read this manual carefully to use the monitor correctly. To install batteries, open the battery cover, place batteries (1.5 V AAA) matching ⊕ and ⊖ terminals to the labels inside the compartment, and close the battery cover. To remove the batteries, perform the installation actions in reverse. The illustrations may differ from the actual accessories.

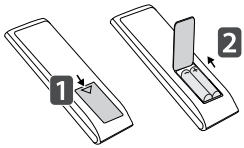

⚠ CAUTION

- Do not mix old and new batteries, as this may damage the remote control.
- Ensure the remote control is always pointed toward the monitor's IR receiver.
- Some features of the remote control may not be supported in certain models.
- The product's internal and external batteries should not be exposed to excessive heat such as direct sunlight, fire, or the like.

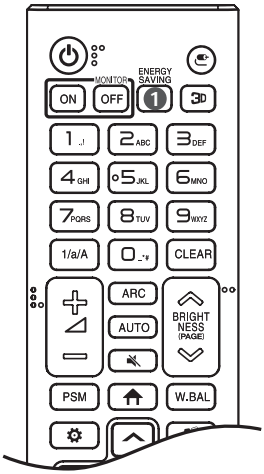

⏻ (POWER) Turns the monitor on or off.

MONITOR ON Turns the monitor on.

MONITOR OFF Turns the monitor off.

❶ **ENERGY SAVING** Reduces power consumption by adjusting peak screen brightness.

(INPUT) Selects the input mode.

3D Used for viewing 3D video. (This function is not supported.)

Number and Alphabet buttons

Enters numerical or alphabetical characters depending upon the setting.

1/a/A Toggles between numerical and alphabetical. (This function is not supported.)

CLEAR Deletes the entered numerical or alphabetical character.

(Volume Up/Down Button) Adjusts the volume level.

ARC Selects the screen size.

AUTO Automatically adjusts picture position and minimises image instability. (This is supported only for the RGB input.)

(MUTE) Mutes all sounds.

BRIGHTNESS Adjusts the brightness of the display.

(PAGE) Moves to the previous or next screen.

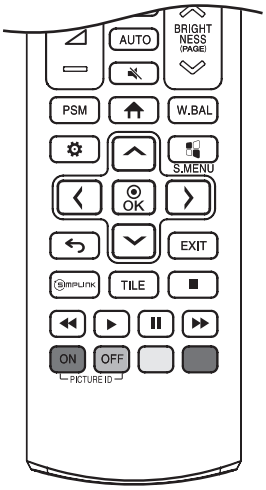

PSM Selects the Picture Mode.

(HOME) Activates the Launcher.

W.BAL Enters the White Balance menu.

(SETTINGS) Accesses the main menus or saves your input and exit menus.

S.MENU SuperSign menu key. (This function is not supported.)

, OK After selecting the menu, select and adjust functions.

(BACK) Returns to the previous level.

EXIT Closes the menu.

SIMPLINK Allows you to control various multimedia devices to enjoy multimedia simply by using the remote control through the SimpLink menu.

TILE You can choose to turn TILE Mode on/off.

(Control buttons) Controls media playback.

PICTURE ID ON/OFF When the Picture ID number matches the Set ID number, you can control whichever monitor you want in multi-display format.

- **ON**: Individually control the monitors with an image ID assigned to each of them.
- **OFF**: Control the monitors at once.

MAKING CONNECTIONS

Connecting to PC

The CSAD model itself does not have any screen. You can use the screen by connecting it to the LSAB007-*2, LSAB009-*16, LSAB009-*23, LSAB009-*15, LSAB009-*3, LSAB012-*12, LSAA012-*5, LSAA012-*6, LSAC012*, LSAC018*, LSAC025*, LSAQ009-*1, LSAB012-*2, LSAB007-*22, LSAB009-*32, LSAB009-*33, LSAB012-*22, LSAQ012-*2 model.

CSAD supports the Plug and Play[1)] feature.

[1)] Plug and Play: a feature that enables a PC to recognise devices attached by the user without device configuration or user intervention when powering up.

Connecting to External Devices

Connect a HD receiver, DVD, or VCR player to the product and select an appropriate input mode.
For the best picture quality, use a HDMI cable to connect the product to external devices.

NOTE

- For the best image quality using a HDMI connection is recommended.
- To comply with the specifications of the product, use a shielded interface HDMI cable with a ferrite core.
- Fasten the cables with cable ties to minimise electromagnetic interference.
- Use a High Speed HDMI®/™ cable.
- If you want to use HDMI-PC mode, you must set your input to PC mode.
- You may experience compatibility issues if you use a HDMI cable to connect to a PC.
- Use a certified cable that displays the HDMI logo. The screen may not appear or a connection error could occur if a non-certified cable is used.
- Recommended HDMI Cable Types
  - High Speed HDMI®/™ Cable
  - High Speed HDMI®/™ Ethernet Cable

CAUTION

- Connect the signal input cable and check whether it is inserted properly into the connector.
- If you are using a DP to HDMI dongle, use products that have been verified by graphics card manufacturers.
- If you are connecting the graphics card to multiple-channel ports, use the same DP to HDMI dongle model.

Using the Input List

(HOME) →
- HDMI 1 → HDMI 2 → HDMI 3 → DisplayPort

Connecting Multiple Monitors

To use multiple products, first connect an external device to the product, connect one end of the supported signal input cable to the OUT connector of the product, and then connect the other end to the IN connector of the product you wish to connect to.

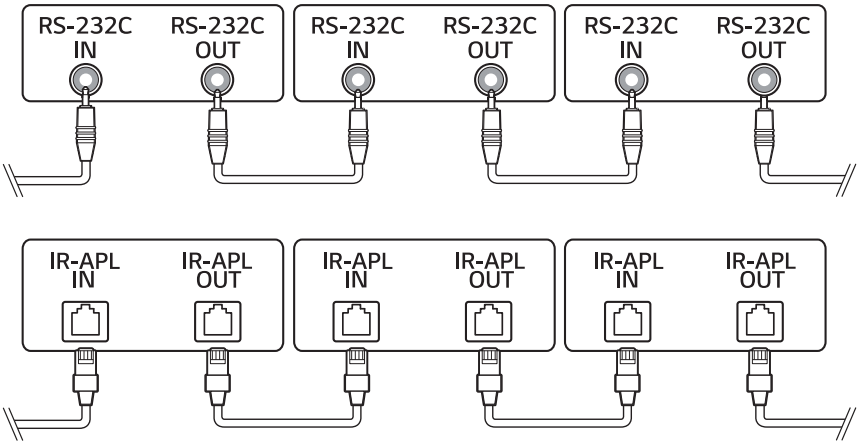

NOTE

- Daisy chaining the video output may be limited depending on the performance of the input device that supports HDCP.

CONNECT A USB DEVICE

Connect a USB storage device, such as a USB flash memory to the display device to use multimedia features.

⚠ CAUTION

- Do not turn the Device off or remove the USB storage device when the multimedia screen is activated. This may cause the loss of a file or damage to a USB storage device.
- Back up your files saved on a USB storage device frequently, as you may lose or damage the files and this may be not covered by the warranty.
- Devices using a power source such as a USB HDD are not supported.
- For USB 3.0 devices, compatibility is not guaranteed.

Tips for Using USB Devices

- Only USB storage devices are recognised.
- A USB storage device using an automatic recognition program may not be recognised.
- A USB storage device which uses its own driver may not be recognised.
- The recognition speed of a USB storage device may depend on each device.
- Please do not turn off the display or unplug the USB device when the connected USB storage device is working. When such a device is suddenly disconnected or unplugged, the stored files or the USB storage device may be damaged.
- Please do not connect USB storage devices which were artificially created on the PC. The device may cause the product to malfunction or fail to play.
- Storage devices formatted with utility programs that are not supported by Windows may not be recognised.
- Please connect power to a USB storage device (over 0.5 A) which requires an external power supply. Otherwise, the device may not be recognised.
- Please connect a USB storage device with the cable offered by the device maker.
- Some USB storage devices may not be supported or operated smoothly.
- The file arrangement method for USB storage devices is similar to that of Windows, and file names can be recognised up to 100 English characters.
- Be sure to back up important files since data stored in a USB memory device may be damaged. We will not be responsible for any data loss.
- If your USB storage device has multiple partitions, or if you use a USB multi-card reader, you can use up to four partitions or USB memory devices.
- If a USB storage device is connected to a USB multi-card reader, its volume data may not be detected.
- If the USB storage device does not work properly, remove it and connect it again.
- The speed at which a USB storage device is detected differs from device to device.
- The recommended capacity is 32 GB or less for a USB memory drive.
- Any device with more than the recommended capacity may not work properly.
- USB storage devices (USB 2.0 or below) are also supported.
- The exFAT file system may not work properly for USB storage devices.

TROUBLESHOOTING

No image is displayed.

- Is the power cord connected to the product?
  - Check if the power cord is correctly plugged into the power outlet.

The 'Unknown Product' message appears when the product is connected.

- Did you install the driver?
  - Check if the Plug and Play function is supported by referring to the graphics card user manual.

The screen image looks abnormal.

- Is the screen position wrong?
  - Check if the graphics card resolution and frequency are supported by the product. If the frequency is out of range, set to the recommended resolution in the "Display" settings in Control Panel.
- The screen is displayed abnormally.
  - The proper input source is not connected to the port. Connect a cable that matches the input source signal.

The display colour is abnormal.

- Screen has poor colour resolution (16 colours).
  - Set the colour depth to more than 24 bits (true colour). To do this, select (Control Panel) → (Display) → (Setting) → (Colour Palette) on Windows. (May differ depending on your operating system (OS).)
- Screen colour is unstable or mono-coloured.
  - Check the connection status of the signal cable. Or, re-insert the PC graphics card.

The operation does not work normally.

- The power suddenly turned off.
  - Is the Timer set?
  - Check the power control settings. Power supply is interrupted.

PRODUCT SPECIFICATIONS

Without prior notice, all product information and specifications contained in this manual are subject to change to improve the performance of the product.

The ~ symbol means alternating current, and the symbol ⎓ means direct current.

Video Signal	Max Resolution	HDMI/DisplayPort: 3840 x 2160 @ 60 Hz - This may not be supported on some OS or graphics card types.
	Recommended Resolution	HDMI/DisplayPort: 3840 x 2160 @ 60 Hz - This may not be supported on some OS or graphics card types.
	Horizontal Frequency	HDMI/DisplayPort: 30 kHz to 135 kHz
	Vertical Frequency	HDMI/DisplayPort: 30 Hz to 60.31 Hz
	Synchronization	Separate Sync/Digital
Input/Output Ports		IR-APL IN/OUT, LAN-01 ~ LAN-10, LAN IN, USB 2.0 IN, DP IN, HDMI IN 1, HDMI IN 2, HDMI IN 3, RS-232C IN/OUT, OPTIC OUT, IR & LIGHT SENSOR IN, AC IN
Power	Rated Voltage	100-240 V~ 50/60 Hz 1.0 A
Embedded Battery		Applied
Environmental Conditions	Operating Temperature	0 °C to 40 °C
	Operating Humidity	10 % to 80 %
	Storage Temperature	-20 °C to 60 °C
	Storage Humidity	5 % to 85 %
Dimensions (Width x Depth x Height) / Weight		446 mm x 290 mm x 63 mm / 5.1 kg

(Unit: mm)

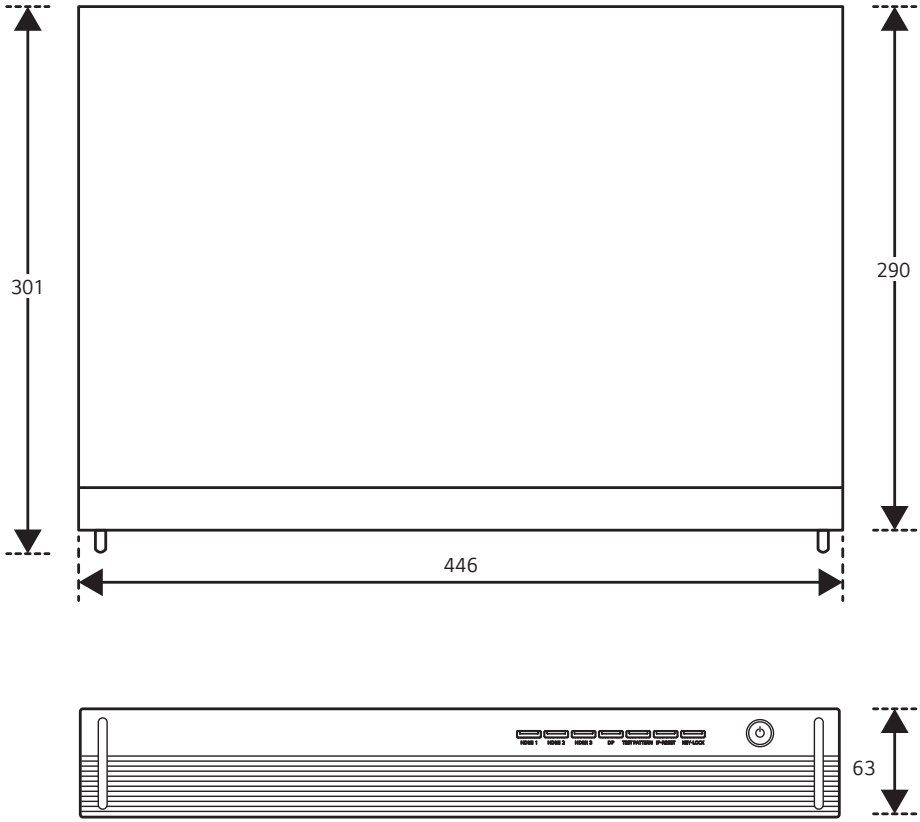

HDMI 1,2,3/DisplayPort (PC) Support Mode

Resolution	Horizontal Frequency (kHz)	Vertical Frequency (Hz)
800 x 600	37.879	60.317
1024 x 768	48.363	60
1280 x 720	44.772	59.855
1280 x 1024	63.981	60.02
1680 x 1050	65.29	59.954
1920 x 1080	67.5	60
3840 x 2160	67.5	30
3840 x 2160	135	60

HDMI 1,2,3/DisplayPort (DTV) Support Mode

Resolution	Horizontal Frequency (kHz)	Vertical Frequency (Hz)
480/60p	31.5	60
576/50p	31.25	50
720/50p	37.5	50
720/60p	45	60
1080/50i	28.1	50
1080/60i	33.75	60
1080/50p	56.25	50
1080/60p	67.432	59.94
1080/60p	67.5	60
2160/30p	67.5	30
2160/50p	112.5	50
2160/60p	135	60
2160/24p	54	24
2160/25p	56.25	25

NOTE

- Horizontal Frequency: The horizontal interval is the time taken to display one horizontal line. When one horizontal line is divided by the horizontal interval, the number of horizontal lines displayed every second is the horizontal frequency. The unit is kHz.
- Vertical Frequency: The monitor screen functions by the screen image changing dozens of times every second like a fluorescent lamp. The vertical frequency or refresh rate is the number of image displays per second. The unit is Hz.

LICENSES

Supported licenses may differ by model. For more information of the licenses, visit *www.lg.com*.

HDMI™
HIGH-DEFINITION MULTIMEDIA INTERFACE

The terms HDMI, HDMI High-Definition Multimedia Interface, HDMI trade dress and the HDMI Logos are trademarks or registered trademarks of HDMI Licensing Administrator, Inc.

Manufactured under license from Dolby Laboratories. Dolby, Dolby Vision, Dolby Vision IQ, Dolby Audio, Dolby Atmos, and the double-D symbol are trademarks of Dolby Laboratories Licensing Corporation.

For DTS patents, see *http://patents.dts.com*. Manufactured under license from DTS Licensing Limited. DTS, the Symbol, & DTS and the Symbol together, DTS 2.0 Channel, DTS 2.0+Digital Out, DTS-HD, and DTS Virtual:X are registered trademarks or trademarks of DTS, Inc. in the United States and/or other countries. © DTS, Inc. All Rights Reserved.

HEVC Advance™
Covered by patents at patentlist.accessadvance.com

The model and serial number of the product are located on the back and on one side of the product. Record them below in case you ever need service.

MODEL

SERIAL NO.

Temporary noise is normal when powering ON or OFF this device.