LG
Life's Good

MFL71949168230 6REV01

QNED80*

www.lg.com

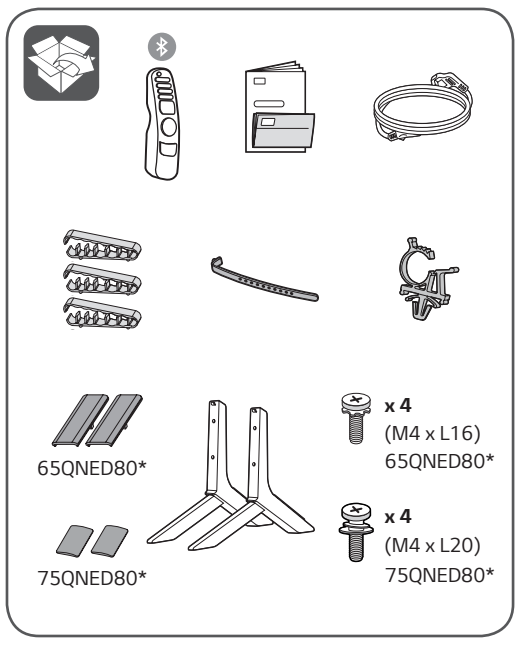

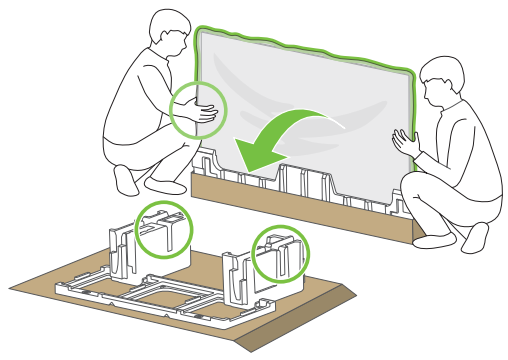

1

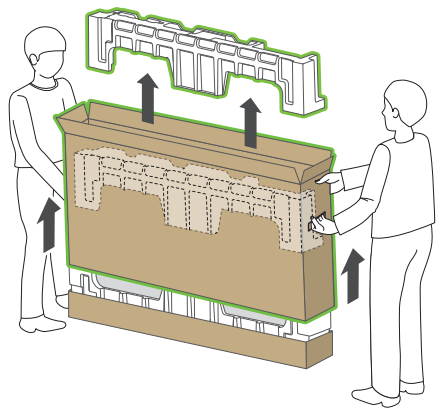

2

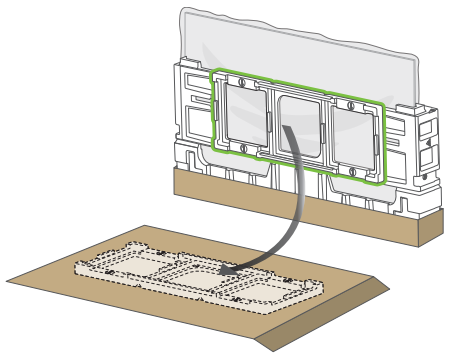

3

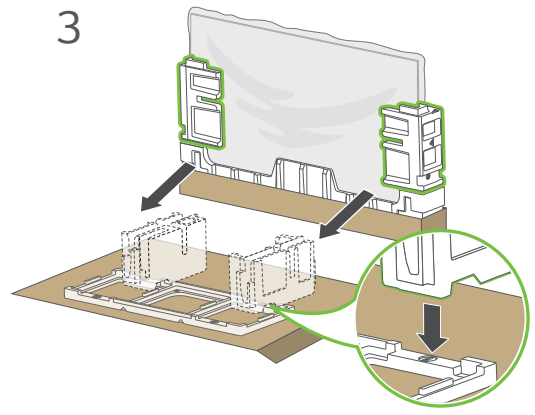

4

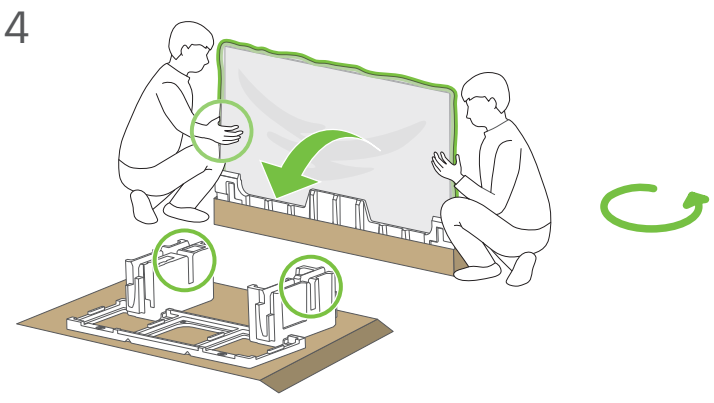

5

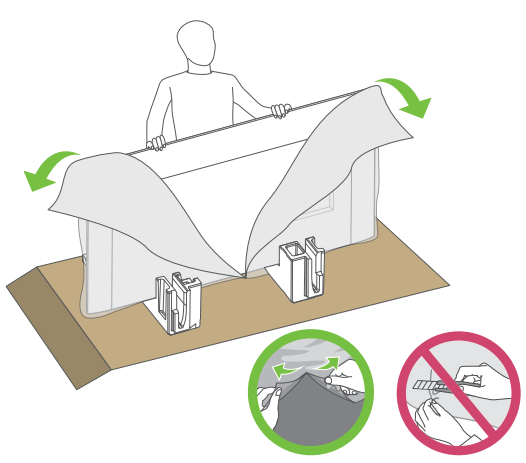

6

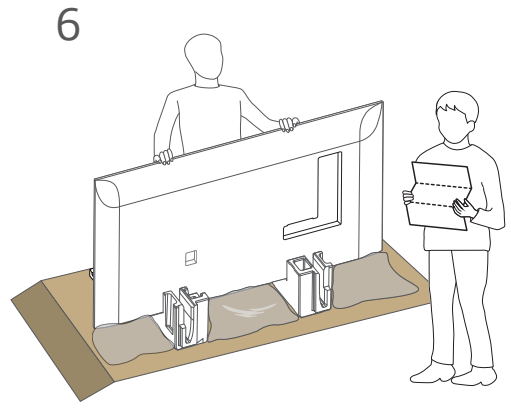

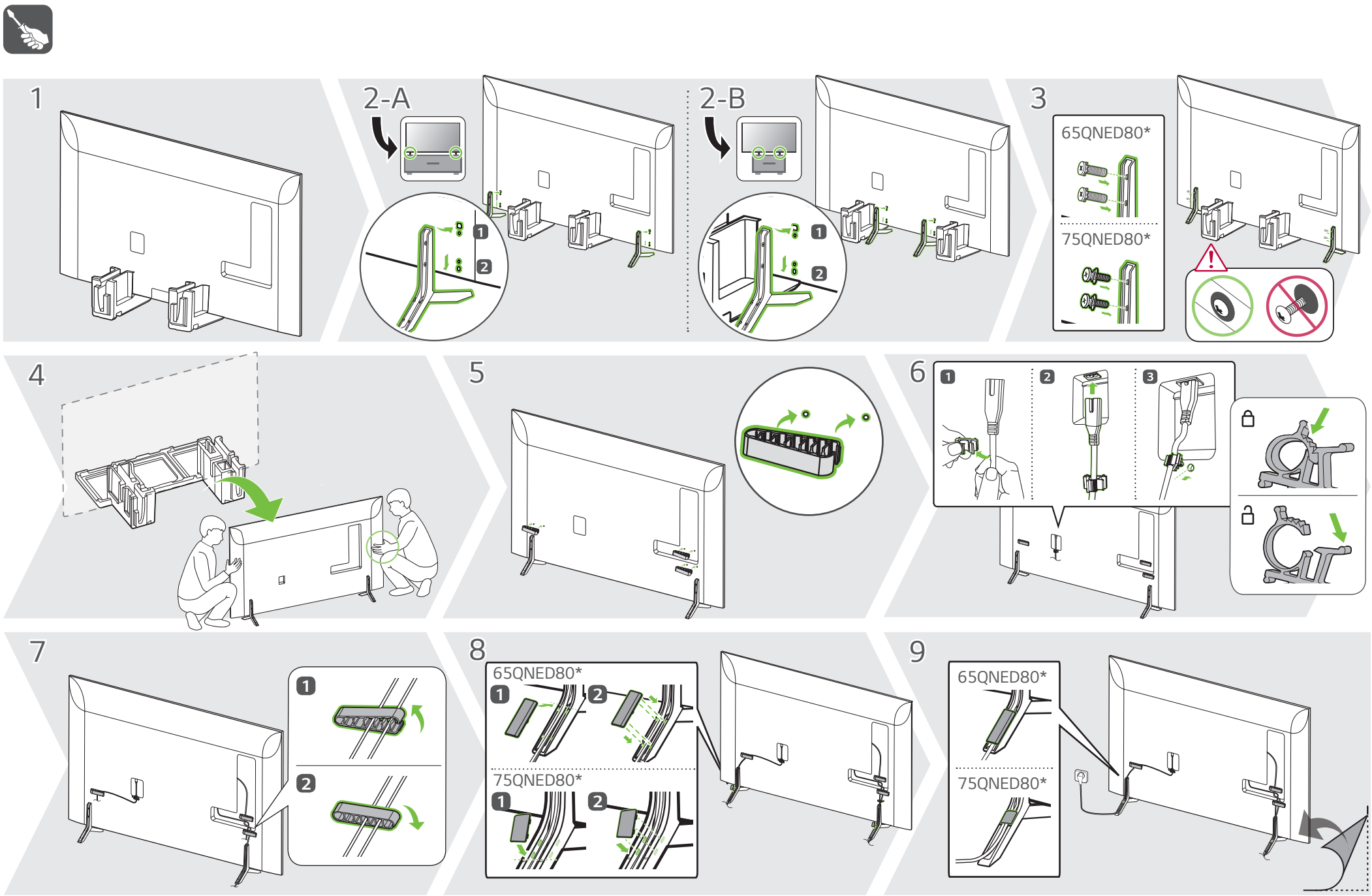

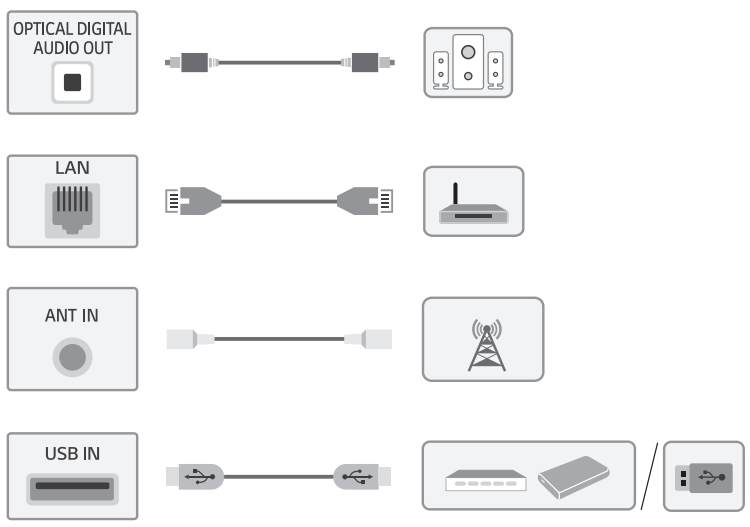

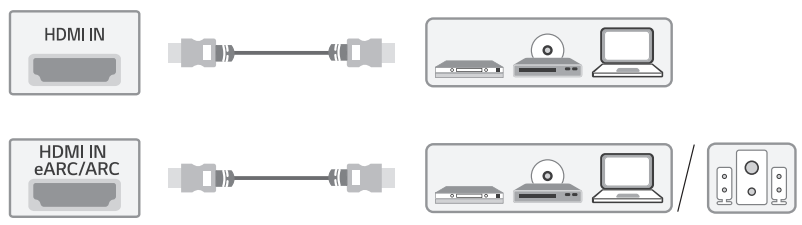

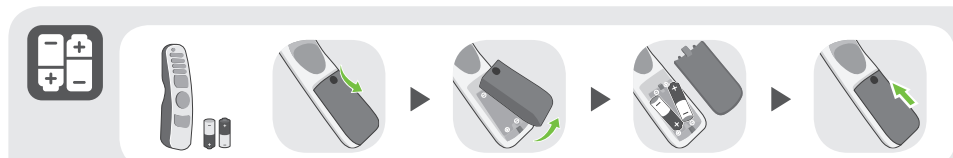

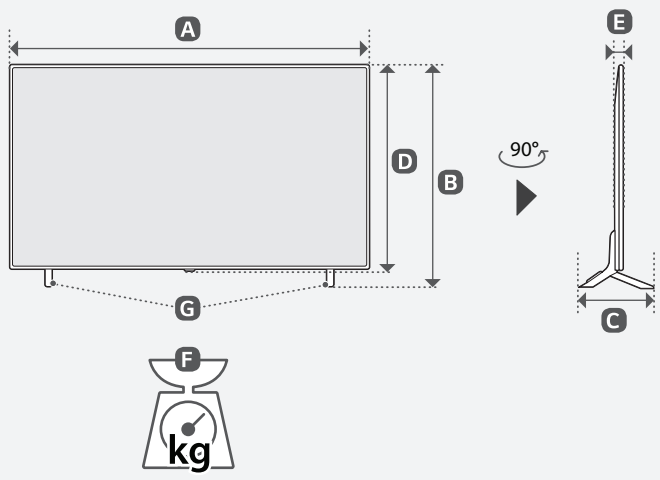

	A	B	C	D	E	F	F - G
	(mm)					(kg)	
65QNED80SRA 65QNED806RA	1456	904	295	840	29.7	22.9	22.5
75QNED80SRA 75QNED806RA	1677	1032	359	965	30.9	34.0	33.0

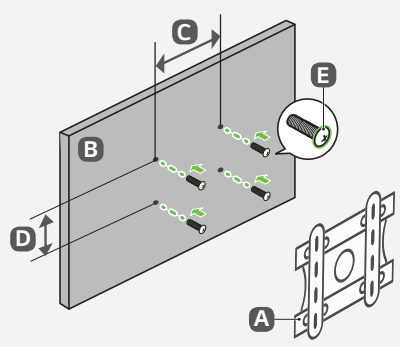

A	B	C x D (mm)	E
OLW480B	65QNED80*	300 x 300	M6
OLW480B	75QNED80*	400 x 300	M6

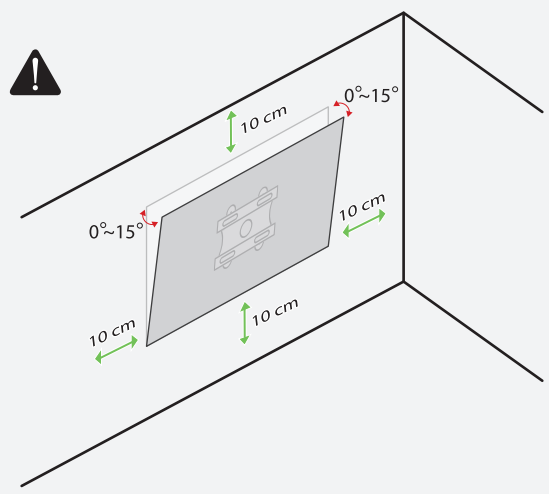

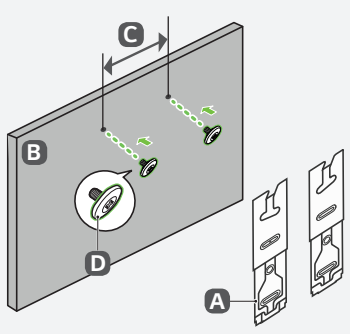

A	B	C (mm)	D
WB21LMB	65QNED80*	300	M6