ENGLISH

BAHASA INDONESIA

繁體中文

INSTALLATION MANUAL

AIR CONDITIONER

Please read this installation manual completely before installing the product. Installation work must be performed in accordance with the national wiring standards by authorized personnel only.
Please retain this installation manual for future reference after reading it thoroughly.

Ceiling Concealed Duct - Middle Static
Original instruction

MFL68821910
Rev.04_101123

www.lg.com

Copyright © 2018 - 2023 LG Electronics Inc. All Rights Reserved.

TABLE OF CONTENTS

3 FEATURES

4 SAFETY PRECAUTIONS

8 INSTALLATION

8 Selection of the best location
9 Ceiling dimension and hanging bolt location
10 Indoor Unit Installation
10 Wiring Connection
11 Checking the Drainage
12 Indoor Unit Drain Piping
14 DIP Switch Setting
15 Group Control Setting
20 Airborne Noise Emission
20 Limiting concentration

21 HOW TO SET E.S.P?

Features

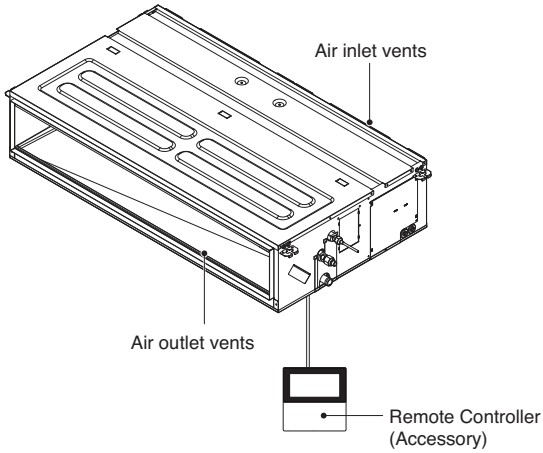

Installation Tool

Name	Drain hose	Vinyl	Clamp metal	Washer for hanging bracket	Clamp (Tie Wrap)	Insulation for fitting	Other
Quantity	1 EA	1 EA	2 EA	8 EA	4 EA	1 SET	
Shape					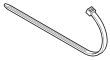	for gas pipe for liquid pipe	• Owner's manual • Installation manual

Safety Precautions

To prevent injury to the user or other people and property damage, the following instructions must be followed.

■ Incorrect operation due to ignoring instruction will cause harm or damage. The seriousness is classified by the following indications.

⚠ **WARNING**	This symbol indicates the possibility of death or serious injury.
⚠ **CAUTION**	This symbol indicates the possibility of injury or damage to properties only.

■ Meanings of symbols used in this manual are as shown below.

⃠	**Be sure not to do.**
❗	**Be sure to follow the instruction.**

⚠ WARNING

Installation

- Do not use a defective or underrated circuit breaker. Use this appliance on a dedicated circuit.
  - There is risk of fire or electric shock.
- For electrical work, contact the dealer, seller, a qualified electrician, or an Authorized Service Center.
  - Do not disassemble or repair the product. There is risk of fire or electric shock.
- Always ground the product.
  - There is risk of fire or electric shock.
- Install the panel and the cover of control box securely.
  - There is risk of fire or electric shock.
- Always install a dedicated circuit and breaker.
  - Improper wiring or installation may cause fire or electric shock.
- Use the correctly rated breaker or fuse.
  - There is risk of fire or electric shock.
- Do not modify or extend the power cable.
  - There is risk of fire or electric shock.
- Do not install, remove, or re-install the unit by yourself (customer).
  - There is risk of fire, electric shock, explosion, or injury.
- Be cautious when unpacking and installing the product.
  - Sharp edges could cause injury. Be especially careful of the case edges and the fins on the condenser and evaporator.
- For installation, always contact the dealer or an Authorized Service Center.
  - There is risk of fire, electric shock, explosion, or injury.
- Do not install the product on a defective installation stand.
  - It may cause injury, accident, or damage to the product.
- Be sure the installation area does not deteriorate with age.
  - If the base collapses, the air conditioner could fall with it, causing property damage, product failure, and personal injury.
- Do not turn on the breaker or power under condition that front panel, cabinet, top cover, control box cover are removed or opened.
  - Otherwise, it may cause fire, electric shock, explosion or death.

- Use a vacuum pump or Inert (nitrogen) gas when doing leakage test or air purge. Do not compress air or Oxygen and Do not use Flammable gases. Otherwise, it may cause fire or explosion.
  - There is the risk of death, injury, fire or explosion.

Operation

- Do not let the air conditioner run for a long time when the humidity is very high and a door or a window is left open.
  - Moisture may condense and wet or damage furniture.
- Take care to ensure that power cable could not be pulled out or damaged during operation.
  - There is risk of fire or electric shock.
- Do not place anything on the power cable.
  - There is risk of fire or electric shock.
- Do not plug or unplug the power supply plug during operation.
  - There is risk of fire or electric shock.
- Do not touch(operate) the product with wet hands.
  - There is risk of fire or electrical shock.
- Do not place a heater or other appliances near the power cable.
  - There is risk of fire and electric shock.
- Do not allow water to run into electric parts.
  - There is risk of fire, failure of the product, or electric shock.
- Do not store or use flammable gas or combustibles near the product.
  - There is risk of fire or failure of product.
- Do not use the product in a tightly closed space for a long time.
  - Oxygen deficiency could occur.
- When flammable gas leaks, turn off the gas and open a window for ventilation before turn the product on.
  - Do not use the telephone or turn switches on or off.
    There is risk of explosion or fire.
- If strange sounds, smell or smoke comes from product. Turn the breaker off or disconnect the power supply cable.
  - There is risk of electric shock or fire.
- Stop operation and close the window in storm or hurricane.
  If possible, remove the product from the window before the hurricane arrives.
  - There is risk of property damage, failure of product, or electric shock.
- Do not open the inlet grille of the product during operation.
  (Do not touch the electrostatic filter, if the unit is so equipped.)
  - There is risk of physical injury, electric shock, or product failure.
- When the product is soaked (flooded or submerged), contact an Authorized Service Center.
  - There is risk of fire or electric shock.
- Be cautious that water could not enter the product.
  - There is risk of fire, electric shock, or product damage.
- Ventilate the product from time to time when operating it together with a stove, etc.
  - There is risk of fire or electric shock.
- Turn the main power off when cleaning or maintaining the product.
  - There is risk of electric shock.
- When the product is not be used for a long time, disconnect the power supply plug or turn off the breaker.
  - There is risk of product damage or failure, or unintended operation.
- Take care to ensure that nobody could step on or fall onto the outdoor unit.
  - This could result in personal injury and product damage.

⚠ CAUTION

Installation

- Always check for gas (refrigerant) leakage after installation or repair of product.
  - Low refrigerant levels may cause failure of product.
- Install the drain hose to ensure that water is drained away properly.
  - A bad connection may cause water leakage.
- Keep level even when installing the product.
  - To avoid vibration or water leakage.
- Do not install the product where the noise or hot air from the outdoor unit could damage the neighborhoods.
  - It may cause a problem for your neighbors.
- Use two or more people to lift and transport the product.
  - Avoid personal injury.
- Do not install the product where it will be exposed to sea wind (salt spray) directly.
  - It may cause corrosion on the product. Corrosion, particularly on the condenser and evaporator fins, could cause product malfunction or inefficient operation.
- In order to avoid a hazard due to inadvertent resetting of the thermal cut-out, this appliance must not be supplied through an external switching device, such as a timer, or connected to a circuit that is regularly switched on and off by the utility.
- If the supply cord is damaged, it must be replaced by the manufacturer, its service agent or similarly qualified persons in order to avoid a hazrd.
- This equipment shall be provided with a supply conductor complying with the national regulation.
- Means for disconnection must be incorporated in the fixed wiring in accordance with the wiring rules.
- Do not install the unit in potentially explosive atmospheres.

Operation

- Do not expose the skin directly to cool air for long periods of time. (Don't sit in the draft.)
  - This could harm to your health.
- Do not use the product for special purposes, such as preserving foods, works of art, etc. It is a consumer air conditioner, not a precision refrigeration system.
  - There is risk of damage or loss of property.
- Do not block the inlet or outlet of air flow.
  - It may cause product failure.
- Use a soft cloth to clean. Do not use harsh detergents, solvents, etc.
  - There is risk of fire, electric shock, or damage to the plastic parts of the product.
- Do not touch the metal parts of the product when removing the air filter. They are very sharp!
  - There is risk of personal injury.
- Do not step on or put anything on the product. (outdoor units)
  - There is risk of personal injury and failure of product.
- Always insert the filter securely. Clean the filter every two weeks or more often if necessary.
  - A dirty filter reduces the efficiency of the air conditioner and could cause product malfunction or damage.
- Do not insert hands or other objects through the air inlet or outlet while the product is operated.
  - There are sharp and moving parts that could cause personal injury.
- Do not drink the water drained from the product.
  - It is not sanitary and could cause serious health issues.
- Use a firm stool or ladder when cleaning or maintaining the product.
  - Be careful and avoid personal injury.

- Replace the all batteries in the remote control with new ones of the same type. Do not mix old and new batteries or different types of batteries.
  - There is risk of fire or explosion.
- Do not recharge or disassemble the batteries. Do not dispose of batteries in a fire.
  - They may burn or explode.
- If the liquid from the batteries gets onto your skin or clothes, wash it well with clean water. Do not use the remote if the batteries have leaked.
  - The chemicals in batteries could cause burns or other health hazards.
- If you eat the liquid from the batteries, brush your teeth and see doctor. Do not use the remote if the batteries have leaked.
  - The chemicals in batteries could cause burns or other health hazards.

Installation

Read completely, then follow step by step.

Selection of the best location

Install the air conditioner in the location that satisfies the following conditions.

- The place shall easily bear a load exceeding four times the indoor unit's weight.
- The place shall be able to inspect the unit as the figure.
- The place where the unit shall be leveled.
- The place shall allow easy water drainage.
- The place shall easily connect with the outdoor unit.
- The place where the unit is not affected by an electrical noise.
- The place where air circulation in the room will be good.
- There should not be any heat source or steam near the unit.

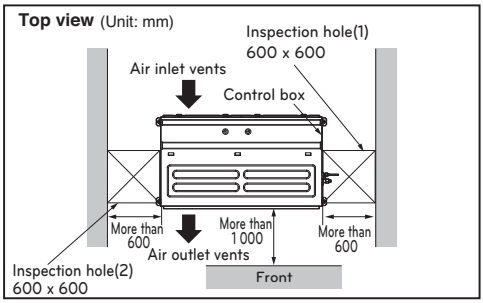

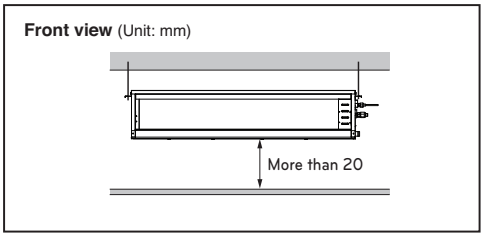

⚠ CAUTION

In case that the unit is installed near the sea, the installation parts may be corroded by salt, The installation parts (and the unit) should be taken appropriate anti-corrosion measures.

[Inspection Hole Standard]

Number of inspection hole	Distance between false ceiling & actual ceiling	Remarks
1	More than 100 cm	Sufficient space in the ceiling for servicing.
2	20 cm to 100 cm	Insufficient space. Difficult for servicing
Hole size should be more than the size of IDU.	Less than 20 cm	Minimum height for motor replacement.

Ceiling dimension and hanging bolt location

■ Installation of Unit

Install the unit above the ceiling correctly.

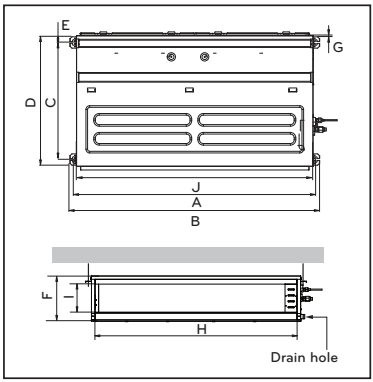

POSITION OF SUSPENSION BOLT

- Apply a joint-canvas between the unit and duct to absorb unnecessary vibration.
- Install the unit leaning to a drainage hole side as a figure for easy water drainage.
- A place where the unit will be leveled and that can support the weight of the unit.
- A place where the unit can withstand its vibration.
- A place where service can be easily performed.

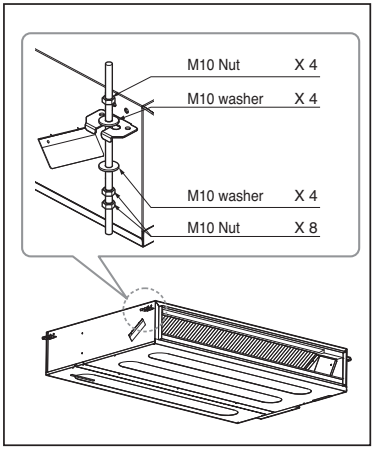

(Unit:mm)

Dimension / Chassis name	A	B	C	D	E	F	G	H	I	J
M1	933.4	971.6	619.2	700	30	270	15.2	858	201.4	900
M2	1 283.4	1 321.6	619.2	700	30	270	15.2	1 208	201.4	1 250
M3	1 283.4	1 321.6	619.2	700	30	360	15.2	1 208	291.4	1 250

NOTICE

- Throughly study the following installation locations:

1. In such places as restaurants and kitchens, considerable amount of oil steam and flour adhere to the fan, the fin of the heat exchanger, resulting in heat exchange reduction, spraying, dispersing of water drops, etc. In these cases, take the following actions:
   - Make sure that the ventilation fan for smoke-collecting hood on a cooking table has sufficient capacity so that it draws oily steam which should not flow into the suction of the air conditioner.
   - Make enough distance from a cooking room to install the air conditioner in such a place where it may not suck in oil steam.
2. Avoid installing air conditioner in such circumstances where cutting oil mist or iron powder is in suspension in factories, etc.
3. Avoid places where inflammable gas is generated, flows in, is stored or vented.
4. Avoid places where sulfurous acid gas or corrosive gas is generated.
5. Avoid places near high frequency generators.

Indoor Unit Installation

- Select and mark the position for fixing bolts.
- Drill the hole for set anchor on the face of ceiling.

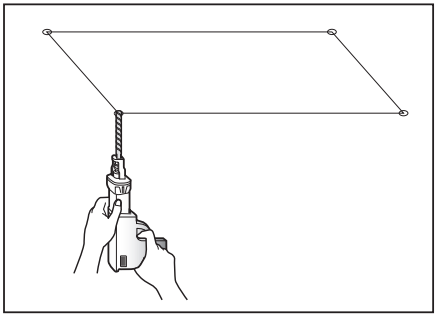

- Insert the set anchor and washer onto the suspension bolts for locking the suspension bolts on the ceiling.
- Mount the suspension bolts to the set anchor firmly.
- Secure the installation plates onto the suspension bolts (adjust level roughly) using nuts, washers and spring washers.

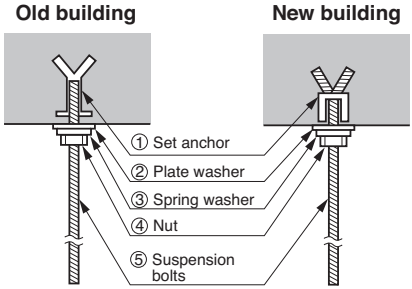

⚠ CAUTION

Tighten the nut and bolt to prevent unit falling.

Wiring Connection

Connect the wires to the terminals on the control board individually according to the outdoor unit connection.

- Ensure that the color of the wires of outdoor unit and the terminal No. are the same as those of indoor unit respectively.

<M1 Chassis>

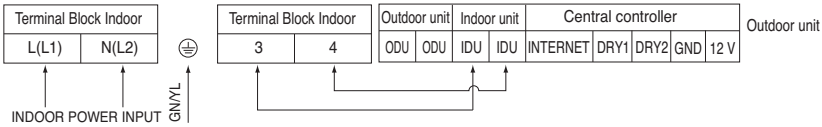

<M2/M3 Chassis>

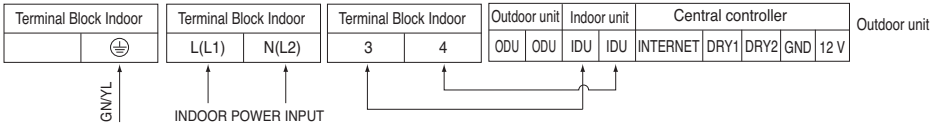

⚠ WARNING

Make sure that the screws of the terminal are free from looseness.

Clamping of cables

1) Arrange 2 power cables on the control panel.
2) First, fasten the steel clamp with a screw to the inner boss of control panel.
3) For the cooling model, fix the other side of the clamp with a screw strongly. For the heat pump model, put the 0.75 mm^2 cable(thinner cable) on the clamp and tighten it with a plastic clamp to the other boss of the control panel.

⚠ CAUTION

The Power cord connected to the unit should be selected according to the following specifications.

INSULATION, OTHERS	Insulate the joint and tubes completely.

THERMAL INSULATION All thermal insulation must comply with local requirement.

INDOOR UNIT

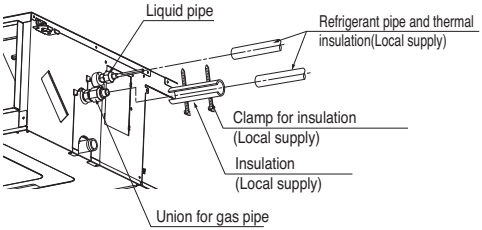

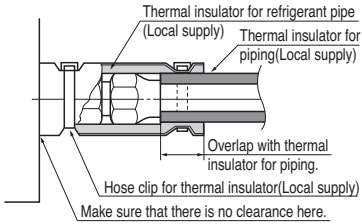

Checking the Drainage

1. Remove the Air Filter.

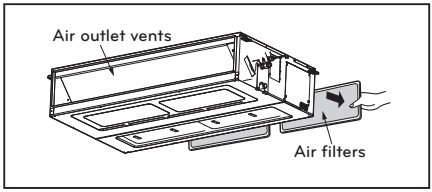

2. Check the drainage.

- Spray one or two glasses of water upon the evaporator.
- Ensure that water flows drain hose of indoor unit without any leakage.

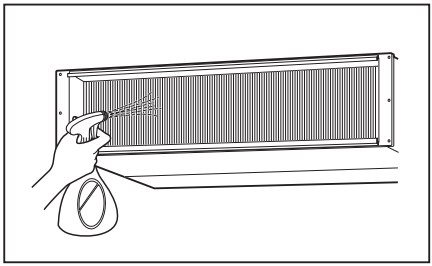

⚠ CAUTION

1. **Install declination** of the indoor unit is very **important for the drain** of the duct type air conditioner.
2. Minimum thickness of the insulation for the connecting pipe shall be 5 mm.

Front of view

• The unit must be horizontal or declined to the drain hose connected when finished installation.

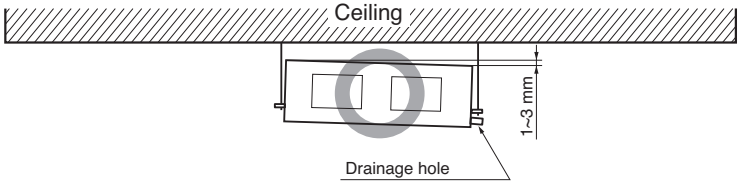

Indoor Unit Drain Piping

• Drain piping must have down-slope (1/50 to 1/100): be sure not to provide up-and-down slope to prevent reversal flow.
• During drain piping connection, be careful not to exert extra force on the drain port on the indoor unit.
• The outside diameter of the drain connection on the indoor unit is 32 mm.

Piping material: Polyvinyl chloride pipe inner diometes Ø 25 mm and pipe fittings

• Be sure to install heat insulation on the drain piping.

Heat insulation material: Polyethylene foam with thickness more than 8 mm.

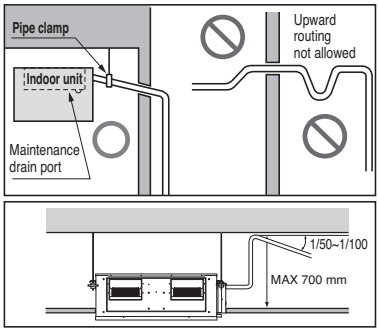

Drain test

The air conditioner uses a drain pump to drain water.
Use the following procedure to test the drain pump operation:

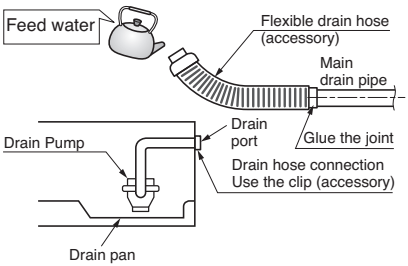

• Connect the main drain pipe to the exterior and leave it provisionally until the test comes to an end.
• Feed water to the flexible drain hose and check the piping for leakage.
• Be sure to check the drain pump for normal operation and noise when electrical wiring is complete.
• When the test is complete, connect the flexible drain hose to the drain port on the indoor unit.

⚠ CAUTION

The supplied flexible drain hose should not be strained. A strained hose may cause leakage of water.

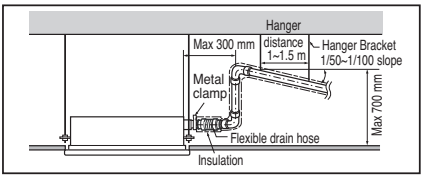

⚠ CAUTION

After the confirmation of the above conditions, prepare the wiring as follows:

1) Never fail to have an individual power specialized for the air conditioner. As for the method of wiring, be guided by the circuit diagram posted on the inside of control box cover.

2) Provide a circuit breaker switch between power source and the unit.

3) The screws which fasten the wiring in the casing of electrical fittings are liable to come loose from vibrations to which the unit is subjected during the course of transportation. Check them and make sure that they are all tightly fastened. (If they are loose, it could give rise to burn-out of the wires.)

4) Specification of power source

5) Confirm that electrical capacity is sufficient.

6) Be sure that the starting voltage is maintained at more than 90 percent of the rated voltage marked on the name plate.

7) Confirm that the cable thickness is as specified in the power sources specification. (Particularly note the relation between cable length and thickness.)

8) Never fail to equip a leakage breaker where it is wet or moist.

9) The following troubles would be caused by voltage drop-down.

- Vibration of a magnetic switch, damage on the contact point, fuse breaking, disturbance by the normal function of an overload protection device.
- Proper starting power is not given to the compressor.

HAND OVER

Teach the customer the operation and maintenance procedures, using the operation manual.
(air filter cleaning, temperature control, etc.)

NOTICE

Refer to the table below when selecting the circuit breaker.

- Use the circuit breaker instead of fuse.
- MFA(Maximum Fuse Amperes) is used to select the circuit breaker and ground fault circuit interrupter.

Capacity (kBtu/h)	MFA (A)
7	15
9	15
12	15
15	15
18	15
24	15
28	15
36	15
42	15
48	15
54	15

⚠ WARNING

- Don't install an individual switch or electrical outlet to disconnect each of indoor unit separately from the power supply.
- Install the main switch that can interrupt all the power sources in an integrated manner because this system consists of the equipment utilizing the multiple power sources.

DIP Switch Setting

1. Indoor Unit

	Function	Description	Setting Off	Setting On	Default
SW1	Communication	N/A (Default)	-	-	Off
SW2	Cycle	N/A (Default)	-	-	Off
SW3	Group Control	Selection of Master or Slave	Master	Slave	Off
SW4	Dry Contact Mode	Selection of Dry Contact Mode	Wired/Wireless remote controller selection of Manual or Auto operation Mode	Auto	Off
SW5	Installation	Fan continuous operation	Continuous operation Removal	-	Off
SW6	Heater linkage	N/A	-	-	Off
SW7	Ventilator linkage	Selection of Ventilator linkage	Linkage Removal	Working	Off
	Vane selection (Console)	Selection of up/down side Vane	Up side + Down side Vane	Up side Vane Only	
	Region selection	Selection tropical region	General model	Tropical model	
SW8	Etc.	Spare	-	-	Off

⚠ CAUTION

For Multi V Models, DIP switch 1, 2, 6, 8 must be set OFF.

2. Outdoor Unit

In case that the products meet specific conditions, “Auto addressing” function can start automatically with the improved speed by turning the DIP switch #3 of the outdoor unit and resetting the power.

※ Specific conditions:
- All names of the indoor units are ARNU****4.
- The serial number of Multi V super IV (outdoor units) is after October 2013.

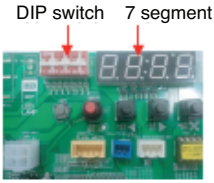

Outdoor Unit PCB

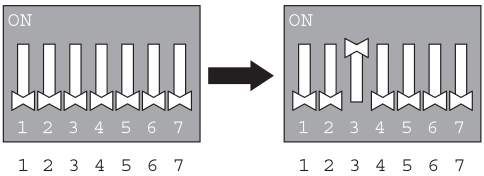

Outdoor Unit DIP Switch

Group Control Setting

1. Group Control 1

■ Wired remote controller 1 + Standard Indoor Units

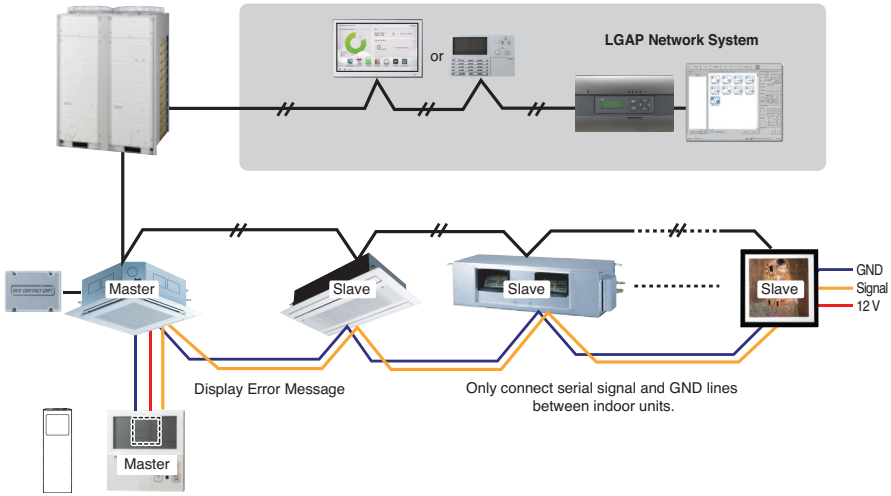

■ DIP Switch in PCB

① Master Setting
- No. 3 Off

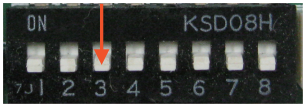

② Slave Setting
- No. 3 On

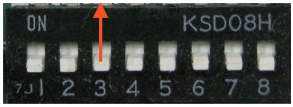

Indoor Unit DIP Switch

Some products have no DIP switch on PCB. It is possible to set indoor units to Master or Slave by using the wireless remote controller instead of DIP switch.
For the details of the setting, please refer to the manual of the wireless remote controller.

1. **It is possible to 16 indoor units(Max.) by one wired remote controller.**
   Set only one indoor unit to Master, set the others to Slave.
2. **It is possible to connect with every type of indoor units.**
3. **It is possible to use wireless remote controller at the same time.**
4. **It is possible to connect with Dry Contact and Central controller at the same time.**
   - The Master indoor unit is possible to recognize Dry Contact and Central Controller only.
5. **In case that any error occurs at indoor unit, the error code is displayed on the wired remote controller.**
   It is possible to control the other indoor units except the error units.

❊ It is possible to connect indoor units since Feb. 2009.
❊ It can be the cause of malfuctions when there is no setting of master and slave.

❊ In case of Group Control, it is possible to use following functions.
- Selection of operation, stop or mode
- Temperature setting and room temperature check
- Current time change
- Control of flow rate (High/Middle/Low)
- Reservation settings

It is not possible to use some functions.

2. Group Control 2

■ Wired remote controllers + Standard Indoor Units

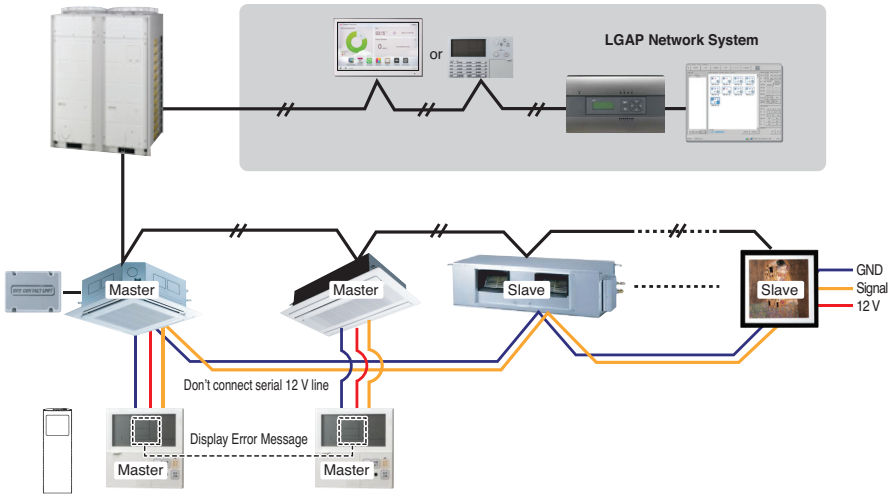

❊ It is possible to control 16 indoor units(Max.) with the master wired remote control.
❊ Other than those, it is same with the Group Control 1.

3. Group Control 3

■ Mixture connection with indoor units and Fresh Air Intake Unit

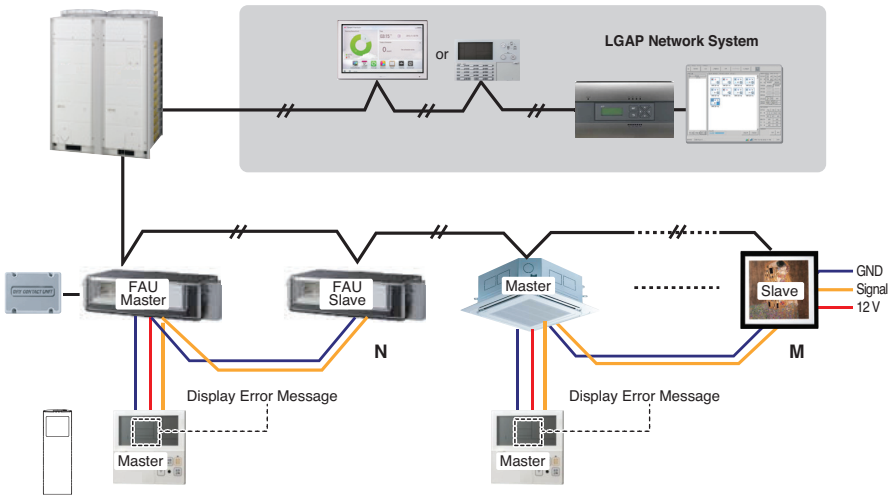

❊ In case of connecting with standard indoor unit and Fresh Air Intake Unit, separate Fresh Air Intake Unit with standard units. (N, M ≤ 16) (Because setting temperature are different.)

❊ Other than those, it is same with Group Control 1.

* FAU : Fresh Air Intake Unit
Standard : Standard Indoor Unit

4. 2 Remote Control

■ Wired remote controller 2 + Indoor unit 1

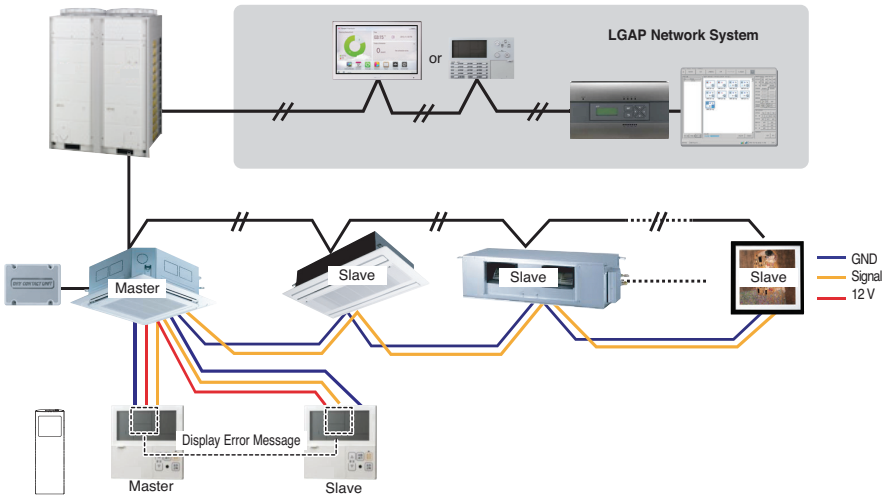

1. **It is possible to connect two wired remote controllers (Max.) with one indoor unit.**
   Set only one indoor unit to Master, set the others to Slave.
   Set only one wired remote controller to Master, set the others to Slave.
2. **Every types of indoor unit is possible to connect two remote controller.**
3. **It is possible to use wireless remote controller at the same time.**
4. **It is possible to connect with Dry Contact and Central controller at the same time.**
5. **In case that any error occurs at indoor unit, the error code is displayed on the wired remote controller.**
6. **There isn't limits of indoor unit function.**

5. Accessories for group control setting

It is possible to set group control by using below accessories.

Indoor unit 2 EA + Wired remote controller 1 EA	Indoor unit 1 EA + Wired remote controller 2 EA
❊ PZCWRCG3 cable used for connection 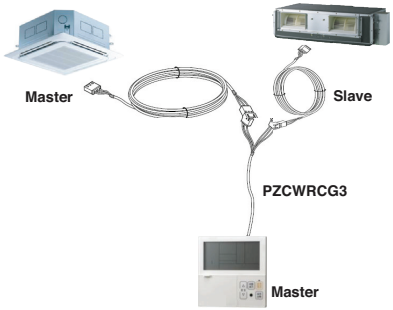	❊ PZCWRC2 cable used for connection 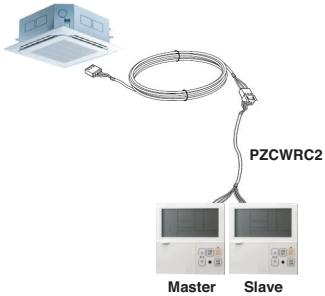

⚠ CAUTION

- **Apply totally enclosed noncombustible conduit in case of local building code Requiring plenum cable usage.**

Airborne Noise Emission

The A-weighted sound pressure emitted by this product is below 70 dB.
** The noise level can vary depending on the site.

The figures quoted are emission level and are not necessarily safe working levels. Whilst there is a correlation between the emission and exposure levels, this cannot be used reliably to determine whether or not further precautions are required. Factor that influence the actual level of exposure of the workforce include the characteristics of the work room and the other sources of noise, i.e. the number of equipment and other adjacent processes and the length of time for which an operator exposed to the noise. Also, the permissible exposure level can vary from country to country. This information, however, will enable the user of the equipment to make a better evaluation of the hazard and risk.

Limiting concentration

Limiting concentration is the limit of Freon gas concentration where immediate measures can be taken without hurting human body when refrigerant leaks in the air. The limiting concentration shall be described in the unit of kg/m^3 (Freon gas weight per unit air volume) for facilitating calculation

Limiting concentration: 0.44 kg/m^3 (R410A)

■ Calculate refrigerant concentration

$$\text{Refrigerant concentration} = \frac{\text{Total amount of replenished refrigerant in refrigerant facility (kg)}}{\text{Capacity of smallest room where indoor unit is installed (m}^3\text{)}}$$

How to Set E.S.P?

ARNU**GM1A4 (** : 07, 09, 12, 15, 18)

(Unit: CMM)

Setting value	Static Pressure (mmAq(Pa))							
	2.5(25)	4(39)	6(59)	8(78)	10(98)	12(118)	14(137)	15(147)
70	11.3	-	-	-	-	-	-	-
75	12.8	-	-	-	-	-	-	-
80	14.4	11.4	-	-	-	-	-	-
85	15.9	13.2	10.2	-	-	-	-	-
90	17.5	15.0	12.0	-	-	-	-	-
95	19.0	16.7	13.7	10.7	-	-	-	-
100	20.6	18.5	15.5	12.5	-	-	-	-
105	22.1	20.3	17.3	14.3	11.1	-	-	-
110	23.7	22.1	19.0	16.1	13.1	10.0	-	-
115	-	23.8	20.8	17.9	15.1	12.2	-	-
120	-	-	22.6	19.7	17.1	14.3	11.3	-
125	-	-	-	21.5	19.1	16.5	13.6	11.9
130	-	-	-	23.3	21.2	18.7	15.8	14.3
135	-	-	-	-	23.2	20.8	18.0	16.7
140	-	-	-	-	-	23.0	20.3	19.1
145	-	-	-	-	-	-	22.5	21.5
150	-	-	-	-	-	-	-	23.8

ARNU**GM1A4 (** : 24)

(Unit: CMM)

Setting value	Static Pressure (mmAq(Pa))							
	2.5(25)	4(39)	6(59)	8(78)	10(98)	12(118)	14(137)	15(147)
85	16.8	14.6	-	-	-	-	-	-
90	18.1	15.9	-	-	-	-	-	-
95	19.4	17.2	15.0	-	-	-	-	-
100	20.7	18.5	16.3	13.9	-	-	-	-
105	22.0	19.8	17.7	15.3	13.0	-	-	-
110	23.3	21.1	19.1	16.8	14.6	-	-	-
115	24.6	22.4	20.5	18.3	16.3	14.2	-	-
120	25.9	23.7	21.8	19.7	17.9	15.9	13.3	-
125	-	25.1	23.2	21.2	19.6	17.5	15.2	14.6
130	-	-	24.6	22.7	21.2	19.2	17.1	16.3
135	-	-	-	24.2	22.9	20.9	19.0	18.1
140	-	-	-	-	24.5	22.6	20.9	19.9

ARNU**GM2A4 (** : 07, 09, 12, 15)

(Unit: CMM)

Setting value	Static Pressure (mmAq(Pa))							
	4(39)	6(59)	8(78)	10(98)	12(118)	14(137)	16(157)	18(176)
65	4.7	-	-	-	-	-	-	-
70	10.3	-	-	-	-	-	-	-
75	15.0	-	-	-	-	-	-	-
80	19.0	7.6	-	-	-	-	-	-
85	24.9	13.8	4.9	-	-	-	-	-
90	27.6	20.4	7.8	-	-	-	-	-
95	30.4	24.4	15.7	5.2	-	-	-	-
100	33.1	28.7	20.8	9.2	3.8	-	-	-
105	35.9	31.7	24.1	17.5	6.7	-	-	-
110	38.6	34.7	30.5	22.2	11.5	5.5	-	-
115	40.1	37.8	33.8	27.9	20.2	9.1	-	-
120	-	39.1	37.1	31.4	24.6	17.9	7.5	-
125	-	-	38.5	35.0	30.1	21.2	11.0	6.7
130	-	-	-	37.1	32.0	27.6	15.6	10.0
135	-	-	-	-	36.8	31.5	24.3	16.2
140	-	-	-	-	40.5	35.9	29.8	22.4
145	-	-	-	-	-	39.9	34.9	27.8
150	-	-	-	-	-	-	39.4	34.2
155	-	-	-	-	-	-	-	37.1

Note: 1. The above table shows the correlation between the air rates and E.S.P.

2. Make sure to check and adjust E.S.P (external static pressure) value after the installation of the product. Otherwise, there is a risk of weak cooling/heating and condensed water discharge/drop.

ARNU**GM2A4 (** : 28, 36)

(Unit: CMM)

Setting value	Static Pressure (mmAq(Pa))							
	4(39)	6(59)	8(78)	10(98)	12(118)	14(137)	16(157)	18(176)
65	4.7	-	-	-	-	-	-	-
70	10.3	-	-	-	-	-	-	-
75	15.0	-	-	-	-	-	-	-
80	19.0	7.6	-	-	-	-	-	-
85	24.9	13.8	4.9	-	-	-	-	-
90	27.6	20.4	7.8	-	-	-	-	-
95	30.4	24.4	15.7	5.2	-	-	-	-
100	33.1	28.7	20.8	9.2	3.8	-	-	-
105	35.9	31.7	24.1	17.5	6.7	-	-	-
110	38.6	34.7	30.5	22.2	11.5	5.5	-	-
115	40.1	37.8	33.8	27.9	20.2	9.1	-	-
120	-	39.1	37.1	31.4	24.6	17.9	7.5	-
125	-	-	38.5	35.0	30.1	21.2	11.0	6.7
130	-	-	-	37.1	32.0	27.6	15.6	10.0
135	-	-	-	-	36.8	31.5	24.3	16.2
140	-	-	-	-	40.5	35.9	29.8	22.4
145	-	-	-	-	-	39.9	34.9	27.8
150	-	-	-	-	-	-	39.4	34.2
155	-	-	-	-	-	-	-	37.1

ARNU**GM2A4 (** : 42)

(Unit: CMM)

Setting value	Static Pressure(mmAq(Pa))							
	4(39)	6(59)	8(78)	10(98)	12(118)	14(137)	16(157)	18(176)
90	23.0	-	-	-	-	-	-	-
95	25.9	19.1	-	-	-	-	-	-
100	28.6	23.3	-	-	-	-	-	-
105	31.4	26.4	19.6	-	-	-	-	-
110	34.2	29.9	24.2	-	-	-	-	-
115	36.6	32.7	28.8	21.7	-	-	-	-
120	39.2	35.7	31.8	26.2	19.6	-	-	-
125	41.7	38.5	34.8	30.8	24.3	-	-	-
130	44.0	41.2	37.7	34.1	29.0	22.3	-	-
135	-	43.8	40.7	37.4	32.6	27.5	20.5	-
140	-	-	43.5	40.4	37.2	32.6	25.8	19.9
145	-	-	-	43.4	41.6	37.4	30.7	24.6
150	-	-	-	-	43.4	42.3	35.4	29.4
155	-	-	-	-	-	43.7	37.5	32.7

ARNU**GM3A4 (** : 18, 24, 28)

(Unit: CMM)

Setting value	Static Pressure (mmAq(Pa))								
	4(39)	6(59)	8(78)	10(98)	12(118)	14(137)	16(157)	18(177)	20(196)
70	25.2	-	-	-	-	-	-	-	-
75	30.4	21.4	-	-	-	-	-	-	-
80	35.0	27.2	18.5	-	-	-	-	-	-
85	39.8	35.4	24.6	-	-	-	-	-	-
90	44.3	40.1	31.5	22.7		-	-	-	-
95	49.3	44.8	36.8	28.8	21.4	-	-	-	-
100	53.0	49.4	44.6	35.4	27.7	-	-	-	-
105	57.2	54.1	49.2	43.0	35.0	26.5	-	-	-
110	-	58.8	53.9	47.9	42.4	33.8	24.3	14.8	-
115	-	-	58.6	52.9	47.8	42.5	31.4	20.3	18.3
120	-	-	-	57.8	53.1	48.2	39.2	30.2	24.6
125	-	-	-	-	-	49.4	43.1	36.7	33.1
130	-	-	-	-	-	52.7	48.6	44.4	39.6
135	-	-	-	-	-	-	-	50.2	45.2

Note: 1. The above table shows the correlation between the air rates and E.S.P.
2. Make sure to check and adjust E.S.P (external static pressure) value after the installation of the product. Otherwise, there is a risk of weak cooling/heating and condensed water discharge/drop.

ARNU**GM3A4 (** : 48, 54)

(Unit: CMM)

Setting value	Static Pressure (mmAq(Pa))						
	5(49)	6(59)	8(78)	10(98)	12(118)	14(137)	15(147)
70	25.1	-	-	-	-	-	-
75	29.5	26.1	-	-	-	-	-
80	34.0	30.8	25.9	-	-	-	-
85	38.4	35.4	30.6	23.2	-	-	-
90	42.9	40.1	35.2	28.1	21.0	-	-
95	47.3	44.8	39.9	33.1	26.3	19.5	-
100	51.8	49.4	44.6	38.0	31.7	25.2	22.6
105	56.2	54.1	49.2	43.0	37.1	31.0	28.5
110	-	58.8	53.9	47.9	42.4	36.7	34.4
115	-	-	58.6	52.9	47.8	42.5	40.3
120	-	-	-	57.8	53.1	48.2	46.1
125	-	-	-	-	54.2	49.4	47.3

ARNU**GM3B4 (** : 48, 54)

(Unit: CMM)

Setting value	Static Pressure (mmAq(Pa))								
	4(39)	6(59)	8(78)	10(98)	12(118)	14(137)	16(157)	18(177)	20(196)
70	25.2	-	-	-	-	-	-	-	-
75	30.4	21.4	-	-	-	-	-	-	-
80	35.0	27.2	18.5	-	-	-	-	-	-
85	39.8	35.4	24.6	-	-	-	-	-	-
90	44.3	40.1	31.5	22.7	-	-	-	-	-
95	49.3	44.8	36.8	28.8	21.4	-	-	-	-
100	53.0	49.4	44.6	35.4	27.7	-	-	-	-
105	57.2	54.1	49.2	43.0	35.0	26.5	-	-	-
110	-	58.8	53.9	47.9	42.4	33.8	24.3	14.8	-
115	-	-	58.6	52.9	47.8	42.5	31.4	20.3	18.3
120	-	-	-	57.8	53.1	48.2	39.2	30.2	24.6
125	-	-	-	-	-	49.4	43.1	36.7	33.1
130	-	-	-	-	-	52.7	48.6	44.4	39.6
135	-	-	-	-	-	-	55.3	50.2	45.2

ARNU**GM3A4 (** : 60)

(Unit: CMM)

Setting value	Static Pressure (mmAq(Pa))			
	5(49)	6(59)	8(78)	10(98)
70	25.1	-	-	-
75	29.5	26.1	-	-
80	34.0	30.8	25.9	-
85	38.4	35.4	30.6	23.2
90	42.9	40.1	35.2	28.1
95	47.3	44.8	39.9	33.1
100	51.8	49.4	44.6	38.0
105	56.2	54.1	49.2	43.0
110	-	58.8	53.9	47.9
115	-	-	58.6	52.9
120	-	-	-	57.8
125	-	-	-	-

Note: 1. The above table shows the correlation between the air rates and E.S.P.

2. Make sure to check and adjust E.S.P (external static pressure) value after the installation of the product. Otherwise, there is a risk of weak cooling/heating and condensed water discharge/drop.