ENGLISH Easy Setup Guide
Please read this manual carefully before operating your set and retain it for future reference.

ESPAÑOL Guía Rápida de Configuración
Lea atentamente este manual antes de poner en marcha el equipo y consérvelo para futuras consultas.

FRANÇAIS Guide de configuration rapide
Avant d'utiliser l'appareil, veuillez lire attentivement ce manuel et le conserver pour pouvoir vous y reporter ultérieurement.

LED TV
32LN340HBUA

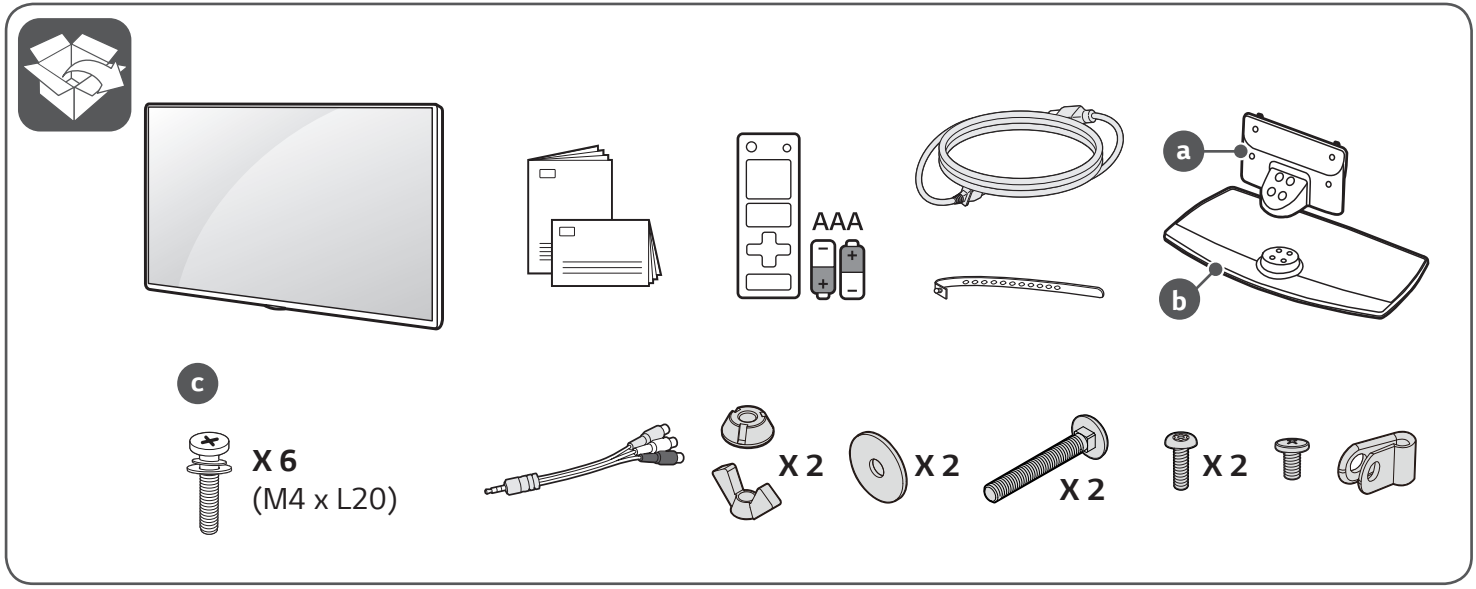

www.lg.com

Depending upon model / Según el modelo / Selon le modèle

Printed in Korea / Imprimé en Corée

ENGLISH Read **Safety and Reference**.
WARNING : To prevent injury, this apparatus must be securely attached to the desk/wall in accordance with the **Safety and Reference**.

ESPAÑOL Leer **Seguridad y Consultas**.
ADVERTENCIA : Para prevenir daños, este aparato debe ser instalado a la mesa/pared de acuerdo a la guía de **Seguridad y Consultas**.

FRANÇAIS Lisez **Sécurité et références**.
AVERTISSEMENT : Pour éviter les blessures, cet appareil doit être solidement fixé au bureau ou au mur, conformément aux directives du manuel **Sécurité et références**.

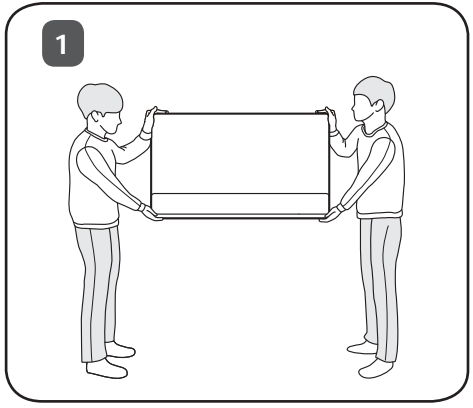

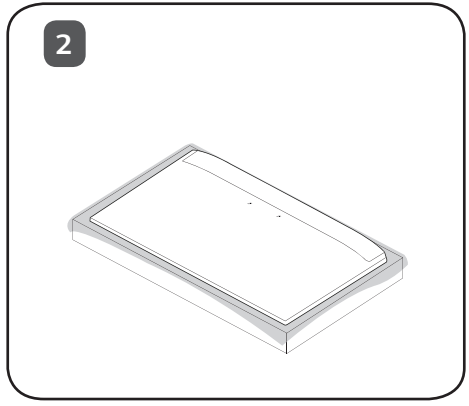

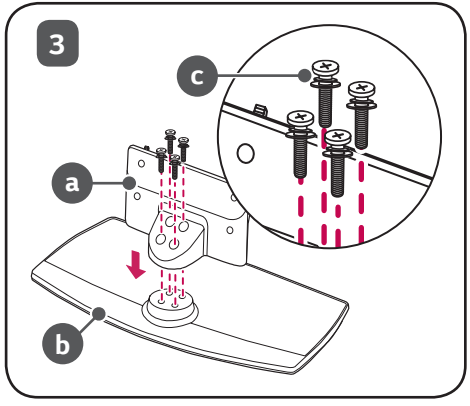

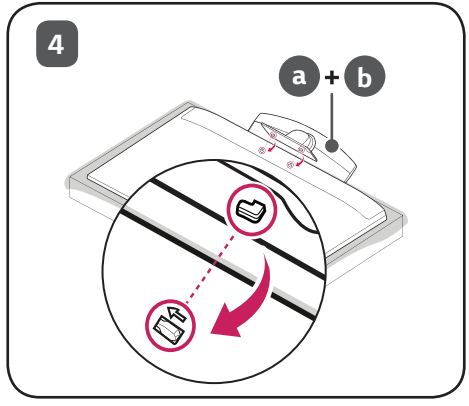

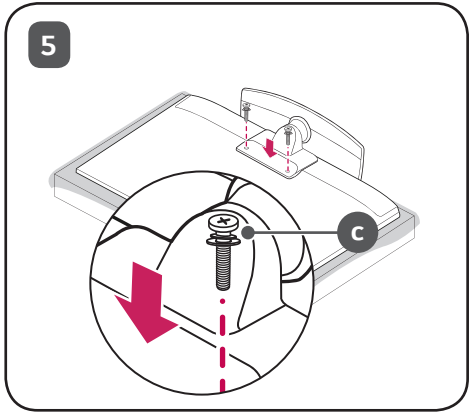
5
C

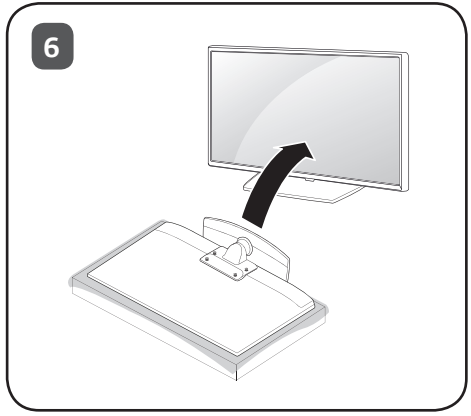
6

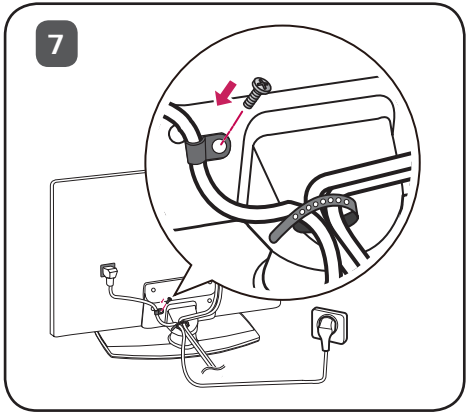
7

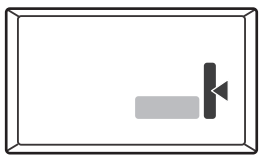

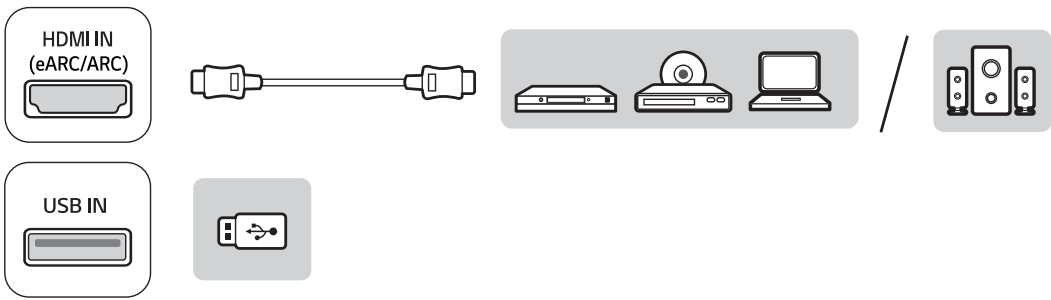
HDMI IN
(eARC/ARC)
USB IN

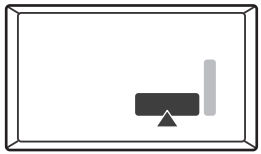

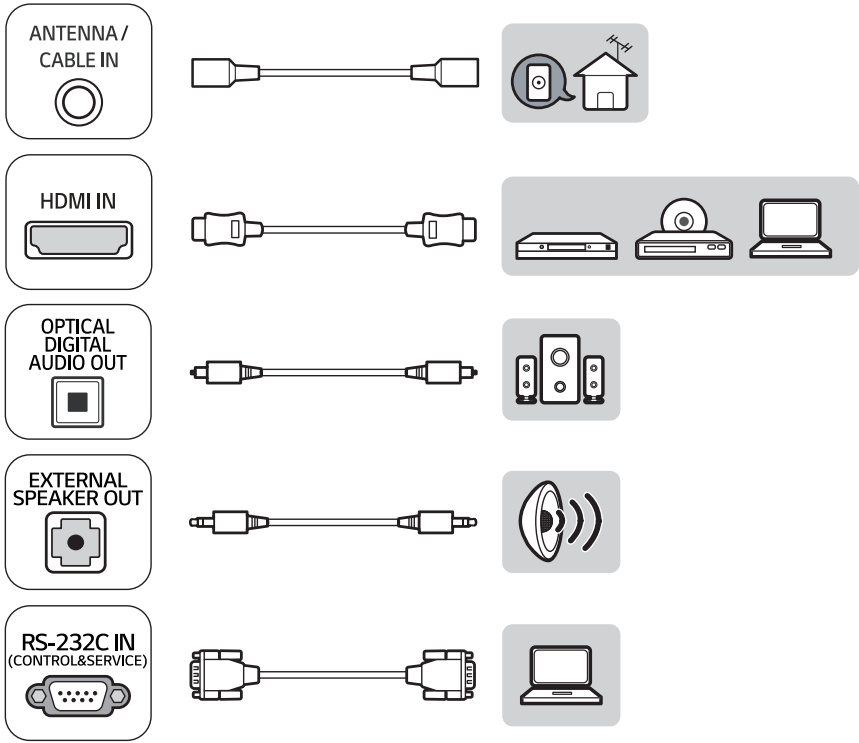
ANTENNA / CABLE IN
HDMI IN
OPTICAL DIGITAL AUDIO OUT
EXTERNAL SPEAKER OUT
RS-232C IN
(CONTROL&SERVICE)

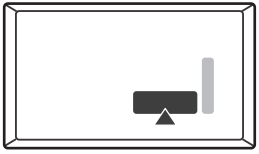

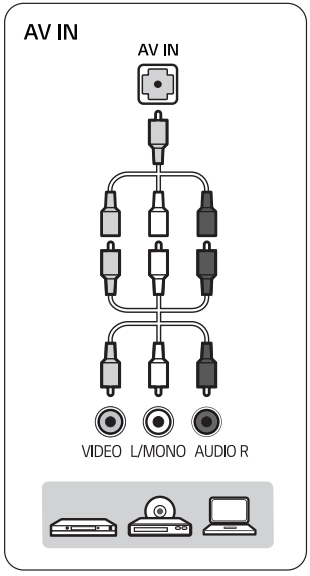
AV IN
AV IN
VIDEO
L/MONO
AUDIO R

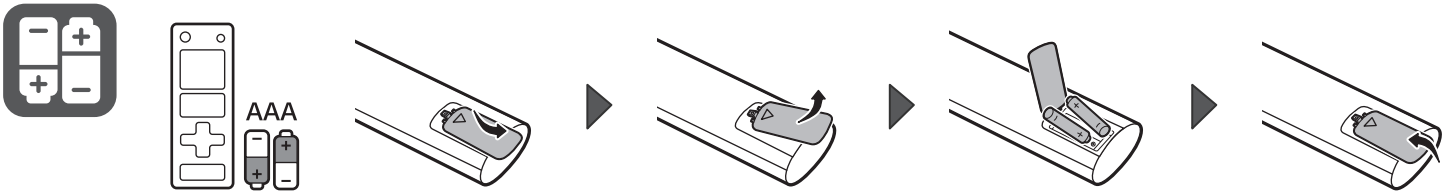
AAA

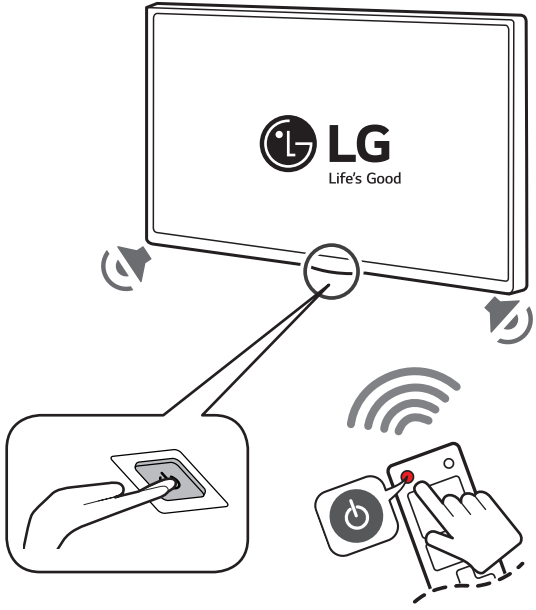
LG
Life's Good

MFL71978902
(2211-REV00)

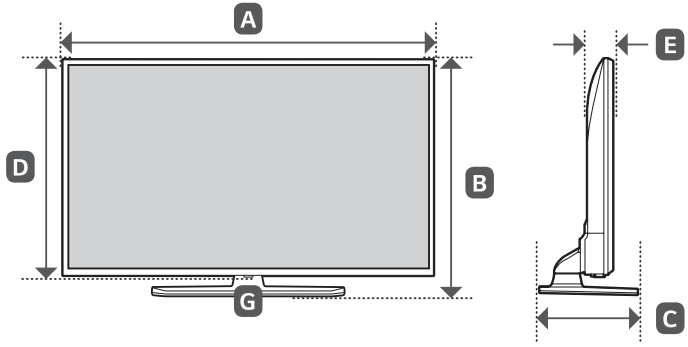

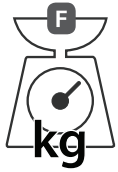

(lbs / libras / lb)

MODELS / MODELOS / MODÈLES	A		B		C		D		E		F		F – G		Power consumption / Consumo de potencia / Consommation électrique
	mm (inches / pulgadas / po)										kg (lbs / libras / lb)				
32LN340HBUA	739 (29.0)	739 (29,0)	495 (19.4)	495 (19,4)	241 (9.4)	241 (9,4)	441 (17.3)	441 (17,3)	84 (3.3)	84 (3,3)	6.05 (13.3)	6,05 (13,3)	4.85 (10.6)	4,85 (10,6)	45 W
Power requirement / Alimentación requerida / Alimentation électrique											AC 120 V ~ 50 / 60 Hz				

OWNER'S MANUAL

Safety and Reference

LED TV*

* LG LED TV applies LCD screen with LED backlights.

Please read this manual carefully before operating your set and retain it for future reference.

32LN340CBUD
32LN340HBUA
32LN560HBUA
32LN570HBUA

MFL71957802
(2211-REV00)

www.lg.com

Copyright © 2022 LG Electronics Inc. All Rights Reserved.

Printed in Korea

TABLE OF CONTENTS

ENGLISH

Important Safety Instruction

Warning! Safety instructions

Preparing

Optional Extras

8 Wall Mounting Bracket

Lifting and Moving the TV

Mounting on a Table

10 Using the Kensington Security System (optional)
10 Attaching the TV to a desk

Securing TV to the Wall

Mounting on a Wall

Connections

13 Antenna/Cable
13 Other connections
15 Network setup

Using the Button

Adjusting the Angle of the TV to suit view

Using Remote Control

Troubleshooting

Settings (Type A)

21 Selecting Picture Mode
21 Adjusting the Brightness of a Picture
21 To use Energy Saving Feature

Settings (Type B)

22 Selecting Picture Mode
22 Adjusting the Brightness of a Picture
22 To use Energy Saving Feature

Specifications

24 HDMI (PC) supported mode
24 HDMI (DTV) supported mode
24 Supported External Subtitles
24 Supported Photo Formats
25 Supported Audio Formats
25 Supported Video Formats

Key Codes (TYPE A)

Key Codes (TYPE B)

External Control Device Setup

28 RS-232C Setup
28 Phone jack Type
28 Type of Connector: D-Sub 9-Pin Male
29 RS-232C Configurations
29 Communication Parameters
29 Set ID
30 Command Reference List
31 Transmission / Receiving Protocol

IR OUT Using Guide

39 Suitable / Not Recommend remote-controller data format
39 IR Receiver specifications

Open Source Software Notice Information

Software Download Information

Updating Firmware

Licenses

Regulatory

41 FCC Notice
41 FCC Radio Frequency Interference Requirements (for UNII devices)
41 FCC RF Radiation Exposure Statement
42 Industry Canada Statement
42 IC Radiation Exposure Statement
42 RSS-247 Requirement
43 NOTE TO CABLE/TV INSTALLER
43 WARNING! (STABILITY HAZARD)
43 Symbols
43 LG Take-back & Recycling Policy

Important Safety Instruction

ENGLISH

- Read these instructions.
- Keep these instructions.
- Heed all warnings.
- Follow all instructions.
- Do not use this apparatus near water.
- Clean only with dry cloth.
- Do not block any ventilation openings. Install in accordance with the manufacturer's instructions.
- Do not install near any heat sources such as radiators, heat registers, stoves, or other apparatus (including amplifiers) that produce heat.
- Do not defeat the safety purpose of the polarized or grounding-type plug. A polarized plug has two blades with one wider than the other. A grounding type plug has two blades and a third grounding prong. The wide blade or the third prong are provided for your safety. If the provided plug does not fit into your outlet, consult an electrician for replacement of the obsolete outlet.
- Protect the power cord from being walked on or pinched particularly at plugs, convenience receptacles, and the point where they exit from the apparatus.
- Only use attachments/accessories specified by the manufacturer.
- Use only with the cart, stand, tripod, bracket, or table specified by the manufacturer, or sold with the apparatus. When a cart is used, use caution when moving the cart/apparatus combination to avoid injury from tip-over.

- Unplug this apparatus during lightning storms or when unused for long periods of time.
- Refer all servicing to qualified service personnel. Servicing is required when the apparatus has been damaged in any way, such as power-supply cord or plug is damaged, liquid has been spilled or objects have fallen into the apparatus, the apparatus has been exposed to rain or moisture, does not operate normally, or has been dropped.

Warning! Safety instructions

CAUTION

RISK OF ELECTRIC SHOCK
DO NOT OPEN

CAUTION: TO REDUCE THE RISK OF ELECTRIC SHOCK DO NOT REMOVE COVER (OR BACK). NO USER SERVICEABLE PARTS INSIDE. REFER TO QUALIFIED SERVICE PERSONNEL.

The symbol is intended to alert the user to the presence of uninsulated dangerous voltage within the product's enclosure that may be of sufficient magnitude to constitute a risk of electric shock to persons.

The symbol is intended to alert the user to the presence of important operating and maintenance (servicing) instructions in the literature accompanying the device.

WARNING: TO REDUCE THE RISK OF FIRE AND ELECTRIC SHOCK, DO NOT EXPOSE THIS PRODUCT TO RAIN OR MOISTURE.

- TO PREVENT THE SPREAD OF FIRE, KEEP CANDLES OR OTHER ITEMS WITH OPEN FLAMES AWAY FROM THIS PRODUCT AT ALL TIMES.
- **Do not place the TV and/or remote control in the following environments:**
  - Keep the product away from direct sunlight.
  - An area with high humidity such as a bathroom
  - Near any heat source such as stoves and other devices that produce heat.
  - Near kitchen counters or humidifiers where they can easily be exposed to steam or oil.
  - An area exposed to rain or wind.
  - Do not expose to dripping or splashing and do not place objects filled with liquids, such as vases, cups, etc. on or over the apparatus (e.g., on shelves above the unit).
  - Near flammable objects such as gasoline or candles, or expose the TV to direct air conditioning.
  - Do not install in excessively dusty places.

  Otherwise, this may result in fire, electric shock, combustion/ explosion, malfunction or product deformation.
- **Ventilation**
  - Install your TV where there is proper ventilation. Do not install in a confined space such as a bookcase.
  - Do not install the product on a carpet or cushion.
  - Do not block or cover the product with cloth or other materials while unit is plugged in.
- Take care not to touch the ventilation openings. When watching the TV for a long period, the ventilation openings may become hot.
- Protect the power cord from physical or mechanical abuse, such as being twisted, kinked, pinched, closed in a door, or walked upon. Pay particular attention to plugs, wall outlets, and the point where the cord exits the device.
- Do not move the TV whilst the Power cord is plugged in.
- Do not use a damaged or loosely fitting power cord.
- Be sure to grasp the plug when unplugging the power cord. Do not pull on the power cord to unplug the TV.
- Do not connect too many devices to the same AC power outlet as this could result in fire or electric shock.

- **Disconnecting the Device from the Main Power**
  - The power plug is the disconnecting device. In case of an emergency, the power plug must remain readily accessible.
- Do not let your children climb or cling onto the TV. Otherwise, the TV may fall over, which may cause serious injury.
- **Outdoor Antenna Grounding** (Can differ by country):
  - If an outdoor antenna is installed, follow the precautions below. An outdoor antenna system should not be located in the vicinity of overhead power lines or other electric light or power circuits, or where it can come in contact with such power lines or circuits as death or serious injury can occur. Be sure the antenna system is grounded to provide some protection against voltage surges and built-up static charges Section 810 of the National Electrical Code (NEC) in the U.S.A. provides information with respect to proper grounding of the mast and supporting structure, grounding of the lead-in wire to an antenna discharge unit, size of grounding conductors, location of antenna discharge unit, connection to grounding electrodes and requirements for the grounding electrode. Antenna grounding according to the National Electrical Code, ANSI/NFPA 70
- **Grounding** (Except for devices which are not grounded.)
  - TV with a three-prong grounded AC plug must be connected to a three-prong grounded AC outlet. Ensure that you connect the earth ground wire to prevent possible electric shock.
- Never touch this apparatus or antenna during a lightning storm. You may be electrocuted.
- Make sure the power cord is connected securely to the TV and wall socket if not secured damage to the Plug and socket may occur and in extreme cases a fire may break out.
- Do not insert metallic or inflammable objects into the product. If a foreign object is dropped into the product, unplug the power cord and contact the customer service.
- Do not touch the end of the power cord while it is plugged in. You may be electrocuted.
- **If any of the following occur, unplug the product immediately and contact your local customer service.**
  - The product has been damaged.
  - If water or another substance enters the product (like an AC adapter, power cord, or TV).
  - If you smell smoke or other odors coming from the TV.
  - When lightning storms or when unused for long periods of time.

  Even the TV is turned off by remote control or button, AC power source is connected to the unit if not unplugged in.
- Do not use high voltage electrical equipment near the TV (e.g., a bug zapper). This may result in product malfunction.
- Do not attempt to modify this product in any way without written authorization from LG Electronics. Accidental fire or electric shock can occur. Contact your local customer service for service or repair. Unauthorized modification could void the user's authority to operate this product.
- Use only an authorized attachments / accessories approved by LG Electronics. Otherwise, this may result in fire, electric shock, malfunction, or product damage.
- Never disassemble the AC adapter or power cord. This may result in fire or electric shock.
- Handle the adapter carefully to avoid dropping or striking it. An impact could damage the adapter.

- To reduce the risk of fire or electrical shock, do not touch the TV with wet hands. If the power cord prongs are wet or covered with dust, dry the power plug completely or wipe dust off.
- **Batteries**
  - Store the accessories (battery, etc.) in a safe location out of the reach of children.
  - Do not short circuit, disassemble, or allow the batteries to overheat. Do not dispose of batteries in a fire. Batteries should not be exposed to excessive heat.
  - Caution: Risk of fire or explosion if the battery is replaced by an incorrect type.
- **Moving**
  - When moving, make sure the product is turned off, unplugged, and all cables have been removed. It may take 2 or more people to carry larger TVs. Do not press or put stress on the front panel of the TV. Otherwise, this may result in product damage, fire hazard or injury.
- Keep the packing anti-moisture material or vinyl packing out of the reach of children.
- Do not allow an impact shock, any objects to fall into the product, and do not drop anything onto the screen.
- Do not press strongly upon the panel with a hand or a sharp object such as a nail, pencil, or pen, or make a scratch on it. It may cause damage to screen.
- **Cleaning**
  - When cleaning, unplug the power cord and wipe gently with a soft/dry cloth. Do not spray water or other liquids directly on the TV. Do not clean your TV with chemicals including glass cleaner, any type of air freshener, insecticide, lubricants, wax (car, industrial), abrasive, thinner, benzene, alcohol etc., which can damage the product and/or its panel. Otherwise, this may result in electric shock or product damage.

Preparing

- When the TV is turned on for the first time after being shipped from the factory, initialization of the TV may take approximately one minute.
- Image shown may differ from your TV.
- Your TV's OSD (On Screen Display) may differ slightly from that shown in this manual.
- The available menus and options may differ from the input source or product model that you are using.
- New features may be added to this TV in the future.
- The device must be easily accessed to a location outlet near the access. Some devices are not made by turning on / off button, turning off the device and unplugging the power cord.
- The items supplied with your product may vary depending upon the model.
- Product specifications or contents of this manual may be changed without prior notice due to upgrade of product functions.
- For an optimal connection, HDMI cables and USB devices should have bezels less than 10 mm (0.39 inches) thick and 18 mm (0.7 inches) width.
- Use an extension cable that supports USB 2.0 if the USB cable or USB flash drive does not fit into your TV's USB port.
- Use a certified cable with the HDMI logo attached. If you do not use a certified HDMI cable, the screen may not display or a connection error may occur.
- Recommended HDMI cable types
  - High Speed HDMI®/™ cable

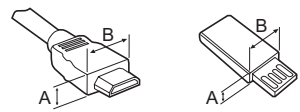

* A ≦ 10 mm (0.39 inches)

* B ≦ 18 mm (0.7 inches)

- Do not use any unapproved items to ensure the safety and lifespan of the product.
- Any damages or injuries by using unapproved items are not covered by the warranty.

Optional Extras

Optional extras can be changed or modified for quality improvement without any notification. Contact your dealer for buying these items.

These devices work only with certain models.

The model name or design may be changed due to the manufacturer's circumstances or policies.

(Depending upon model)

Wall Mounting Bracket

Make sure to use screws and wall mounts that meet the VESA standard. Standard dimensions for the wall mount kits are described in the following table.

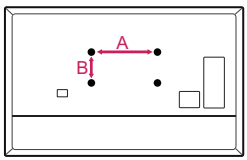

Model	32LN340CBUD 32LN340HBUA 32LN560HBUA 32LN570HBUA
VESA (A x B)	200 x 200
Standard screw	M6
Number of screws	4
Wall mount bracket(optional)	LSW240B MSW240

Lifting and Moving the TV

When moving or lifting the TV, read the following to prevent the TV from being scratched or damaged and for safe transportation regardless of its type and size.

- It is recommended to move the TV in the box or packing material that the TV originally came in.
- Before moving or lifting the TV, disconnect the power cord and all cables.
- When holding the TV, the screen should face away from you to avoid damage.

- Hold the top and bottom of the TV frame firmly. Make sure not to hold the transparent part, speaker, or speaker grille area.

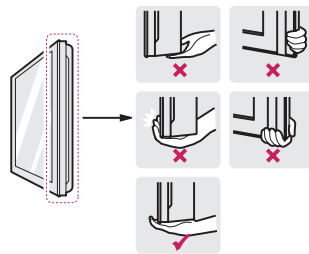

- Use at least two people to move a large TV.
- When transporting the TV by hand, hold the TV as shown in the following illustration.

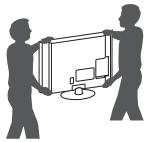

- When transporting the TV, do not expose the TV to jolts or excessive vibration.
- When transporting the TV, keep the TV upright; never turn the TV on its side or tilt towards the left or right.
- When handling the TV, be careful not to damage the protruding buttons.

- Avoid touching the screen at all times, as this may result in damage to the screen.
- Do not place the product on the floor with its front facing down without padding. Failure to do so may result in damage to the screen.
- Do not move the TV by holding the cable holders, as the cable holders may break, and injuries and damage to the TV may occur. (Depending upon model)
- When attaching the stand to the TV set, place the screen facing down on a cushioned table or flat surface to protect the screen from scratches.

Mounting on a Table

1 Lift and tilt the TV into its upright position on a table.

- Leave a 10 cm (4 inches) (minimum) space from the wall for proper ventilation.

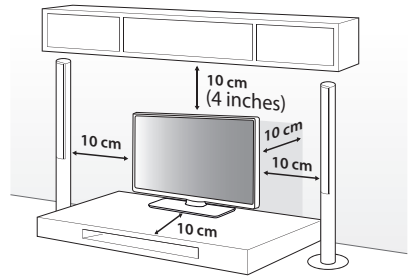

(Depending upon model)

2 Connect the power cord to a wall outlet.

- Do not apply foreign substances (oils, lubricants, etc.) to the screw parts when assembling the product. (Doing so may damage the product.)
- If you install the TV on a stand, you need to take actions to prevent the product from overturning. Otherwise, the product may fall over, which may cause injury.
- Do not use any unapproved items to ensure the safety and product life span.
- Any damage or injuries caused by using unapproved items are not covered by the warranty.
- Make sure that the screws are fastened tightly. (If they are not fastened securely enough, the TV may tilt forward after being installed.)
- Do not fasten the screws with excessive force otherwise they may be worn out and become loose.

Using the Kensington Security System (optional)

(Depending upon model)

The Kensington security system connector is located at the rear of the TV. For more information of installation and using, refer to the manual provided with the Kensington security system or visit *http://www.kensington.com*. Connect the Kensington security system cable between the TV and a table.

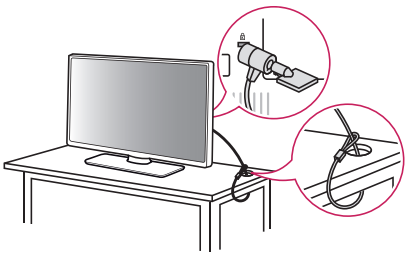

- The Kensington security system is optional. You can obtain additional accessories from your local dealer.

Attaching the TV to a desk

(Depending upon model)

If mounting the TV on a table, make sure it is installed according to the method outlined in 'Attaching the TV to a desk'.

The TV should be attached to a desk so it cannot be pulled in a forward/backward direction, potentially causing injury or damaging the product.

(TYPE A)

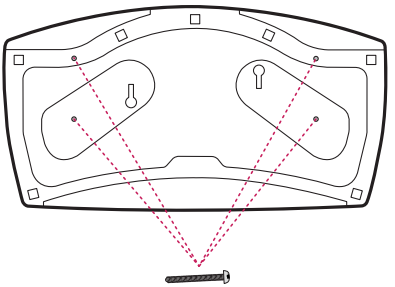

4-Screws

(Not provided as parts of the product.)

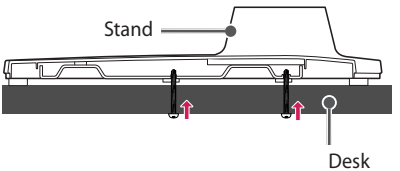

Screw: M5 x L (*L: Table depth + 8~10 mm)

ex) Table depth: 15 mm,

Screw: M5 x L25

(TYPE B)

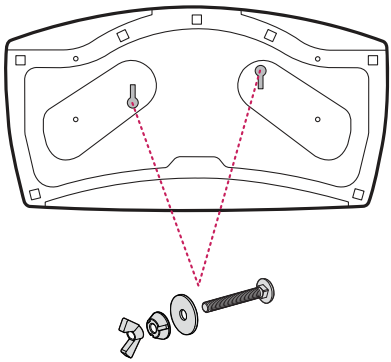

2-Screws for Stand Fixing,
2-Washers for Stand Fixing,
2-Nuts for Stand Fixing
(Provided as parts of the product.)

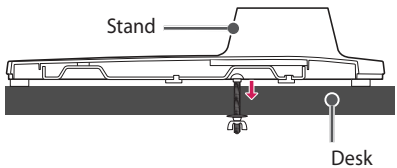

Securing TV to the Wall

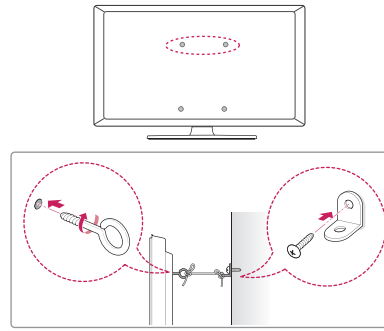

(Depending upon model)

1 Insert and tighten the eye-bolts or TV brackets and bolts on the back of the TV.
- If there are bolts inserted at the eye-bolts position, remove the bolts first.

2 Mount the wall brackets with the bolts to the wall. Match the location of the wall bracket and the eye-bolts on the rear of the TV.

3 Connect the eye-bolts and wall brackets tightly with a sturdy rope or cable. Make sure to keep the rope parallel to the flat surface.

- Use a platform or cabinet that is strong and large enough to support the TV securely.
- Brackets, bolts, and ropes are optional. You can obtain additional accessories from your local dealer.

Mounting on a Wall

An optional wall mount can be used with your LG Television. Consult with your local dealer for a wall mount that supports the VESA standard used by your TV model. Carefully attach the wall mount bracket at the rear of the TV. Install the wall mount bracket on a solid wall perpendicular to the floor. If you are attaching the TV to other building materials, please contact qualified personnel to install the wall mount. Detailed instructions will be included with the wall mount. We recommend that you use an LG brand wall mount. The LG wall mount is easy to adjust or to connect the cables. When you do not use LG's wall mount bracket, use a wall mount bracket where the device is adequately secured to the wall with enough space to allow connectivity to external devices. If you are using a non-adjustable mount, attach the mount to the wall. Attach the cables to the TV first, then attach the TV to the mount.

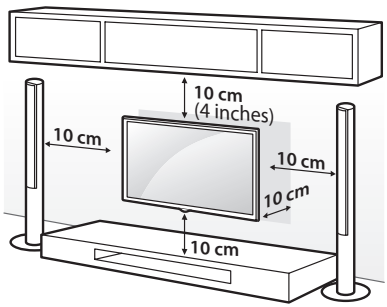

(Depending upon model)

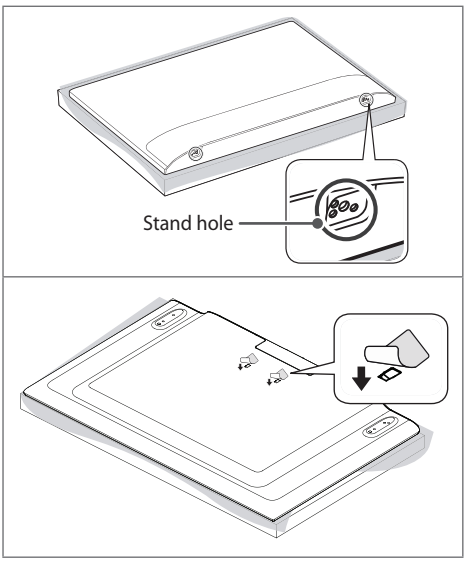

- Remove the stand before installing the TV on a wall mount by performing the stand attachment in reverse.
- For more information of screws and wall mount bracket, refer to the Separate purchase.
- If you intend to mount the product to a wall, attach VESA standard mounting interface (optional parts) to the back of the product. When you install the set to use the wall mounting bracket (optional parts), fix it carefully so as not to drop.
- When mounting a TV on the wall, make sure not to install the TV by hanging the power and signal cables on the back of the TV.
- Do not install this product on a wall if it could be exposed to oil or oil mist. This may damage the product and cause it to fall.

- When installing the wall mounting bracket, it is recommended to cover the stand hole using tape, in order to prevent the influx of dust and insects. (Depending upon model)

Connections

You can connect various external devices to the TV. For more information on external device's connection, refer to the manual provided with each device.

Antenna/Cable

Connect an antenna, cable, or cable box to watch TV while referring to the following. The illustrations may differ from the actual items and an RF cable is optional.

- Make sure not to bend the copper wire of the RF cable.

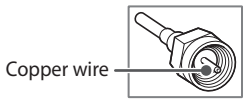

- Complete all connections between devices, and then connect the power cord to the power outlet to prevent damage to your TV.
- To improve the picture quality in a poor signal area, purchase a signal amplifier.
- Use a signal splitter to use 2 TVs or more.
- If the antenna is not installed properly, contact your dealer for assistance.

Other connections

Connect your TV to external devices. For the best picture and audio quality, connect the external device and the TV with the HDMI cable.

HDMI

- Supported HDMI Audio format:
  (Depending upon model)
  Dolby Digital / Dolby Digital Plus (32 kHz / 44.1 kHz / 48 kHz),
  PCM (32 kHz / 44.1 kHz / 48 kHz / 96 kHz / 192 kHz)

- If the device connected to Input Port also supports HDMI Deep Color, your picture may be clearer. However, if the device doesn't support it, it may not work properly. In that case, change the TV's [HDMI Deep Color] setting to off. (Depending upon model)
- ⚙ ► ⋮ ► [General] ► [Devices] ► [HDMI Settings] ► [HDMI Deep Color] (Depending upon model)

USB

- Some USB Hubs may not work. If a USB device connected through a USB Hub is not detected, connect it directly to the USB port on the TV.
- Use USB 1 port when connecting a webcam. USB 2 port may not support some webcam. (Depending upon model)
- It is recommended that you use a USB hub or USB HDD with a power supply. (If the power supplied is not sufficient, the USB storage device may not be detected properly.)
- It is recommended that you use an external USB HDD with a rated voltage of 5 V of less and a rated current of 500 mA or less.

External Speakers

(Depending upon model)

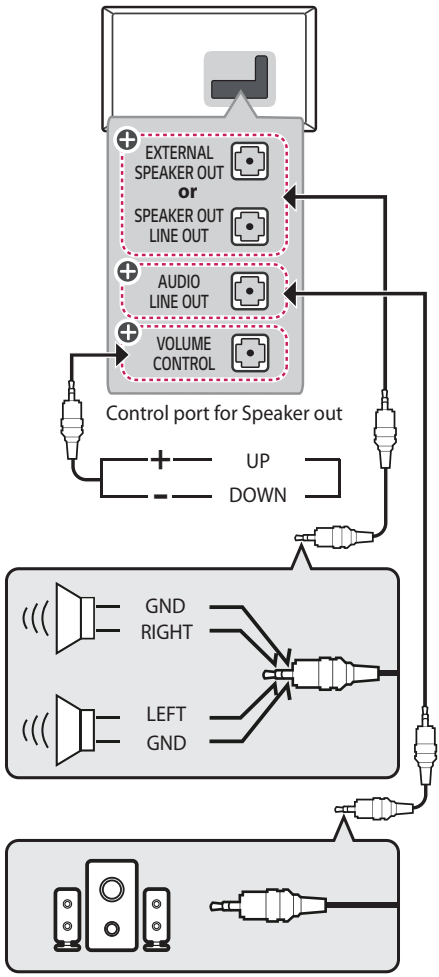

⊕: Depending upon model

- Use only with the 3 pole 3.5 mm stereo jack.
- Do not connect your headphones or earphones to the port for connecting an external speaker.

Method of volume control port

(Depending upon model)

- Cable Spec.

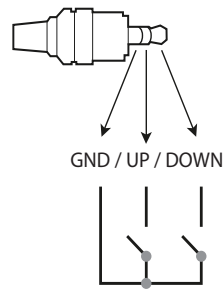	Each up/down pins are connected to CPU with pull up resistor respectively.
	CPU detects transition from 3.3 V to GND level for volume control.

External Devices

Supported external devices are: Blu-ray player, HD receivers, DVD players, VCRs, audio systems, USB storage devices, PC, gaming devices, and other external devices.

- The external device connections shown may differ slightly from illustrations in a manual.
- Connect external devices to the TV regardless about the order of the TV port.
- If you connect a gaming device to the TV, use the cable supplied with the gaming device.
- In PC mode, there may be noise associated with the resolution, vertical pattern, contrast or brightness. If noise is present, change the PC output to another resolution, change the refresh rate to another rate or adjust the brightness and contrast on the [Picture] menu until the picture is clear. Depending upon the graphics card, some resolution settings may not allow the image to be positioned on the screen properly.
- Refer to the external equipment's manual for operating instructions.

Network setup

(Depending upon model)

Wired network connection

This TV can be connected to a Pro:Centric server via the **LAN** port. After making the physical connection, the TV needs to be set up for network communication.

Connect the **LAN** port of the Modem or Router from Pro:Centric server to the **LAN** port on the TV.

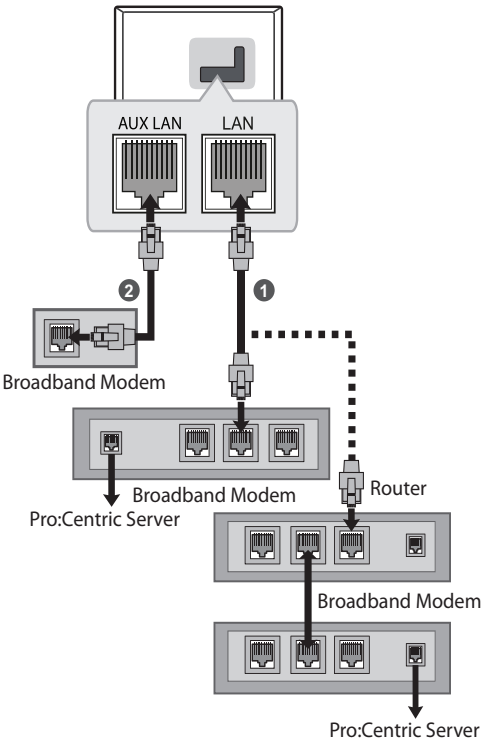

1 Connect the **LAN** port of the Modem or Router to the **LAN** port on the TV.

2 Connect the **LAN** port of the PC to the **AUX LAN** port on the TV. (Depending upon model)

- Do not connect a modular phone cable to the **LAN** port.
- Since there are various connection methods, please follow the specifications of your telecommunication carrier or internet service provider.

Using the Button

You can simply operate the TV functions, using the button.

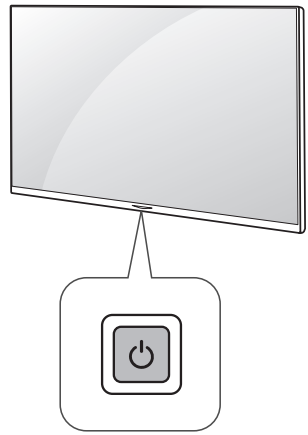

Basic Functions

* For series of 32LN340C, 32LN340H

	Power On (Press) Power Off [1] (Press and Hold) Menu control (Press [2]) Menu selection (Press and Hold [3])

1 All running apps will close.

2 You can access and adjust the menu by pressing the button when TV is on.

3 You can use the function when you access menu control.

* For series of 32LN560H, 32LN570H

	Power On (Press) Power Off [1] (Press)

1 All running apps will close.

Adjusting the Menu

(Depending upon model)

When the TV is turned on, press the ⏻ button one time. You can adjust the Menu items using the button.

⏻	Turns the power off.
	Changes the input source.
∧ ∨	Scrolls through the saved channels.
+ −	Adjusts the volume level.

Adjusting the Angle of the TV to suit view

Swivel 20 degrees to the left or right and adjust the angle of the TV to suit your view.

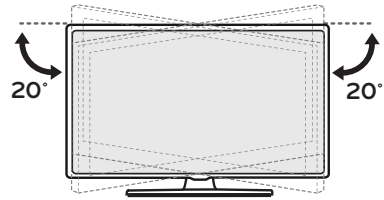

(Depending upon model)

- When adjusting the angle of the product, watch out for your fingers.
  - Personal injury may occur if hands or fingers are pinched. If the product is tilted too much, it may fall, causing damage or injury.

Using Remote Control

The descriptions in this manual are based on the buttons on the remote control. Please read this manual carefully and use the TV correctly.

To install batteries, open the battery cover, replace batteries (1.5 V AAA) matching the ⊕ and ⊖ ends to the label inside the compartment, and close the battery cover.

To remove the batteries, perform the installation actions in reverse. This remote uses infrared light. When in use, it should be pointed in the direction of the TV's remote sensor.

(TYPE A)

(For series of LN340C, LN340H)

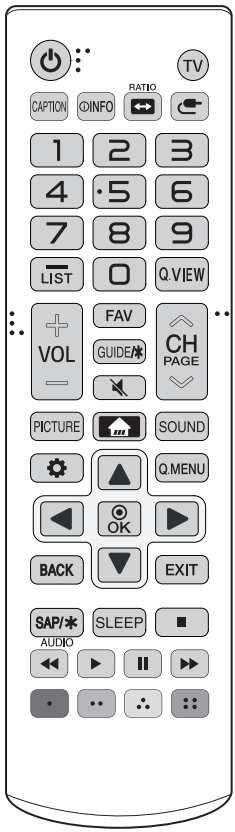

(Some buttons and services may not be provided depending upon models or regions.)

* To use the button, press and hold for more than 3 seconds.

(Power) Turns the TV on or off.

TV Returns to the last TV channel.

CAPTION Activates or deactivates the subtitles.

INFO Shows information on the current program.

RATIO Resizes an image.

(Input) Changes the input source.

Number button Enters numbers.

(Dash) Inserts a dash between numbers such as 2-1 and 2-2.

LIST Accesses the saved channel list.

Q.VIEW Alternates between the two last channels selected (pressing repeatedly).

+ VOL − Adjusts the volume level.

FAV Accesses your favorite channel list.

GUIDE/ Displays the program event according to time scheduler.

(Mute) Mutes all sounds.

(Mute) * Pressing and holding the button accesses the [Accessibility] menu.

CH Scrolls through the saved channels.

PAGE Moves to the previous or next screen.

PICTURE Changes the picture mode.

(Home) Accesses the Home menu.

SOUND Changes the sound mode.

(Settings) Accesses the setting menu.

Q.MENU Accesses the quick menu.

Navigation button (up / down / left / right) Scrolls through menus or options.

OK Selects menus or options and confirms your input.

BACK Returns to the previous screen.

EXIT Clears all on-screen displays and returns to TV viewing.

SAP/ Enables SAP (Secondary Audio Program) Feature.

AUDIO Digital signal: Changes the audio language.
Analog signal: Changes the MTS sound.

SLEEP Sets the length of time until the TV to turns off.

, , , , Control buttons for media contents

, , , These access special functions in some menus.

(TYPE B)

(For series of LN560H, LN570H)

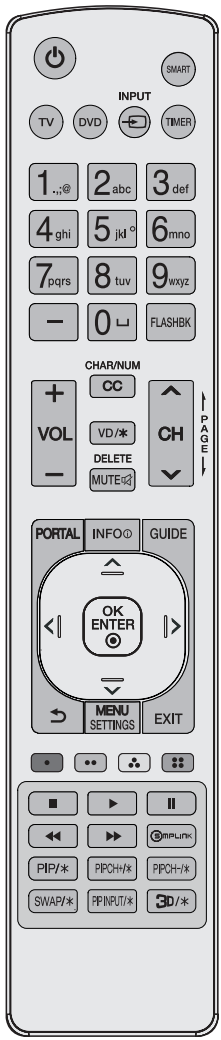

(Some buttons and services may not be provided depending upon models or regions.)

(Power) Turns the TV on or off.

SMART Accesses the Smart menu.

TV Selects the remote's operating mode: TV.

DVD Selects the remote's operating mode: DVD.

INPUT Changes the input source.

TIMER Turns the TV off in a set amount of time.

Number button Enters numbers.

— (Dash) Inserts a dash between numbers such as 2-1 and 2-2.

(Space) Not functional.

FLASHBK Tunes to the last channel or input viewed.

+ VOL — Adjusts the volume level.

CHAR/NUM Not functional.

CC Selects a closed caption.

VD/* Enables VD function. SAP (Secondary Audio Program) feature can also be enabled by pressing the **VD** key.

DELETE Not functional.

MUTE Mutes all sounds.

CH Scrolls through the saved channels.

PAGE Moves to the previous or next screen.

PORTAL Displays and removes Pro:Centric Application.

INFO Shows the information of the current program.

GUIDE Displays and removes the electronic program guide of Pro:Centric Application.

Navigation button (up / down / left / right) Scrolls through menus or options.

OK ENTER ⊙ Selects menus or options and confirms your input.

(Back) Returns to the previous screen.

MENU SETTINGS Accesses the quick settings.

EXIT Clears all on-screen displays and returns to TV viewing.

These access special functions in some menus.

■, ◀◀, ▶, ❚❚, ▶▶ Control buttons for media contents

SIMPLINK Feature can only be enabled or disabled by installer menu settings. Configuration of this feature is not supported on TV remote control.

PIP/✳,PIPCH+/✳,PIPCH-/✳,SWAP/✳,PIP INPUT/✳ Not functional.

3D/✳ Used for viewing 3D video. (For 3D models)

- Do not mix new batteries with old batteries. This may cause the batteries to overheat and leak.
- Failure to match the correct polarities of the battery may cause the battery to burst or leak, resulting in fire, personal injury, or ambient pollution.
- This apparatus uses batteries. In your community there might be regulations that require you to dispose of these batteries properly due to environmental considerations. Please contact your local authorities for disposal or recycling information.
- Batteries inside or inside the product shall not be exposed to excessive heat such as sunshine, fire or the like.

Troubleshooting

The software may be updated for improvement in performance. The customer is responsible to ensure the compatibility of their equipment with any LG Electronics software. If needed, please consult with LG Electronics and update new software versions according to the guidance provided by LG Electronics.

- Cannot control the TV with the remote control.
  - Check if anything such as tape has been placed over the receiver.
  - Check if there is any obstacle between the product and the remote control.
  - Replace the batteries with new fresh ones.
- No image display and no sound is produced.
  - Check if the product is turned on.
  - Check if the power cord is connected to a wall outlet.
  - Check if there is a problem in the wall outlet by connecting other products.
- The TV turns off suddenly.
  - Check the power control settings. The power supply may be interrupted.
  - Check if the auto-off function is activated on the settings related time.
  - If there is no signal while the TV is on, the TV will turn off automatically after 15 minutes of inactivity.
- When connecting to the PC (HDMI), no signal is detected.
  - Turn the TV off/on using the remote control.
  - Reconnect the HDMI cable.
  - Restart the PC with the TV on.

- **Abnormal Display**
  - If the TV feels cold to the touch, there may be a small flicker when it is turned on. This is normal; there is nothing wrong with TV. Some minute dot defects may be visible on the screen, appearing as tiny red, green, or blue spots. However, they have no adverse effect on the TV's performance. Avoid touching the LCD screen or holding your finger(s) against it for long periods of time. Doing so may produce some temporary distortion effects on the screen.
  - This panel is an advanced product that contains millions of pixels. In a very few cases, you could see fine dots on the screen while you're viewing the TV. Those dots are deactivated pixels and do not affect the performance and reliability of the TV.
  - Displaying a still image for a prolonged period of time may cause an image sticking. Avoid displaying a fixed image on the TV screen for a extended length of time.
- **Generated Sound**
  - **Cracking noise** A cracking noise that occurs when watching or turning off the TV is generated by plastic thermal contraction due to temperature and humidity. This noise is common for products where thermal deformation is required.
  - **Electrical circuit humming/panel buzzing** A low level noise is generated from a high-speed switching circuit, which supplies a large amount of current to operate a product. It varies depending upon the product. This generated sound does not affect the performance and reliability of the product.

- When cleaning the product, be careful not to allow any liquid or foreign objects to enter the gap between the upper, left or right side of the panel and the guide panel. (Depending upon model)

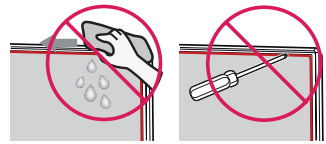

- Make sure to wring any excess water or cleaner from the cloth.
- Do not spray water or cleaner directly onto the TV screen.
- Make sure to spray just enough of water or cleaner onto a dry cloth to wipe the screen.

Settings (Type A)

- For series of LN340C, LN340H
  (Depending upon model)

Selecting Picture Mode

⚙ (Settings) ► ⋮ ► [Picture] ► [Select Mode]

Select the picture mode that is best suited to your viewing environment, preferences or video type.

- [Vivid] Sharpens the image by increasing the contrast, brightness and sharpness.
- [Standard] Displays the picture with normal contrast, brightness and sharpness levels.
- [APS] APS (Auto power saving) mode reduces power consumption by dimming control.
- [Cinema] Suitable picture for movies.
- [Sports] / [Soccer] Suitable picture for sports games. Sharpens the image of rapid movements such as kicking or throwing a ball.
- [FILMMAKER MODE] Provides optimized Cinema Picture quality certified by UHD Alliance, the standard setting body for UHD-related technologies.
- [Expert (Bright space, daytime)] / [Expert (Dark space, night)] Suitable for movies, etc. viewed in a dark environment. [Expert (Dark space, night)] has lower color temperature than [Expert (Bright space, daytime)]. Select a mode that is suitable for the movie you are watching.
- Depending upon input signal, the available range of picture modes may differ.
- [Expert] mode is for picture tuning professionals to control and fine-tune using a specific image. For normal images, the effects may not be drastic.
- [Select Mode] changes may modify [Energy Saving] and [Motion Eye Care] settings and it can affect energy consumption.

Adjusting the Brightness of a Picture

⚙ (Settings) ► ⋮ ► [Picture] ► [Advanced Settings] ► [Brightness]

Adjust the brightness of the entire screen.

- [Panel Brightness] Controls the level of screen brightness by adjusting the backlight.
- [Adjust Contrast] Adjusts the contrast of the bright and dark areas of the picture.
- [Black Level] Adjusts the brightness of dark areas of the screen.
- [Auto Dynamic Contrast] Corrects the difference between the bright and dark areas of the screen for optimal results depending upon the brightness of the picture.
- [Gamma(Adjust Brightness)] Adjusts the medium brightness of the picture.
- [Video Range] Adjusts the darkness of the screen in order to display a perfect black.
- [Motion Eye Care] Automatically adjusts brightness and reduces image blur based on image data which reduces eyestrain.
- Depending upon the input signal or the selected picture mode, the available options may differ.

To use Energy Saving Feature

⚙ (Settings) ► ⋮ ► [General] ► [Energy Saving]

Reduces power consumption by adjusting peak screen brightness.

- [No Signal Auto Off] Configure how the TV operates when there is no video signal for a certain period.
- [Energy Saving Step]
  - [Auto]: TV sensor detects the ambient lighting and automatically adjusts the screen brightness.
  - [Off]: Turns off the Energy Saving mode.
  - [Minimum] / [Medium] / [Maximum] Use the power saving feature according to [Energy Saving Step] set on TV.
- [Minimum Brightness] You can set how dark the screen is when the [Energy Saving Step] is set to [Auto]
- [Screen Off] Screen is turned off and only sound is played. Press any button except the power and the volume buttons to turn the screen back on.
- If you use [Energy Saving Step] function, brightness of your TV will be affected.

Settings (Type B)

- For series of LN560H, LN570H (Depending upon model)

Selecting Picture Mode

MENU SETTINGS ► (⋮) ► **[Picture]** ► **[Select Mode]**

Select the picture mode that is best suited to your viewing environment, preferences or video type.

- [Vivid] Sharpens the image by increasing the contrast, brightness and sharpness.
- [Standard] Displays the picture with normal contrast, brightness and sharpness levels.
- [APS] APS (Auto power saving) mode reduces power consumption by dimming control.
- [Cinema] Suitable picture for movies.
- [Sports] / [Soccer] Suitable picture for sports games. Sharpens the image of rapid movements such as kicking or throwing a ball.
- [FILMMAKER MODE] Provides optimized Cinema Picture quality certified by UHD Alliance, the standard setting body for UHD-related technologies.
- [Expert (Bright space, daytime)] / [Expert (Dark space, night)] Suitable for movies, etc. viewed in a dark environment. [Expert (Dark space, night)] has lower color temperature than [Expert (Bright space, daytime)]. Select a mode that is suitable for the movie you are watching.
- Depending upon input signal, the available range of picture modes may differ.
- [Expert] mode is for picture tuning professionals to control and fine-tune using a specific image. For normal images, the effects may not be drastic.
- [Select Mode] changes may modify [Energy Saving] and [Motion Eye Care] settings and it can affect energy consumption.

Adjusting the Brightness of a Picture

MENU SETTINGS ► (⋮) ► **[Picture]** ► **[Advanced Settings]** ► **[Brightness]**

Adjust the brightness of the entire screen.

- [Panel Brightness] Controls the level of screen brightness by adjusting the backlight.
- [Adjust Contrast] Adjusts the contrast of the bright and dark areas of the picture.
- [Black Level] Adjusts the brightness of dark areas of the screen.
- [Auto Dynamic Contrast] Corrects the difference between the bright and dark areas of the screen for optimal results depending upon the brightness of the picture.
- [Gamma(Adjust Brightness)] Adjusts the medium brightness of the picture.
- [Video Range] Adjusts the darkness of the screen in order to display a perfect black.
- [Motion Eye Care] Automatically adjusts brightness and reduces image blur based on image data which reduces eyestrain.
- Depending upon the input signal or the selected picture mode, the available options may differ.

To use Energy Saving Feature

MENU SETTINGS ► (⋮) ► **[General]** ► **[Energy Saving]**

Reduces power consumption by adjusting peak screen brightness.

- [No Signal Auto Off] Configure how the TV operates when there is no video signal for a certain period.
- [Minimum Brightness] You can set how dark the screen is when the [Energy Saving Step] is set to [Auto]
- If you use [Energy Saving Step] function, brightness of your TV will be affected.

Specifications

Product specifications may be changed without prior notice due to upgrade of product functions.

Estimated yearly energy consumption indicated on the FTC label is measured in accordance with the Test Procedures for Television Sets (USA only).

The actual energy consumption depends on the usage environment (The content watched, TV settings, etc.).

Broadcasting Specifications	
Television system	ATSC, NTSC-M, 64 & 256 QAM
Channel coverage (Band)	VHF 2-13, UHF 14-69, DTV 2-69, CATV 1-135, CADTV 1-135
External antenna impedance	75 Ω

Environment condition	
Operating Temperature	0 °C to 40 °C (32 °F to 104 °F)
Operating Humidity	Less than 80 %
Storage Temperature	-20 °C to 60 °C (-4 °F to 140 °F)
Storage Humidity	Less than 85 %

HDMI (PC) supported mode

Resolution	Horizontal Frequency (kHz)	Vertical Frequency (Hz)
640 x 350	31.46	70.09
720 x 400	31.46	70.08
640 x 480	31.46	59.94
800 x 600	37.87	60.31
1024 x 768	48.36	60.00
1360 x 768	47.71	60.01
1152 x 864	54.34	60.05
1280 x 1024	63.98	60.02
1920 x 1080	67.50	60.00

HDMI (DTV) supported mode

Resolution	Horizontal Frequency (kHz)	Vertical Frequency (Hz)
640 x 480p	31.46	59.94
	31.50	60.00
720 x 480p	31.46	59.94
	31.50	60.00
720 x 576p	31.25	50.00
1280 x 720p	37.50	50.00
	44.95	59.94
	45.00	60.00
1920 x 1080i	28.12	50.00
	33.71	59.94
	33.75	60.00
1920 x 1080p	26.97	23.97
	27.00	24.00
	28.12	25.00
	33.71	29.97
	33.75	30.00
	56.25	50.00
	67.43	59.94
	67.50	60.00

Supported External Subtitles

Subtitle	Format
External Subtitle	*.smi, *.srt, *.sub (MicroDVD, SubViewer 1.0/2.0), *.ass, *.ssa, *.txt (TMPlayer), *.psb (PowerDivX), *.dcs (DLP Cinema)
Embedded Subtitle	Matroska(mkv): Sub Station Alpha(SSA), Advanced Sub Station Alpha(ASS), SRT MP4: Timed Text

Supported Photo Formats

File Format	Format	Resolution
.jpeg .jpg .jpe	JPEG	Minimum: 64 (W) x 64 (H), Maximum: - Normal Type: 15360 (W) x 8640 (H) - Progressive Type: 4800 (W) x 3600 (H)
.png	PNG	Minimum: 64 (W) x 64 (H) Maximum: 5760 (W) x 5760 (H)
.bmp	BMP	Minimum: 64 (W) x 64 (H) Maximum: 1920 (W) x 1080 (H)
.heif .heic	HEIF	Minimum: 64 (W) x 64 (H) Maximum: 4800 (W) x 3600 (H)
.avif	AVIF	Minimum: 64 (W) x 64 (H) Maximum: 4800 (W) x 3600 (H)

Supported Audio Formats

File Format	Info
.mp3	(Bit rate) 32 Kbps - 320 Kbps (Sample freq.) 16 kHz - 48 kHz (Support) MPEG1, MPEG2 (channels) mono, stereo
.wav	(Bit rate) - (Sample freq.) 8 kHz ~ 96 kHz (Support) PCM (channels) mono, stereo
.ogg	(Bit rate) 64 Kbps - 320 Kbps (Sample freq.) 8 kHz ~ 48 kHz (Support) Vorbis (channels) mono, stereo
.wma	(Bit rate) 128 Kbps ~ 320 Kbps (Sample freq.) 8 kHz ~ 48 kHz (Support) WMA (channels) up to 6 ch
.flac	(Bit rate) - (Sample freq.) 8 kHz ~ 96 kHz (Support) FLAC (channels) mono, stereo

Supported Video Formats

Extension	Codec	
.asf .wmv	Video	VC-1 Advanced Profile (except for WMVA), VC-1 Simple and Main Profiles
	Audio	WMA Standard (except for WMA v1/ WMA Speech)
.avi	Video	Xvid (GMC is not supported), H.264/AVC, Motion Jpeg, MPEG-4
	Audio	MPEG-1 Layer I, II, MPEG-1 Layer III (MP3), Dolby Digital, LPCM, ADPCM
.mp4 .m4v .mov	Video	H.264/AVC, MPEG-4, HEVC, AV1, VVC
	Audio	Dolby Digital, Dolby Digital Plus, AAC, MPEG-1 Layer III (MP3), Dolby AC-4
.3gp .3g2	Video	H.264/AVC, MPEG-4
	Audio	AAC, AMR-NB, AMR-WB
.mkv	Video	MPEG-2, MPEG-4, H.264/AVC, VP8, VP9, HEVC, AV1
	Audio	Dolby Digital, Dolby Digital Plus, AAC, PCM, MPEG-1 Layer I, II, MPEG-1 Layer III (MP3)
.ts .tp .trp .mts	Video	H.264/AVC, MPEG-2, HEVC
	Audio	MPEG-1 Layer I, II, MPEG-1 Layer III (MP3), Dolby Digital, Dolby Digital Plus, AAC, PCM, Dolby AC-4
.mpg .mpeg .dat	Video	MPEG-1, MPEG-2
	Audio	MPEG-1 Layer I, II, MPEG-1 Layer III (MP3)
.vob	Video	MPEG-1, MPEG-2
	Audio	Dolby Digital, MPEG-1 Layer I, II, DVD-LPCM

- Dolby AC-4, VVC: This feature is available in certain models only.

Key Codes (TYPE A)

* This feature is not available for all models.

Code (Hexa)	Function	Code (Hexa)	Function
00	∧CH / ∧PAGE	45	Q.MENU
01	CH∨ / PAGE∨	4C	— (Dash) / LIST
02	+ VOL	4D	PICTURE
03	VOL —	52	SOUND
06	▶	5B	EXIT
07	◀	61	(Blue)
08	⏻ (Power)	63	(Yellow)
09	(Mute)	71	(Green)
0B	(Input)	72	(Red)
0E	SLEEP	79	RATIO
0F	TV	7C	(Home)
10 - 19	Number Key 0 - 9	8E	▶▶
1A	Q.VIEW	8F	◀◀
1E	FAV	91	SAP/✱ / AUDIO
28	BACK	AA	INFO
39	CAPTION	B0	▶
40	▲	B1	■
41	▼	BA	❚❚
43	(Settings)	AB	GUIDE/✱
44	OK		

- Key code 4C (0 x 4C) is available on ATSC/ISDB models which use major/minor channel. (For South Korea, Japan, North America, Latin America except Colombia models)

Key Codes (TYPE B)

* This feature is not available for all models.

Code (Hexa)	Function	Code (Hexa)	Function
00	CH ∧ PAGE	C0	(Green)
01	CH ∨ PAGE	C1	(Red)
02	VOL +	C2	(Yellow)
03	VOL —	C3	(Blue)
06	>	8E	▶▶
07	<	8F	◀◀
08	⏻ (Power)	B0	▶
09	MUTE DELETE	B1	■
10 - 19	Number Key 0 - 9, ␣ (Space)	BA	❚❚
28	↩ (Back)	AA	INFO
39	CC CHAR/NUM	AB	GUIDE
40	∧	7C	SMART
41	∨	7E	SIMPLINK
43	MENU SETTINGS	DC	3D/*
44	OK ENTER	60	PIP/*
0B	INPUT	61	PIP INPUT/*
0C	PORTAL	71	PIPCH+/*
0E	TIMER	72	PIPCH-/*
1A	FLASHBK	63	SWAP/*
4C	– (Dash)	91	VD/*
5B	EXIT	-	TV
		-	DVD

- Key code 4C (0 x 4C) is available on ATSC/ISDB models which use major/minor channel. (For South Korea, Japan, North America, Latin America except Colombia models)

External Control Device Setup

RS-232C Setup

- Image shown may differ from your TV.

Connect the RS-232C (serial port) input jack to an external control device (such as a computer or an A/V control system) to control the product's functions externally.

Connect the serial port of the control device to the RS-232C jack on the product back panel.

- RS-232C connection cables are not supplied with the product.

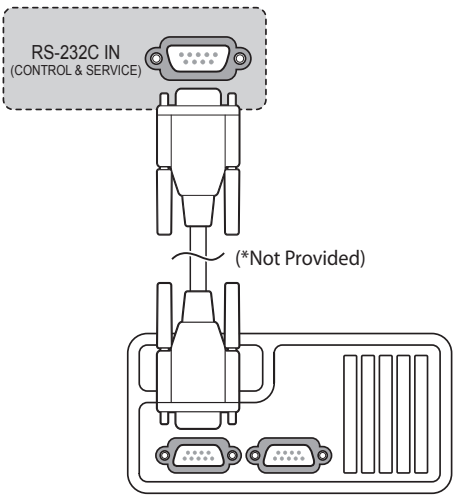

(Depending upon model)

Phone jack Type

(Depending upon model)

- You need to purchase the phone-jack to RS-232C cable required for the connection between the PC and the TV, which is specified in the manual.

* For other models, connect to the USB port.

* The connection interface may differ from your TV.

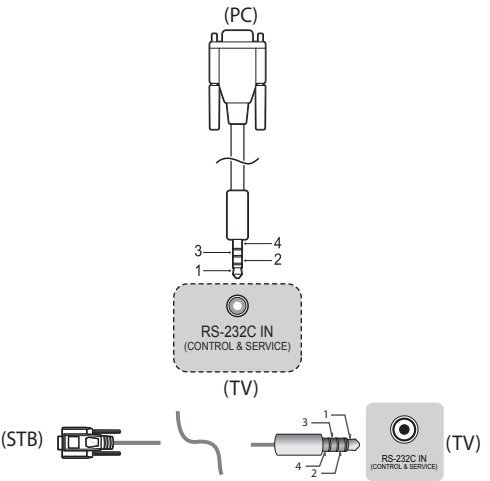

Type of Connector: D-Sub 9-Pin Male

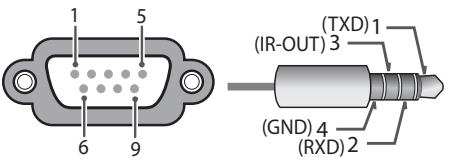

No.	Pin name
1	3.5 V
2	RXD (Receive data)
3	TXD (Transmit data)
4	IR OUT from TV (Depending upon model)
5	GND
6	No Connection
7	No Connection (5 V available in some models)
8	No Connection
9	No Connection (12 V available in some models)

RS-232C Configurations

7-Wire Configurations
(Standard RS-232C cable)

	PC		TV	
RXD	2	● ——— ●	3	TXD
TXD	3	● ——— ●	2	RXD
GND	5	● ——— ●	5	GND
DTR	4	● ——— ●	6	DSR
DSR	6	● ——— ●	4	DTR
RTS	7	● ——— ●	8	CTS
CTS	8	● ——— ●	7	RTS
	D-Sub 9		D-Sub 9	

3-Wire Configurations
(Not standard)

	PC		TV	
RXD	2	● ——— ●	3	TXD
TXD	3	● ——— ●	2	RXD
GND	5	● ——— ●	5	GND
DTR	4		6	DSR
DSR	6		4	DTR
RTS	7		8	CTS
CTS	8		7	RTS
	D-Sub 9		D-Sub 9	

3-Wire Configurations

	PC		TV	
RXD	2	● ——— ●	2	RXD
TXD	3	● ——— ●	1	TXD
GND	5	● ——— ●	4	GND
DTR	4		3	IR-OUT
DSR	6			
RTS	7			
CTS	8			
	D-Sub 9		Phone-Jack	

Communication Parameters

- Baud rate: 9,600 bps (UART)
- Data length: 8 bits
- Parity: None
- Stop bit: 1 bit
- Communication code: ASCII code
- Use a crossed (reverse) cable.

Set ID

For Set ID number, see **"Real data mapping".**
The adjustment range is 1-99.

- Some models support the [Set ID] up to 1000.

Command Reference List

(Depending upon model)

	Command1	Command2	Data (Hexadecimal)
1 Power	k	a	00 to 01
2 Aspect Ratio	k	c	(page 31)
3 Screen Mute	k	d	(page 32)
4 Volume Mute	k	e	00 to 01
5 Volume Control	k	f	00 to 64
6 Contrast	k	g	00 to 64
7 Brightness	k	h	00 to 64
8 Color	k	i	00 to 64
9 Tint	k	j	00 to 64
10 Sharpness	k	k	00 to 32
11 OSD Select	k	l	00 to 01
12 Remote Control Lock Mode	k	m	00 to 01
13 Balance	k	t	00 to 64
14 Color Temperature	x	u	00 to 64
15 Energy Saving	j	q	(page 34)
16 Auto Configuration	j	u	01
17 Equalizer	j	v	(page 34)
18 Tune Command	m	a	(page 35)
19 Channel Skip / Add	m	b	00 to 01
20 Key	m	c	(page 35)
21 Control Backlight	m	g	00 to 64
22 Input select	x	b	(page 36)
23 Channel block/unblock	m	d	(page 36)
24 Fail Over Mode	m	i	(page 37)
25 Fail Over Input Select	m	j	(page 37)
26 Internal storage media contents play	s	n, a8	(page 38)

- During playing media, all commands except Power (ka) and Key (mc) are not executed and treated as NG. With RS-232C cable, TV can communicate "ka command" in power-on or power-off status. but with USB-to-Serial converter cable, the command works only if TV is on.

Transmission / Receiving Protocol

(Depending upon Model)

Transmission

(Command1)(Command2)( )(Set ID)( )(Data)(Cr)

(Command1): First command to control the TV. (j, k, m or x)

(Command2): Second command to control the TV.

(Set ID): You can adjust the set ID to choose desired monitor ID number in option menu. Adjustment range is 1 to 99. When selecting Set ID '0', every connected set is controlled. Set ID is indicated as decimal (1 to 99) on menu and as Hexa decimal (0 x 0 to 0 x 63) on transmission/receiving protocol.

(Data): To transmit command data. Transmit 'FF' data to read status of command.

(Cr): Carriage Return

ASCII code '0 x 0D'

( ): ASCII code 'space (0 x 20)'

- Some models support the Set ID up to 1000 (Hexa decimal 0 x 3E8).

OK Acknowledgement

(Command2)( )(Set ID)( )(OK)(Data)(x)

* The set transmits ACK (acknowledgement) based on this format when receiving normal data. At this time, if the data is data read mode, it indicates present status data. If the data is data write mode, it returns the data of the PC computer.

Error Acknowledgement

(Command2)( )(Set ID)( )(NG)(Data)(x)

* The set transmits ACK (acknowledgement) based on this format when receiving abnormal data from non-viable functions or communication errors.

Data 00: Illegal Code

1 Power (Command: k a)

▶ To control Power On/Off of the set.

Transmission

(k)(a)( )(Set ID)( )(Data)(Cr)

Data 00: Off

Data 01: On

Ack

(a)( )(Set ID)( )(OK/NG)(Data)(x)

▶ To Show TV is Power On/Off.

Transmission

(k)(a)( )(Set ID)( )(FF)(Cr)

Ack

(a)( )(Set ID)( )(OK/NG)(Data)(x)

* Similarly, if other functions transmit '0 x FF' data based on this format, Acknowledgement data feed back presents status about each function.
* OK Ack., Error Ack. and other message may display on the screen when TV is power On.

2 Aspect Ratio (Command: k c) (Main Picture Size)

▶ To adjust the screen format. (Main picture format) You can also adjust the screen format using the picture settings.

Transmission

(k)(c)( )(Set ID)( )(Data)(Cr)

Data 01: 4:3 (Normal screen - Just Scan Off)

Data 02: 16:9 (Wide screen - Just Scan Off)

Data 06: Original (Just Scan Off)

Data 09: Just Scan

* Please make sure that the model doesn't support both Vertical Zoom and All-Direction Zoom mode.

Ack

(c)( )(Set ID)( )(OK/NG)(Data)(x)

* Using the PC input, you select either 16:9 or 4:3 screen aspect ratio.
* In DTV/HDMI (1080i 50 Hz / 60 Hz, 720p 50 Hz / 60 Hz, 1080p 24 Hz / 30 Hz / 50 Hz / 60 Hz), Component (720p, 1080i, 1080p) mode, Just Scan is available.
* Full Wide is supported only for Digital, Analogue, AV.

3 Screen Mute (Command: k d)

▶ To select screen mute on/off.

Transmission

(k)(d)( )(Set ID)( )(Data)(Cr)

Data 00: Screen mute off (Picture on) / Video mute off

Data 01: Screen mute on (Picture off)

Data 10: Video mute on

Ack

(d)( )(Set ID)( )(OK/NG)(Data)(x)

* In case of video mute on only, TV will display On Screen Display (OSD). But, in case of Screen mute on, TV will not display OSD.

4 Volume Mute (Command: k e)

▶ To control volume mute on/off.
You can also adjust mute using the mute button on remote control.

Transmission

(k)(e)( )(Set ID)( )(Data)(Cr)

Data 00: Volume mute on (Volume off)

Data 01: Volume mute off (Volume on)

Ack

(e)( )(Set ID)( )(OK/NG)(Data)(x)

5 Volume Control (Command: k f)

▶ To adjust volume.
You can also adjust volume with the volume buttons on remote control.

Transmission

(k)(f)( )(Set ID)( )(Data)(Cr)

Data Min: 00 to Max: 64

* Refer to "Real data mapping".

Ack

(f)( )(Set ID)( )(OK/NG)(Data)(x)

6 Contrast (Command: k g)

▶ To adjust screen contrast.
You can also adjust contrast in the picture settings.

Transmission

(k)(g)( )(Set ID)( )(Data)(Cr)

Data Min: 00 to Max: 64

* Refer to "Real data mapping".

Ack

(g)( )(Set ID)( )(OK/NG)(Data)(x)

7 Brightness (Command: k h)

▶ To adjust screen brightness.
You can also adjust brightness in the picture settings.

Transmission

(k)(h)( )(Set ID)( )(Data)(Cr)

Data Min: 00 to Max: 64

* Refer to "Real data mapping".

Ack

(h)( )(Set ID)( )(OK/NG)(Data)(x)

8 Color (Command: k i)

▶ To adjust the screen color.
You can also adjust color in the picture settings.

Transmission

(k)(i)( )(Set ID)( )(Data)(Cr)

Data Min: 00 to Max: 64

* Refer to "Real data mapping".

Ack

(i)( )(Set ID)( )(OK/NG)(Data)(x)

9 Tint (Command: k j)

▶ To adjust the screen tint.
You can also adjust tint in the picture settings.

Transmission

(k)(j)( )(Set ID)( )(Data)(Cr)

Data Red: 00 to Green: 64

* Refer to "Real data mapping".

Ack

(j)( )(Set ID)( )(OK/NG)(Data)(x)

10 Sharpness (Command: k k)

▶ To adjust the screen sharpness.
You can also adjust sharpness in the picture settings.

Transmission

(k)(k)( )(Set ID)( )(Data)(Cr)

Data Min: 00 to Max: 32

* Refer to "Real data mapping".

Ack

(k)( )(Set ID)( )(OK/NG)(Data)(x)

11 OSD Select (Command: k l)

▶ To select OSD (On Screen Display) on/off when controlling remotely.

Transmission

(k)(l)( )(Set ID)( )(Data)(Cr)

Data 00: Off

Data 01: On

Ack

(l)( )(Set ID)( )(OK/NG)(Data)(x)

12 Remote Control Lock Mode (Command: k m)

▶ To lock the front panel controls on the monitor and remote control.

Transmission

(k)(m)( )(Set ID)( )(Data)(Cr)

Data 00: Off

Data 01: On

Ack

(m)( )(Set ID)( )(OK/NG)(Data)(x)

* If you are not using the remote control, use this mode. When main power is on/off, external control lock is released.
* In the standby mode, if key lock is on, TV will not turn on by power on key of IR & Local Key.

13 Balance (Command: k t)

▶ To adjust balance.
You can also adjust balance in the audio settings.

Transmission

(k)(t)( )(Set ID)( )(Data)(Cr)

Data L: 00 to R: 64

* Refer to "Real data mapping".

Ack

(t)( )(Set ID)( )(OK/NG)(Data)(x)

14 Color Temperature (Command: x u)

▶ To adjust Color Temperature. You can also adjust Color Temperature in the picture settings.

Transmission

(x)(u)( )(Set ID)( )(Data)(Cr)

Data Warm: 00 to Cool:64

* Refer to "Real data mapping".

Ack

(u)( )(Set ID)( )(OK/NG)(Data)(x)

15 Energy Saving (Command: j q)

▶ To reduce the power consumption of the TV. You can also adjust Energy Saving in picture settings.

Transmission

(j)(q)( )(Set ID)( )(Data)(Cr)

Power Saving Function					Level				Description
7	6	5	4		3	2	1	0	
0	0	0	0	Low Power	0	0	0	0	Off
0	0	0	0	Low Power	0	0	0	1	Minimum
0	0	0	0	Low Power	0	0	1	0	Medium
0	0	0	0	Low Power	0	0	1	1	Maximum
0	0	0	0	Low Power	0	1	0	1	Screen Off
0	0	0	0	Low Power	0	1	0	0	Auto

▶ Auto is available in TV that supports 'Intelligent Sensor'.

Ack

(q)( )(Set ID)( )(OK/NG)(Data)(x)

16 Auto Configuration (Command: j u) (Only RGB support model)

▶ To adjust picture position and minimize image shaking automatically. It works only in RGB (PC) mode.

Transmission

(j)(u)( )(Set ID)( )(Data)(Cr)

Data 01: To set

Ack

(u)( )(Set ID)( )(OK/NG)(Data)(x)

17 Equalizer (Command: j v)

▶ To adjust equalizer.

Transmission

(j)(v)( )(Set ID)( )(Data)(Cr)

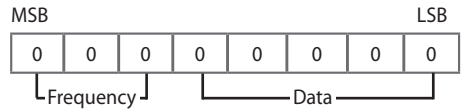

7	6	5	Frequency	4	3	2	1	0	Step
0	0	0	1st Band	0	0	0	0	0	0 (decimal)
0	0	1	2nd Band	0	0	0	0	1	1 (decimal)
0	1	0	3rd Band	...	...	...	...	...	...
0	1	1	4th Band	1	0	0	1	1	19 (decimal)
1	0	0	5th Band	1	0	1	0	0	20 (decimal)

Ack

(v)( )(Set ID)( )(OK/NG)(Data)(x)

18 Tune Command (Command: m a)

▶ Select channel to following physical number.

Transmission

(m)(a)( )(Set ID)( )(Data 00)( )(Data 01)( )(Data 02)(Cr)

Data 00: High channel data
Data 01: Low channel data
ex. No. 47 → 00 2F (2FH)
No. 394 → 01 8A (18AH),
DTV No. 0 → Don't care
Data 02: (Antenna)
0 x 00: Analogue Main
0 x 10: DTV Main
0 x 20: Radio
(Cable)
0 x 80: Analogue Main
0 x 90: DTV Main
0 x A0: Radio
(Satellite)
0 x 40: DTV Main
0 x 50: Radio Main
Channel data range
Min: 00 Max: 270F (0 to 9999)

Ack

(a)( )(Set ID)( )(OK/NG)(Data)(x)

19 Channel Skip / Add (Command: m b)

▶ To set skip status for the current Channel.

Transmission

(m)(b)( )(Set ID)( )(Data)(Cr)

Data 00: Skip
Data 01: Add

Ack

(b)( )(Set ID)( )(OK/NG)(Data)(x)

20 Key (Command: m c)

▶ To send IR remote key code.

Transmission

(m)(c)( )(Set ID)( )(Data)(Cr)

Data "Key Codes (TYPE A)"
Data "Key Codes (TYPE B)"

Ack

(c)( )(Set ID)( )(OK/NG)(Data)(x)

21 Control Backlight (Command: m g)

▶ To control the backlight.

Transmission

(m)(g)( )(Set ID)( )(Data)(Cr)

Data Min: 00 to Max: 64

Ack

(g)( )(Set ID)( )(OK/NG)(Data)(x)

22 Input select (Command: x b) (Main Picture Input)

▶ To select input source for main picture.

Transmission

(x)(b)( )(Set ID)( )(Data)(Cr)

Data Structure

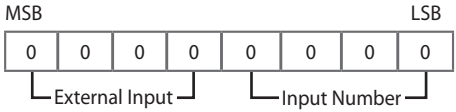

External Input				Data
0	0	0	0	DTV
0	0	0	1	Analogue
0	0	1	0	AV
0	1	0	0	Component
0	1	1	0	RGB
0	1	1	1	HDMI
1	0	0	0	
1	0	0	1	
1	0	1	0	

Input Number				Data
0	0	0	0	Input1
0	0	0	1	Input2
0	0	1	0	Input3
0	0	1	1	Input4

Ack

(b)( )(Set ID)( )(OK/NG)(Data)(x)

23 Channel block/unblock (Command: m d)

▶ This command may work differently depending upon model and signal.

(For South Korea, North/Latin America except Colombia Model)

Transmission

(m)(d)( )(Set ID)( )(Data 00)( )(Data 01)( )(Data 02)
(Data 03)(Data 04)( )(Data 05)( )(Data 06)(Cr)

(Data 00): Physical Channel Number

(Data 01)(Data 02): Major Channel Number

- (Data 01): High Channel data
- (Data 02): Low Channel data
  00 00 ~ 27 0F (Decimal: 0 ~ 9999)

(Data 03)(Data 04): Minor Channel Number

- (Data 03): High Channel data
- (Data 04): Low Channel data

(Data 05): Input Source

- 02: Antenna TV (DTV)
- 06: Cable TV (CADTV)
- 0b: Cable DTV Plus

(Data 06): block(01)/unblock(00)

Ack

(d)( )(Set ID)( )(OK/NG)(Data 00)(Data 01)(Data 02)
(Data 03)(Data 04)(Data 05)(Data 06)(x)

* Block/Unblock Command Examples

Block/Unblock Cable DTV (DVB-T) Channel 18-2

(Set ID) = 01

(Data 00) = Physical Channel Number 18 = 12(HEX)

(Data 01) & (Data 02) = Major Channel Number is 18 = 00 12(HEX)

(Data 03) & (Data 04) = Minor Channel Number is 2 = 00 02(HEX)

(Data 05) = cable DTV = 06

(Data 06) = block(01)/unblock(00)

Result:

md 01 12 00 12 00 02 06 (01/00)

(For all other regions including Colombia, Excluding the above countries)

Transmission

(m)(d)( )(Set ID)( )(Data 00)( )(Data 01)( )(Data 02) (Data 03)(Data 04)(Cr)

(Data 00): Physical Channel Number

(Data 01)(Data 02): Channel Data
- (Data 01): High Channel data
- (Data 02): Low Channel data
  00 00 ~ 27 0F (Decimal: 0 ~ 9999)

(Data 03): Input Source
- 10: Antenna TV (DTV)
- 20: Antenna Radio (Radio)
- 40: Satellite TV (SDTV)
- 50: Satellite Radio (S-Radio)
- 90: Cable TV (CADTV)
- a0: Cable Radio (CA-Radio)

(Data 04): block(01)/unblock(00)

Ack

(d)( )(Set ID)( )(OK/NG)(Data 00)(Data 01)(Data 02) (Data 03)(Data 04)(x)

* Block/Unblock Command Examples
  Block/Unblock Digital Antenna (DVB-T) Channel 800

(Set ID) = All = 01

(Data 00) = Physical Channel Number 30 = 1E

(Data 01) & (Data 02) = Channel Data is 800 = 03 20

(Data 03) = Digital Antenna TV = 10

(Data 04) = block/unblock = (01/00)

Result:

md 01 1E 03 20 10 (01/00)

24 Fail Over Mode (Command: m i)

▶ Selects the Fail Over mode.

Transmission

(m)(i)( )(Set ID)( )(Data)(Cr)

Data 00: Off

Data 01: Auto

Data 02: Manual

Ack

(i)( )(Set ID)( )(OK/NG)(Data)(x)

25 Fail Over Input Select (Command: m j)

▶ Selects an input source for fail over. (This feature is only available when Fail Over is set to Custom.)

Transmission

(m)(j)( )(Set ID)( )(Data 1)( )(Data 2)( )(Data 3)( )(Data 4)...( )(DataN)(Cr)

Data 1-N (Input priority 1-N)

Data 20: AV1

Data 21: AV2

Data 22: AV3

Data 90: HDMI1

Data 91: HDMI2

Data 92: HDMI3

Data 93: HDMI4

Ack

(j)( )(Set ID)( )(OK/NG)(Data 1)(Data 2)(Data 3)(Data 4)...(DataN)(x)

* Some input signals may not be available for all models.
* The data number (N) may vary depending upon the model. (The data number depends on the number of supported input signals.)

26 Internal storage media contents play (Command: s n, a8)

▶ Plays media stored in the internal memory.

▶ This command may work differently depending upon model and signal.

Transmission

(s)(n)( )(Set ID)( )(a)(8)( )(Data)(Cr)

Data 01: Media contents play

Ack

(n)( )(Set ID)( )(OK/NG)(a)(8)( )(Data)(x)

* **Real data mapping**

00:	Step 0
⋮	
A:	Step 10 (Set ID 10)
⋮	
F:	Step 15 (Set ID 15)
10:	Step 16 (Set ID 16)
⋮	
64:	Step 100
⋮	
6E:	Step 110
⋮	
73:	Step 115
74:	Step 116
⋮	
CF:	Step 199
⋮	
FE:	Step 254
FF:	Step 255

IR OUT Using Guide

(except for 32LN340CBUD)

Suitable / Not Recommend remote-controller data format

Item	Data format code	Note
Suitable Data Format	NEC, Toshiba Full Repeat Code Format	Single: Enable Repeat: Enable
	Philips RC5, RC6 Code Format	
	Zenith Code Format	
Not Recommend Data Format	Matsushita, RCA Code Format	Single: Enable Repeat: Disable
	Sony 12/15/20 bit, Mitsubishi Code Format	
	Sharp, JVC, R-step, Philips RCMM, RECS-80, XMP Code Format	Single: Disable Repeat: Disable

IR Receiver specifications

Carrier frequency	37.9 KHz
Peak Wavelength	940 nm
Minimum burst length	Min. 300 us
Minimum gap time is required of	Min. 350 us
Data word length	Max. 100 ms
Minimum gap time in the data stream is needed of	Min. 50 ms

Parameter	Symbol	Conditions	Min	Typ	Max	Unit
High Level Out Pulse Width	Twh	Burst Wave = 600 ㎲ Period = 1.2 ㎳	400	-	800	㎲
Low Level Out Pulse Width	Twl		400	-	800	㎲

⚠ If not use the remote-controller with data formats recommended, IR output signals will be suppressed automatically by IR receiver. In this case, LG does not guarantee IR working function. To make sure of this matter, here are two methods as below.

- Use the remote-controller with suitable data formats.
- Use the IR dongle receiver of the set-top box.

Open Source Software Notice Information

To obtain the source code that is contained in this product, under GPL, LGPL, MPL, and other open source licenses that have the obligation to disclose source code, and to access all referred license terms, copyright notices and other relevant documents, please visit *https://opensource.lge.com*.

LG Electronics will also provide open source code to you on CD-ROM for a charge covering the cost of performing such distribution (such as the cost of media, shipping, and handling) upon email request to *opensource@lge.com*.

This offer is valid to anyone in receipt of this information for a period of three years after our last shipment of this product.

Software Download Information

(Depending upon model)

- SuperSign Software & Manual
  - Visit the LG Electronics website (*http://partner.lge.com*) and download the latest software for your model.

Updating Firmware

(Depending upon model)

You can update the firmware for the product by downloading the latest firmware.

1. Download the latest firmware at *partner.lge.com*. (Signing up for a membership and log-in required)
2. Create a folder named "LG_DTV" or "lg_dtv" on a USB memory device.
3. Move the downloaded file to the folder that you have created on the USB memory device.
4. Connect the USB memory device to the USB port on your TV.
5. When a pop-up window appears, start the update by following the instructions.

Licenses

Supported licenses may differ by model. For more information about licenses, visit *www.lg.com*.

Manufactured under license from Dolby Laboratories. Dolby, Dolby Vision, Dolby Vision IQ, Dolby Audio, Dolby Atmos, and the double-D symbol are trademarks of Dolby Laboratories Licensing Corporation.

HDMI™
HIGH-DEFINITION MULTIMEDIA INTERFACE

The terms HDMI, HDMI High-Definition Multimedia Interface, HDMI trade dress and the HDMI Logos are trademarks or registered trademarks of HDMI Licensing Administrator, Inc.

CRESTRON connected

(Depending upon model)

HEVC Advance™
Covered by patents at patentlist.accessadvance.com

Regulatory

FCC Notice

(For USA)

This equipment has been tested and found to comply with the limits for a Class B digital device, pursuant to Part 15 of the FCC Rules. These limits are designed to provide reasonable protection against harmful interference in a residential installation. This equipment generates, uses, and can radiate radio frequency energy and, if not installed and used in accordance with the instructions, may cause harmful interference to radio communications. However, there is no guarantee that interference will not occur in a particular installation. If this equipment does cause harmful interference to radio or television reception, which can be determined by turning the equipment off and on, the user is encouraged to try to correct the interference by one or more of the following measures:

- Reorient or relocate the receiving antenna.
- Increase the separation between the equipment and the receiver.
- Connect the equipment to an outlet on a circuit different from that to which the receiver is connected.
- Consult the dealer or an experienced radio/TV technician for help.

This device complies with part 15 of the FCC Rules. Operation is subject to the following two conditions: (1) this device may not cause harmful interference and (2) this device must accept any interference received, including interference that may cause undesired operation. Any changes or modifications in construction of this device which are not expressly approved by the party responsible for compliance could void the user's authority to operate the equipment.

FCC Radio Frequency Interference Requirements (for UNII devices)

(For USA)

High power radars are allocated as primary users of the 5.25 to 5.35 GHz and 5.65 to 5.85 GHz bands. These radar stations can cause interference with and/or damage this device. This device cannot be co-located with any other transmitter.

FCC RF Radiation Exposure Statement

(For USA)

[For having wireless function (WLAN, Bluetooth,...)]

This equipment complies with FCC radiation exposure limits set forth for an uncontrolled environment. This transmitter must not be co-located or operating in conjunction with any other antenna or transmitter. This equipment should be installed and operated with minimum distance 20 cm (7.8 inches) between the antenna and your body. Users must follow the specific operating instructions for satisfying RF exposure compliance.

Industry Canada Statement

(For Canada)

[For having wireless function (WLAN, Bluetooth,...)]

This device contains licence-exempt transmitter(s)/ receiver(s) that comply with Innovation, Science and Economic Development Canada's licence-exempt RSS(s). Operation is subject to the following two conditions:

(1) This device may not cause interference.

(2) This device must accept any interference, including interference that may cause undesired operation of the device.

IC Radiation Exposure Statement

(For Canada)

[For having wireless function (WLAN, Bluetooth,...)]

This equipment complies with IC radiation exposure limits set forth for an uncontrolled

environment. This equipment should be installed and operated with minimum distance 20 cm (7.8 inches) between the antenna & your body.

NOTE: THE MANUFACTURER IS NOT RESPONSIBLE FOR ANY RADIO OR TV INTERFERENCE CAUSED BY UNAUTHORIZED MODIFICATIONS TO THIS EQUIPMENT. SUCH MODIFICATIONS COULD VOID THE USER'S AUTHORITY TO OPERATE THE EQUIPMENT.

RSS-247 Requirement

(For Canada)

[For product having the wireless function using 5 GHz frequency bands]

(1) The device for operation in the band 5150–5250 MHz is only for indoor use to reduce the potential for harmful interference to co-channel mobile satellite systems;

(2) For devices with detachable antenna(s), the maximum antenna gain permitted for devices in the bands 5250-5350 MHz and 5470-5725 MHz shall be such that the equipment still complies with the e.i.r.p. limit;

(3) For devices with detachable antenna(s), the maximum antenna gain permitted for devices in the band 5725-5850 MHz shall be such that the equipment still complies with the e.i.r.p. limits as appropriate; and

(4) [For devices operating in the band 5250-5350 MHz having an e.i.r.p. greater than 200 mW] Antenna type(s), antenna models(s), and worst-case tilt angle(s) necessary to remain compliant with the e.i.r.p. elevation mask requirement set forth in section 6.2.2.3 of RSS-247 shall be clearly indicated.

Users should also be advised that high-power radars are allocated as primary users (i.e. priority users) of the bands 5250-5350 MHz and 5650-5850 MHz and that these radars could cause interference and/or damage to LE-LAN devices.

NOTE TO CABLE/TV INSTALLER

(For USA and Canada)

This reminder is provided to call the CATV system installer's attention to Article 820-40 of the National Electric Code (U.S.A.). The code provides guidelines for proper grounding and, in particular, specifies that the cable ground shall be connected to the grounding system of the building, as close to the point of the cable entry as practical.

WARNING! (STABILITY HAZARD)

A television set may fall, causing serious personal injury or death. Many injuries, particularly to children, can be avoided by taking simple precautions such as:

– ALWAYS use cabinets or stands or mounting methods recommended by the manufacturer of the television set.

– ALWAYS use furniture that can safely support the television set.

– ALWAYS ensure the television set is not overhanging the edge of the supporting furniture.

– ALWAYS educate children about the dangers of climbing on furniture to reach the television set or its controls.

– ALWAYS route cords and cables connected to your television so they cannot be tripped over, pulled or grabbed.

– NEVER place a television set in an unstable location.

– NEVER place the television set on tall furniture (for example, cupboards or bookcases) without anchoring both the furniture and the television set to a suitable support.

– NEVER place the television set on cloth or other materials that may be located between the television set and supporting furniture.

– NEVER place items that might tempt children to climb, such as toys and remote controls, on the top of the television or furniture on which the television is placed.

If the existing television set is going to be retained and relocated, the same considerations as above should be applied.

Symbols

~	Refers to alternating current (AC).
⎓	Refers to direct current (DC).
⧈	Refers to class II equipment.
⏻	Refers to stand-by.
|	Refers to "ON" (power).
ϟ	Refers to dangerous voltage.

LG Take-back & Recycling Policy

(For USA)

LG Electronics offers a customized e-waste take-back & recycling service that meets local needs and requirements in the countries where e-waste regulations are in place, and also provides product take-back & recycling service voluntarily in some regions. LG Electronics evaluates products' recyclability at the design step selectively, with the goal of improving recyclability where practicable. Through these activities, LG Electronics seeks to contribute to conserving natural resources and protecting the environment. For more information, please visit our global site at *https://www.lg.com/recycling*

Consumer Technology Association™

CHILD SAFETY:
PROPER TELEVISION PLACEMENT MATTERS

THE CONSUMER TECHNOLOGY INDUSTRY CARES

Manufacturers, retailers and the rest of the consumer technology industry are committed to making products safe and enjoyable. As you enjoy your television, please note that all televisions – new and old- must be supported on proper stands or installed according to the manufacturer's recommendations. Televisions that are inappropriately situated on dressers, bookcases, shelves, desks, speakers, chests, carts, etc., may fall over, resulting in injury.

TUNE IN TO SAFETY

- **NEVER** allow children to climb on or play on the television or the furniture on which the television is placed.
- **NEVER** place the television on furniture that can easily be used as steps, such as a chest of drawers.
- **ALWAYS** follow the manufacturer's recommendations for the safe installation of your television.
- **ALWAYS** read and follow all instructions for proper use of your television.
- **ALWAYS** install the television where it cannot be pushed, pulled over or knocked down.
- **ALWAYS** route cords and cables connected to the television so that they cannot be tripped over, pulled or grabbed.

WALL OR CEILING MOUNT YOUR TELEVISION

- **ALWAYS** contact your retailer about professional installation if you have any doubts about your ability to safely mount your television.
- **ALWAYS** use a mount that has been recommended by the television manufacturer and has a safety certification by a Nationally Recognized Testing Laboratory (NRTL).
- **ALWAYS** follow all instructions supplied by the television and mount manufacturers.
- **ALWAYS** make sure that the wall or ceiling where you are mounting the television is appropriate. Use proper anchoring systems for different wall or ceiling types (e.g. wood, concrete, metal, etc.). If you are unsure, contact a professional installer.
- Televisions can be heavy. A minimum of two people is required for a wall or ceiling mount installation.

MOVING AN OLDER TELEVISION TO A NEW PLACE IN YOUR HOME

- **REMEMBER** Special care should be made in the placement of older CRT/flat-panel televisions. Many new television buyers move their older CRT/flat-panel televisions into a secondary room after the purchase of a flat-panel television.
- **NEVER** place your older CRT/flat-panel television on a dresser where children may be tempted to use the drawers to climb.
- **ALWAYS** place your older CRT/flat-panel television on furniture that is sturdy and appropriate for its size and weight.
- **ALWAYS** make sure your older CRT/flat-panel television does not hang over the edge of your furniture.

Life's Good

Supplier's Declaration of Conformity	
Trade Name	LG
Responsible Party	LG Electronics USA, Inc.
Address	111 Sylvan Avenue, North Building, Englewood Cliffs, NJ 07632
E-mail	lg.environmental@lge.com

The model and serial number of the product are located on the back and on one side of the product. Record them below in case you ever need service.

MODEL _____

SERIAL NO. _____

LG Customer Information Center
For inquires or comments, visit www.lg.com or call;
1-888-865-3026 USA, Commercial User
1-855-286-2456 CANADA