OWNER'S MANUAL

LG MAGNIT All-in-One

(LED SCREEN)

Please read the safety information carefully before using this product.
After reading this manual, keep it in an easily accessible location for future reference.

LAAB136BXNA

www.lg.com

Copyright © 2026 LG Electronics Inc. All Rights Reserved.

TABLE OF CONTENTS

SAFETY PRECAUTIONS 3
- Precautions for the AC Cable and Power .4
- Precautions for Moving the Product 6
- Precautions for Installing the Product 7
- Precautions for Using the Power Cable 9
- Precautions for Cleaning the Product..... 10
- Precautions for Using the Product..... 11
- Precautions for Using the Remote control. 13
- Product Disposal 13

ASSEMBLING AND PREPARING 14
- Optional Accessories.....15
- Handling for Protecting LED Package Screen.....17
- Installation Precautions Guide 20
- Installation Location.....22
- Buttons.....24
- Terminal.....25

USING THE REMOTE CONTROL 26
- Magic Remote.....26
- Remote Control 29

INSTALLATION GUIDE 31

SETTINGS 46
- Home 46
- Ez Setting.....47
- General.....56
- Display.....70
- Sound.....82
- Admin 85

CONTENT MANAGER.....88
- Web Login.....88
- Content Manager.....89

GALLERY MODE 98

SCREENSHARE 99

MANAGEMENT TOOLS.....100
- Picture ID.....100

IR CODE 101

CONTROLLING MULTIPLE PRODUCTS.....103
- Connecting cables 103
- Communication Parameter.....104
- Command Reference List.....105
- Transmission/Reception Protocol..... 110

TROUBLESHOOTING 136

PRODUCT SPECIFICATIONS138

LICENSES 145

WARNING - This product is not intended for household use.

SAFETY PRECAUTIONS

The safety precautions are intended to prevent unexpected danger or harm by helping the user to use the product safely and for its intended purpose.

⚠ WARNING

If you ignore the warning message, you may be seriously injured or there is a possibility of accident or death.

⚠ CAUTION

If you ignore the caution message, you may be slightly injured or the product may be damaged.

⚠ WARNING

Indoor Use Only.

Precautions for the AC Cable and Power

⚠ WARNING

- Before using an AC cable, make sure it conforms to the national standards.
- Operate the display only from a power source (i.e. voltage) indicated in the product specification.
  - Otherwise the product can be damaged, fire can occur or you may be electrocuted. If you are not sure what type of power supply you have, consult a certified installation company.
- Be sure to connect the AC cable to a grounded power disconnecting device.
  - If you do not you may be electrocuted or injured or the product can be damaged.
- Insert the AC cable securely so that it does not come loose.
  - Poor connection may cause a fire or electric shock.
- In the presence of thunder and lightning, never touch the power cord and signal cable because it can be very dangerous.
  - It can cause electric shock.
- Be careful not to place heavy objects (electronic appliances, clothes, etc.) on or step on the AC cable. In addition, do not bend or pull the AC cable with excessive force.
  - Damaged power cords may cause a fire or electric shock.
- Do not connect the AC cable to a power disconnecting device if it has been damaged by a sharp object.
  - You may be electrocuted.
- Do not insert a conductor (such as a metal chopstick) into the power disconnecting device while the AC cable is connected on the other side of the same power disconnecting device. In addition, do not touch the AC cable directly after removing it from the power disconnecting device.
  - You may be electrocuted.

- If water or any foreign substance enters the product, disconnect the AC cable immediately and contact the service centre.
  - Otherwise, this may cause a fire or electric shock due to damage to the product.
- Keep the AC cable away from heating devices.
  - The cord coating may melt and cause fire or electric shock.
- Never disassemble, repair, or modify the AC cable.
  - This may cause a fire or electric shock.
- As long as this unit is connected to the AC wall outlet, it is not disconnected from the AC power source even if the unit is turned off.
- For the power consumption to be zero, the AC cable must be disconnected.

⚠ CAUTION

- If there is dust on the AC cable or the power disconnecting device, wipe them clean.
  - Overheating due to layers of dust may cause a fire or electric shock.
- If there is moisture on the AC cable or the power disconnecting device, wipe them clean. In addition, do not touch them if your hands are wet.
  - This may cause an electric shock.
- Do not turn the product on or off by connecting or disconnecting the AC cable. In other words, do not use the AC cable as a switch.
  - This may cause an electric shock or product malfunction.
- Do not disconnect the AC cable while using the product.
  - Electrical shock can damage the product.

Precautions for Moving the Product

WARNING

- Contact the service centre before moving the product.
  - It may cause electric shock and damage the product.
- Make sure the product is turned off, unplugged, and all cables have been removed before the product is moved.
  - You may be electrocuted or the product can be damaged.
- When moving the product, do not shock or cause an impact on the front panel.
  - You may be electrocuted or the product can be damaged.
- Use the correct number of people according to the weight of the product. (Under 25 kg per person use lifting equipment when exceeding 100 kg)
  - If use the damaged product again, contact the service centre because it can cause electric shock or fire.
- Do not hold it upside down while holding only the stand. (It is for stand supported models only.)
  - This may cause stand warping, panel damage and other types of product damage.

CAUTION

- Do not dispose of the product-packing box. Use it when moving by putting the product in the box to carry it.

Precautions for Installing the Product

⚠ WARNING

- Contact the service centre before installing the product.
  - It can cause electric shock and damage the product.
- Do not drop an object on or impact on the product. Keep out of reach of children and do not place toys or objects near the product to prevent throwing things on the product screen.
  - It can cause injury to human, problem to product and damage the display.
- Do not put heavy objects on, or hang from, the product.
  - If the product collapses or is dropped, you may be injured.
- Do not touch the surface of the product if it overheats.
  - It can cause injury to human.
- Install the product firmly fixed on a floor, wall, etc. to prepare against external impact such as wind and earthquake.
  - You must refer to the manual provided.
- Prevent Children from climbing or hanging on the product.
  - If the product collapses or is dropped, you may be injured.
- Do not install it where there are heating devices such as electrical heaters or lighting equipment.
  - Fire, electrical shock, malfunction may occur.
- Do not install this product by yourself as you may injure yourself or cause damage to the product. Please contact service engineer authorised by service centre.
- Do not install this product on a wall if it could be exposed to oil or oil mist.
  - This may damage the product and cause it to fall.
- Do not leave the AC cable, signal cables, etc. in one's walking path.
  - This could cause a trip or fall, which could cause an electrical shock, fire, product breakdown, or injury.
- Do not let the product drop when connecting it to an external device connected with a short cable.
  - This may cause injury and damage to the product.
- If you drop the product or the case is broken, turn off the product and unplug the power cord and contact the service centre.
  - If you continue to use without taking proper measures, electrical shock or fire can occur.
- Install the product in a dry place where it is not near dust and water. Avoid high temperatures and humidity.
  - This may cause electrical shock, fire or product damage.
- Safely install the product in a place that can hold the weight of the product.
  - A lack of strength may cause the product to fall.
- Take a comfortable and natural position to relax the muscles when working with a product.
- A readily accessible disconnect device shall be incorporated external to the equipment. The maximum rating of an overcurrent protective device to be provided external to the equipment may be one of the protective device ratings available in the country of installation.

⚠ CAUTION

- Install the product where no Electromagnetic Interference occurs.
- If you install the product in a place that does not meet the recommended conditions, this may cause serious damage to the product's picture quality, life cycle, and appearance. Please check with service engineer before installing. Please do not install the product in places such as where there is an abundance of fine dust or oil mist, chemical substances are used, exposed to direct sunlight, the temperature is very high or low, the humidity is very high.
- Make sure the product is well ventilated by Installing at a distance (100 mm or more) from the wall.
  - If you install the product too close to the wall, it may be deformed or fire can break out due to internal heat buildup.
- When the AC cable is connected, make sure that the vents are not blocked by tablecloths, curtains, or other objects (such as plastic).
  - The product can be deformed or fire can break out due to overheating inside the product.
- Do not install the product in an area with poor ventilation (e.g. on a bookshelf, in a closet) or outside and avoid placing on cushions or carpets.
  - The product could catch fire due to overheating inside the product.
- Install the product on a flat and stable place that is large enough to support the product.
  - If the product is dropped, you may be injured or the product may be broken.
- When installing the product on a shelf or cabinet, make sure that the bottom end of the product is not protruding forward.
  - The product may fall due to unbalanced centre of gravity, which may cause personal injury or damage to the product. Be sure to use cabinets or shelves that fit your product.

Precautions for Using the Power Cable

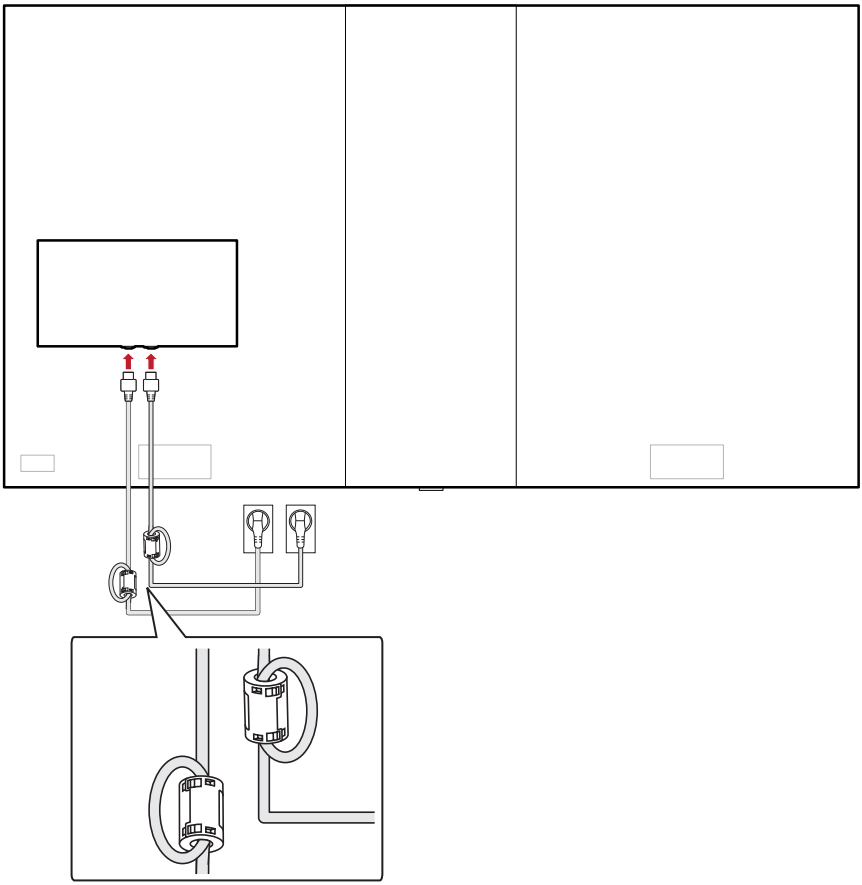

⚠ CAUTION

- Use the ferrite core to remove the power noise.
- Use the ferrite core to reduce the electromagnetic interference in the power cable.
- Wrap the power cable once on the ferrite core.
- Place the ferrite core close to the host product.

Precautions for Cleaning the Product

⚠ WARNING

- Keep the product clean at all times.
  - If you don't clean the unit for a long time and it becomes covered in dust, it can cause fire or product damage.
- When you need to clean the inside of the product, you must contact the service centre.
  - Otherwise, cleaning without support may cause a fire, electric shock, or damage to the product.
- When cleaning the product, disconnect the AC cable and wipe it gently with a soft cloth to prevent scratches.
  - An electric shock may occur or damage to the screen if its scratched.
- Do not physically come in contact with the screen of the LED Package.
  - This may cause damage to the product.
- To clean the product, use an air gun to lightly remove dust from the front frame and the screen.
  - If there are foreign substances in between the LEDs on the screen, it may cause a defect on the screen.

⚠ CAUTION

- When cleaning the product or the screen, unplug the power cord and wipe it gently with a soft cloth. Do not spray water or other liquids directly on the product. Especially, do not clean your product with chemicals including glass cleaner, any type of air freshener, insecticide, lubricants, wax (car, industrial), abrasive, thinner, benzene, alcohol, etc., which can damage the product or its panel.
  - This may result in fire, electric shock or product damage (deformation, corrosion or breakage).

Precautions for Using the Product

⚠ WARNING

- Do not use the product in any environment with excessively high temperatures or humidity.
  - It may cause electrical shock or damage the product.
- If you use the product for a long period of time, take a rest from time to time to protect your vision.
  - Extended viewing could result in impaired vision.
- Listening at high volume or using for a long time can cause damage to your hearing.
- If water or any foreign substance enters a unit, turn off the unit, disconnect it from the AC cable, and contact the service centre.
  - Otherwise, the product may cause fire or electric shock.
- In the event that no image appears on the screen or no sound is heard, stop using the product. Disconnect the AC cable from the power disconnecting device immediately and contact the service centre.
  - Otherwise, the product may cause fire or electric shock.
- Do not drop an object or impact on the product or screen.
  - It can cause injury to human, problem to product and damage the screen.
- If there is smoke or a strange sound or smell, disconnect the AC cable and contact the service centre.
  - If you continue to use the product without taking proper measures, it may cause electrical shock or fire.
- Do not attempt to disassemble, repair or modify the product yourself. Please contact service centre if you need to repair it.
  - Fire or electric shock can occur.
- Do not place objects filled with liquids such as vases, cups etc. on or over the product to prevent liquid from entering the product.
  - Failure to do so may result in fire, electric shock, malfunction or deformation.
- The product must be installed in an environment out of human reach. If a person touches the product, its performance may deteriorate. If the product needs to be installed in a place where human contact with the product is likely, a separate measure to prevent people from touching it needs to be taken.
- Do not push hard on or scratch the product's surface with your hands or sharp objects, such as nails, pencils or pens. Do not shock or scratch the front and sides of the screen with metallic objects.
  - This may damage the products and cause it to malfunction.
- Do not touch the product if it has been exposed to sunlight or an intense light because it could be hot.

- Do not use high voltage electrical goods near the product (e.g., a bug zapper).
  - This may result in product malfunction if it receives an electrical shock.
- If there is a gas leak, do not touch the outlet, and open the windows for ventilation.
  - Otherwise, the product may cause fire or electric shock.
- If the product or case is dropped and damaged, turn off the power and disconnect the AC cable.
  - If you continue to use without taking proper measures, electrical shock or fire can occur. Contact the service centre.
- Keep small accessories out of the reach of children.
  - If a child swallows it, consult a doctor immediately.
- Keep out of reach of children from the product. Also, do not throw toys or objects at the product or screen.
  - It can cause injury to human, problem to product and damage the screen.
- To shut off the power of the unit, you must disconnect all connected AC cables.

⚠ CAUTION

- This panel is an advanced product that contains millions of pixels. You may occasionally see pixel spots when viewing the screen. Since these deactivated pixels are not a defect, the performance and reliability of the product is not affected.
- Do not put or store inflammable substances near the product.
  - There is a danger of explosion or fire.
- Keep the proper distance from the product.
  - It can cause damage to your vision if you look at the product too closely.
- Set the appropriate resolution and frequency by products.
  - It can cause damage to your vision.
- Take a regular break when working with the product for a long time.

Precautions for Using the Remote control

⚠ WARNING

- Avoid places with high humidity.
  - It may cause electrical shock or damage the product.
- Do not expose batteries to excessive heat, such as direct sunlight, open fireplace, and electric heaters.
  - It may cause fire and you may be injured.
- Make sure that children do not swallow the remote control batteries when you replace them. Keep batteries out of reach of children.
  - If a child swallows a battery, consult a doctor immediately.
- Do not dispose of batteries in a fire.
  - Please dispose batteries at a local recycling centre or a retail store that handles batteries.
- Used batteries, which include rechargeable batteries, should be recycled separately from waste.
  - Please dispose used batteries and rechargeable batteries at a local recycling centre or a retail store that handles batteries.

⚠ CAUTION

- Do not short circuit and disassemble of batteries.
  - It may cause electrical shock or fire.
- The remote control may not function properly in sunlight or under a strong lamp. Move the product if it is being used in these conditions.
- Check if there is any obstacle between the product and the remote control.
- Do not mix new batteries with old batteries.
  - Overheating or leaking batteries may cause fire or electric shock.
- Only use the specified type of battery. Do not insert batteries that are not rechargeable into the charger.
  - Overheating or leaking batteries may cause fire or electric shock.

Product Disposal

- Do not dispose of this product with general household waste.
- Disposal of this product must be carried out in accordance to the regulations of your local authority.

ASSEMBLING AND PREPARING

⚠ CAUTION

- Always use genuine components to ensure safety and durability of the product.
- The product warranty will not cover damage or injury caused by the use of unauthorised components.

NOTE

- The accessories provided with your product may vary depending on the model or region.
- Product specifications or contents in this manual may be changed without prior notice due to upgrade of product functions.
- The warranty will not cover any damage caused by using the product in an excessively dusty environment.
- SuperSign Software & Manual
  - Visit *https://partner.lge.com* to download the latest SuperSign software and manual.

Optional Accessories

Without prior notice, optional accessories are subject to change to improve the performance of the product, and new accessories may be added. The illustrations in this manual may differ from the actual product and accessories.

Floor Stand	
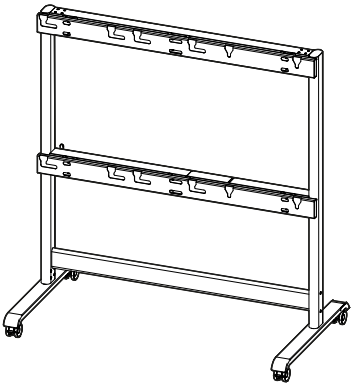	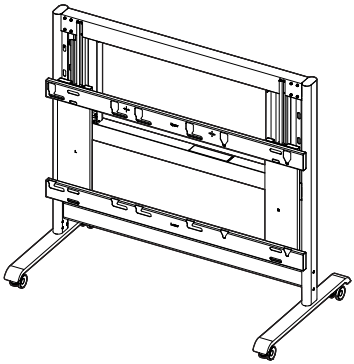
ST-136GF	ST-136GH

Leveling Tool

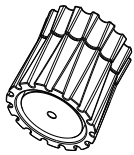

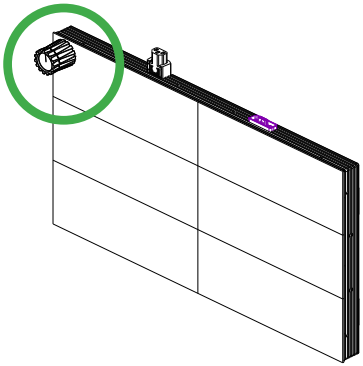

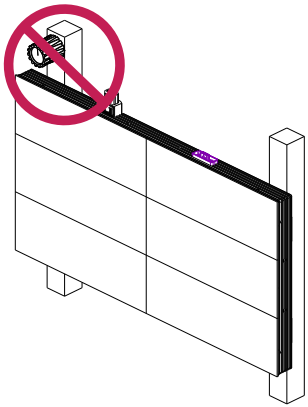

⚠ CAUTION

- Wear gloves and exercise caution for safety when using this accessory.
- Do not attach or use this accessory anywhere other than the designated leveling adjustment position on the product.

Handling for Protecting LED Package Screen

1 When taking out the product, make sure the screen is not pressed.

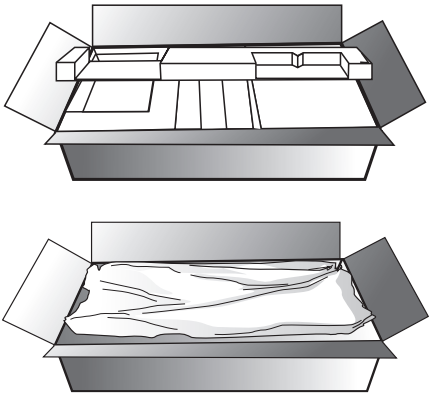

2 To stand the product upright, hold it on both sides so that the LED package screen does not touch the floor.

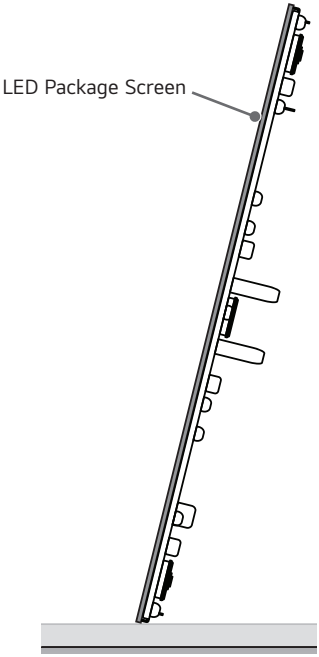

3 Place the product with the LED package screen facing down. To protect the screen, lay the protective pad in the box on the floor.

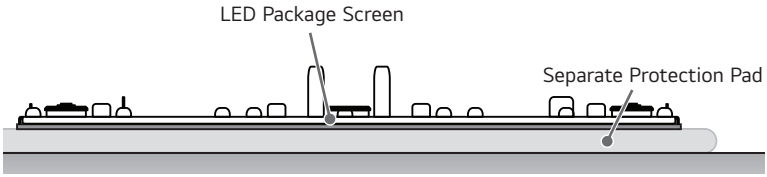

4 If you do not have a pad, make sure that there is no foreign object on the floor when you lay the product on the floor, and then carefully place the LED package screen facing down or up. Be careful not to drop objects on the LED package screen.

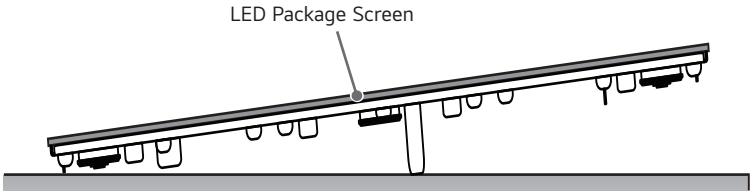

⚠ CAUTION

- If the product is tilted towards the LED package screen, the bottom of the product may be damaged.

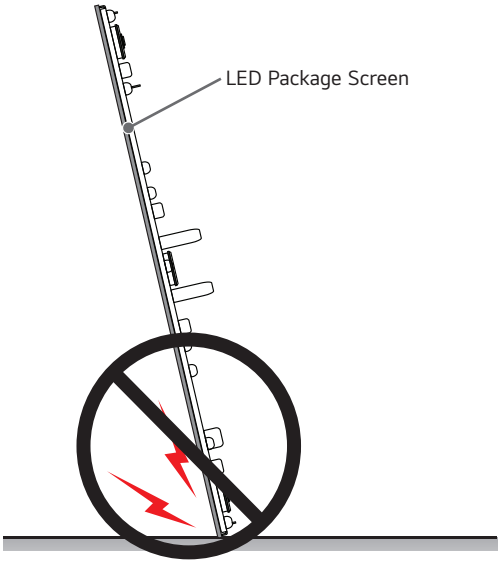

- If the product is tilted towards the edge of the LED package screen, the bottom (corner) of the product may be damaged.

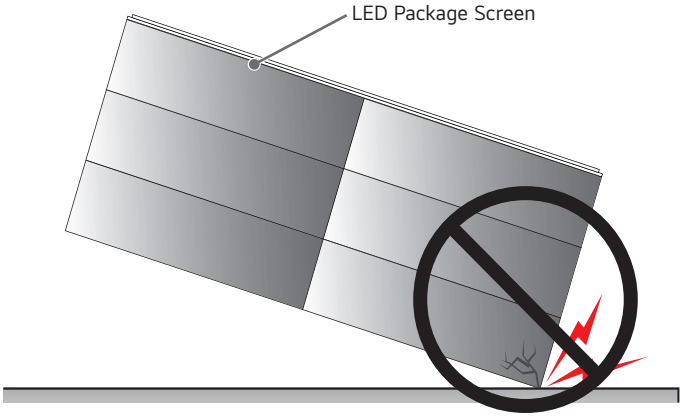

Installation Precautions Guide

Temperature

- Make a cooling system for the enclosure so that the operating temperature of the product can be maintained.
  - Product operating temperature: 0 °C to 40 °C (the recommended room temperature is below 25 °C.)
- Install in a location where the warm air from an air conditioner does not directly affect the product.
  - This will prevent malfunctions such as the screen turning off.

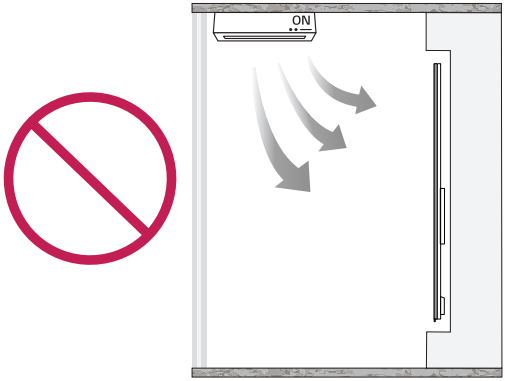

Direct Sunlight

- Install in a location that is not exposed to direct sunlight.
  - This will prevent the screen from appearing blurry due to light reflection.

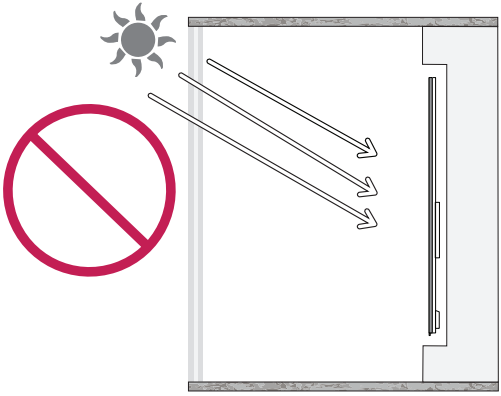

Installation Position

- Ensure the distance from the ceiling of the installation room to the product is at least 150 mm.
  - The high temperature air collected at the ceiling will naturally circulate to prevent malfunction.
- Ensure the distance from the floor of the installation room to the product is at least 100 mm.
  - The air from the floor will easily circulate to the ceiling to prevent malfunctions.

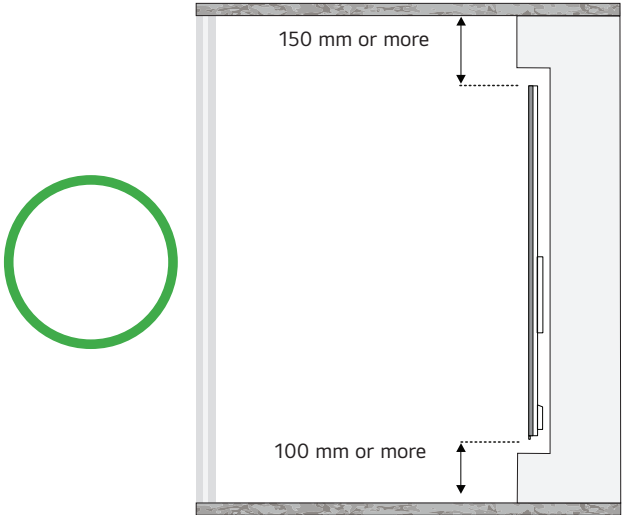

Installation Location

Installing on a Recessed Wall

- After installation on a recessed wall, a bezel can be installed for interior purposes.

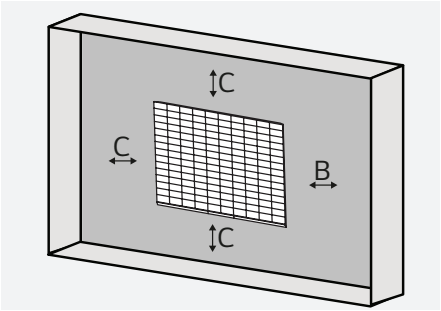

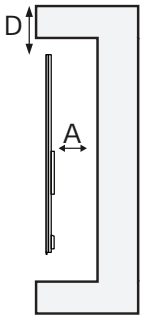

A : 43.5 mm or more
B : 30 mm or more
C : 100 mm or more
D : 150 mm or more

When Installing the Bezel

- Ensure it can be detached for product repair.
- For the top / bottom bezels, secure at least 50 % of the air vent to facilitate air circulation.
  - This will prevent malfunction.

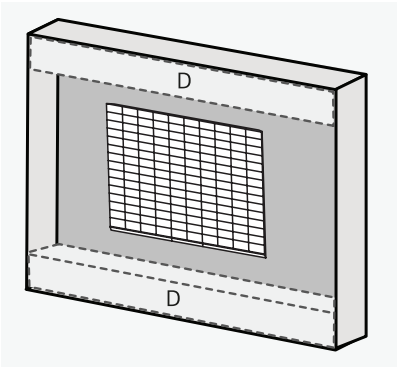

D : Air Vent
(50 % or more)

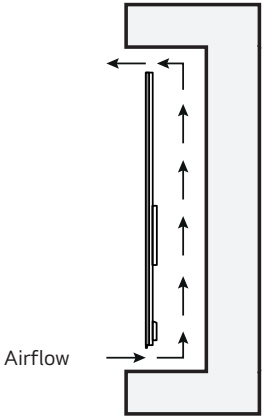

Installing on a Wall

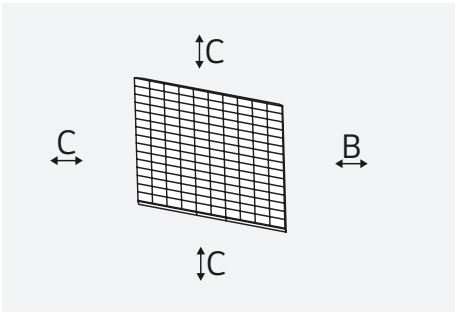



A : 43.5 mm or more
B : 30 mm or more
C : 100 mm or more

Buttons

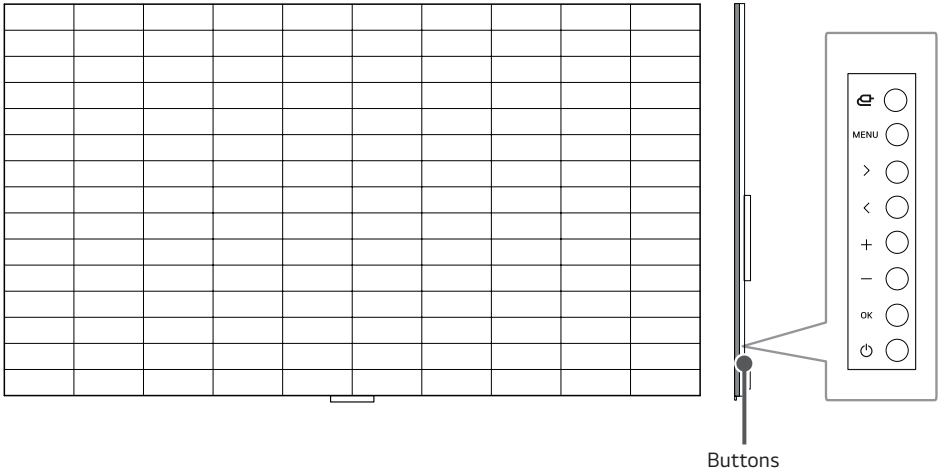

- : Changes the input source.
- **MENU** : Accesses the main menus, or saves your input and exits the menus.
- < > : Moves left and right.
- + − : Adjusts the volume level.
- OK : Press the button to select menu.
- : Turns the power on or off.

Terminal

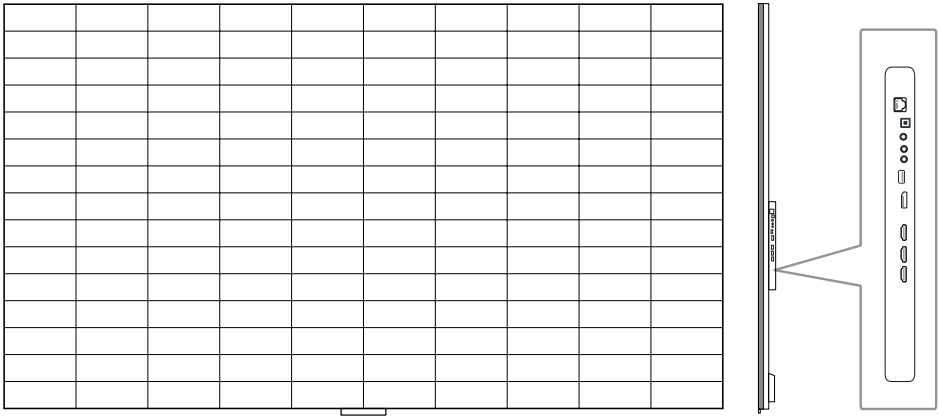

USING THE REMOTE CONTROL

Magic Remote

The descriptions in this manual are based on the buttons on the remote control. Please read this manual carefully to use the monitor correctly. To install batteries, open the battery cover, place batteries (1.5 V AA) matching ⊕ and ⊖ terminals to the labels inside the compartment, and close the battery cover. To remove the batteries, perform the installation actions in reverse. The illustrations may differ from the actual accessories.

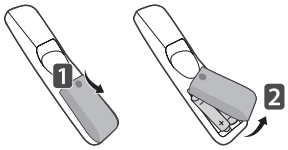

⚠ CAUTION

- Use the remote control within the specified range (within 10 m).

  You may experience communication failures when using the device outside the coverage area or if there are obstacles within the coverage area.
- You may experience communication failures depending on the accessories.

  Devices such as a microwave oven and wireless LAN operate in the same frequency band (2.4 GHz) as the Magic Remote. This may cause communication failures.
- The Magic Remote may not work properly if a wireless router (AP) is within 0.2 m of the monitor/LED Screen. Your wireless router should be more than 0.2 m away from the monitor/LED Screen.
- Do not disassemble or heat the batteries.
- Do not drop the battery. Avoid extreme shocks to the battery.
- Do not immerse the batteries in water.
- **Caution**: Risk of fire or explosion if the battery is replaced by an incorrect type.
- Properly dispose of used batteries.
- Inserting a battery in the wrong way may result in explosion.

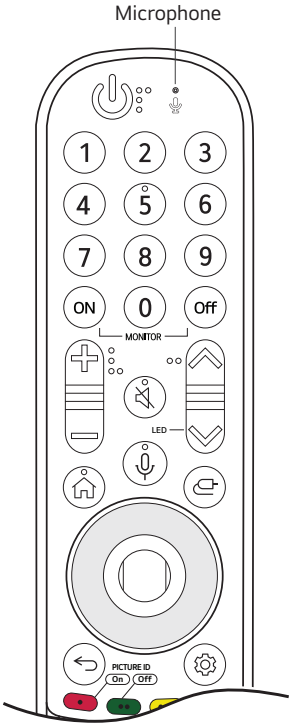

(Power) Turns the monitor on or off.

Number Buttons Use these buttons to enter a number.

MONITOR ON Turn on the monitor/LED Screen.

MONITOR OFF Turn off the monitor/LED Screen.

(Volume) Adjust the volume.

(Mute) Mutes all sounds.

(LED) Adjust the LED light.

(Home) Activate the launcher.

(Voice Recognition) The monitor/LED screen function can be used with voice recognition. (Currently not supported.)

(Input) Selects the input mode.

Wheel (OK) Press the scroll in the middle of the wheel to select a menu. The direction can be adjusted up and down by turning the wheel.

(Up/Down/Left/Right) Use these buttons to navigate the menu. Pressing the up, down, left, and right buttons while using the pointer will make the pointer disappear. To use the pointer again, shake the Magic Remote from side to side.

(Back) Go to the previous menu.

(Settings) Allows entry to the main menu and enables you to save and exit settings.



PICTURE ID ON/OFF When the video ID number and product ID number match, you can control the desired monitor/LED screen while multiple monitors/LED screens are connected.

ON : You can individually control as many as the number of set video IDs.

OFF : You can control all monitors/LED screens simultaneously.

FREEZE Freezes the screen of the external input video at the moment of key input. This is a LAEC/LAAA/LAAB-only function. (Functions may be turned off when switching to some apps. e.g. Other external input apps, Multi-Screen, DSMP, SI App, Player, etc.)

(Presentation Timer) A presentation timer can be set. (Time setting from 10 to 120 minutes)

(Office Meeting Mode) You can switch the Office Meeting Mode settings on or off.

W.BAL Enters the White Balance menu.

PSM Selects the Picture mode.

ARC Selects the screen size.

Register/Unregister the Magic Remote

- Turn on the Monitor/LED Screen and press the **Wheel (OK)** on the Magic remote for registration.
- Press and hold the **(Home)** button and **(Back)** button together for more than 5 seconds to disconnect the Magic Remote.
- Press and hold the **(Home)** button and **(Settings)** button together for more than 5 seconds to disconnect and re-register the Magic Remote at the same time.

Remote Control

The descriptions in this manual are based on the buttons on the remote control. Please read this manual carefully to use the monitor correctly.

To install batteries, open the battery cover, place batteries (1.5 V AAA) matching ⊕ and ⊖ terminals to the labels inside the compartment, and close the battery cover.

To remove the batteries, perform the installation actions in reverse. The illustrations may differ from the actual accessories.

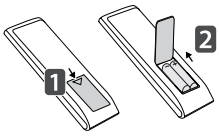

⚠ CAUTION

- Do not mix old and new batteries, as this may damage the remote control.
- Ensure the remote control is always pointed toward the monitor's IR receiver.
- Some features of the remote control may not be supported in certain models.
- The product's internal and external batteries should not be exposed to excessive heat such as direct sunlight, fire, or the like.

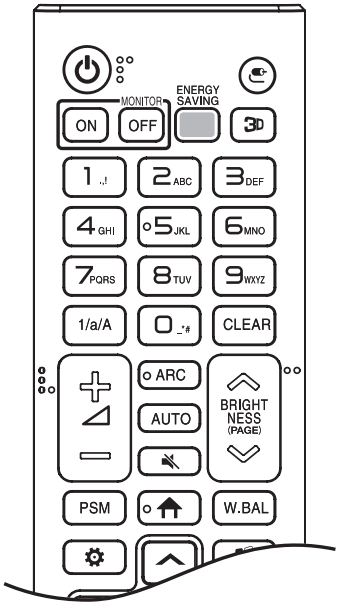

(Power) Turns the monitor on or off.

MONITOR ON Turns the monitor on.

MONITOR OFF Turns the monitor off.

ENERGY SAVING Reduces power consumption by adjusting peak screen brightness.

(Input) Selects the input mode.

3D Turns the display layout pattern on.

Number and Alphabet Buttons Enters numerical or alphabetical characters depending upon the setting.

1/a/A Toggles between numerical and alphabetical. (This function is not supported.)

CLEAR Deletes the entered numerical or alphabetical character.

(Volume Up/Down Button) Adjusts the volume level.

ARC Selects the screen size.

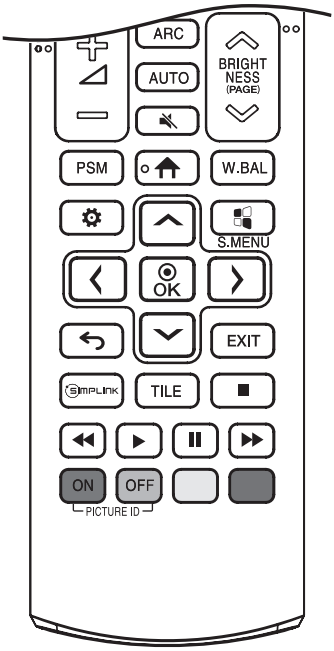

AUTO Automatically adjusts picture position and minimizes image instability. (This is supported only for the RGB input.)

(Mute) Mutes all sounds.

BRIGHTNESS Adjusts the LED light of the display.

(PAGE) Moves to the previous or next screen. (This function is not supported.)

PSM Selects the Picture Mode.

(Home) Activates the Launcher.

W.BAL Enters the White Balance menu.

(Settings) Accesses the main menus or saves your input and exit menus.

S.MENU Changes the display pattern in the order W → R → G → B → Front Align Pattern (Cross Pattern) with each press. Press once more to exit all patterns.

, OK After selecting the menu, select and adjust functions.

(Back) Returns to the previous level.

EXIT Closes the menu.

SIMPLINK Allows you to control various multimedia devices to enjoy multimedia simply by using the remote control through the SimpLink menu.

TILE You can choose to turn TILE Mode on/off.

(Control Buttons) Controls media playback. (This function is not supported.)

PICTURE ID ON/OFF When the Picture ID number matches the Set ID number, you can control whichever monitor you want in multi-display format.

- **ON**: Individually control the monitors with an image ID assigned to each of them.
- **OFF**: Control the monitors at once.

LG MAGNIT All-in-One
(LED SCREEN)

LAAB136BXNA

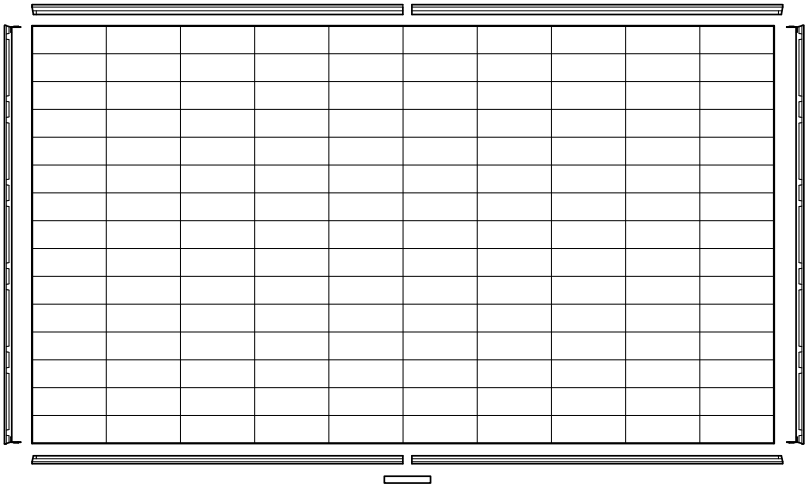



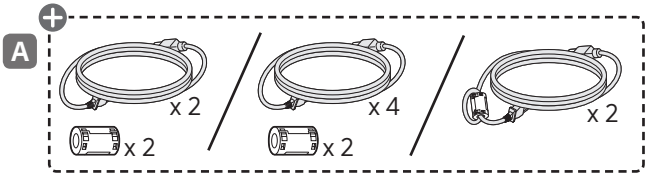

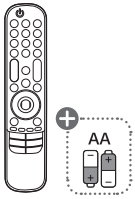





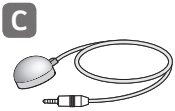

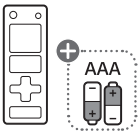

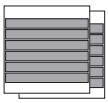

x 16
(M4 x L7)

x 4
(M4 x L14)

x 4
(M3 x L6)

x 50

x 12
(M4 x L10)

x 2
(M4 x L8)

x 50
(M3 x L8)

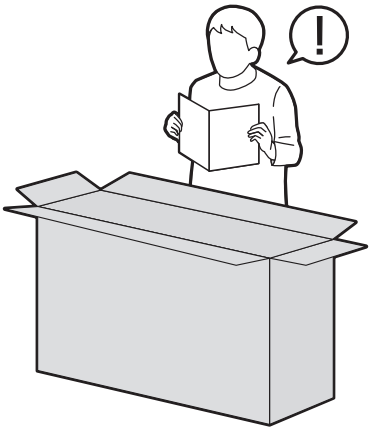

- Worldwide : www.lg.com/id-manual
- 한국 : www.lgservice.co.kr
- SuperSign : http://partner.lge.com

PDF

ENGLISH A readily accessible disconnect device shall be incorporated external to the equipment. The maximum rating of an overcurrent protective device to be provided external to the equipment may be one of the protective device ratings available in the country of installation.

한국어 쉽게 접근 가능한 전원 차단 장치가 옥내 배선에 설치되어 있어야 합니다.
기기 외부에 제공되는 과전류 보호 기기의 최대 정격은 설치 국가에서 이용할 수 있는 보호 기기 정격 중 하나 일수 있습니다.

ČESKY Na vnější straně zařízení má být zabudováno snadno přístupné odpojení přístroje.
Pro maximální jmenovitou hodnotu chrániče s nadproudovou ochranou, který má být umístěn vně zařízení, můžete použít jednu z jmenovitých hodnot ochranných zařízení dostupných v zemi, kde je zařízení instalováno.

DANSK En let tilgængelig afbryderanordning skal inkorporeres uden for udstyret.
Den maksimale kapacitet for en overstrømsbeskyttelse, der leveres separat fra udstyret, kan være en af de tilgængelige kapaciteter for beskyttelsesenheder i landet for installationen.

ESPAÑOL Los dispositivos de desconexión disponibles deberán incorporarse al equipo de forma externa.
El nominal máximo de un dispositivo de protección de sobrecorriente externo al equipo puede ser uno de los nominales de dispositivos protectores disponibles en el país de instalación.

SUOMI Helposti käytettävissä oleva irtikytkemislaite tulee liittää laitteeseen ulkoisesti.
Laitteeseen ulkoisesti liitetyn ylivirtasuojalaitteen enimmäisteho voi olla jokin asennusmaassa käytettävissä olevista suojalaitetehoista.

FRANÇAIS Un périphérique de déconnexion facilement accessible doit être installé à l'extérieur de l'équipement.
La valeur nominale de ce dispositif de protection contre les surintensités doit être conforme aux recommandations du pays d'installation.

DEUTSCH Eine leicht zugängliche Trennvorrichtung muss außerhalb des Geräts integriert werden.
Die maximale Nennleistung eines Überstromschutzgeräts außen am Gerät kann der vorgesehenen Schutzleistung des Landes entsprechen, in dem das Gerät installiert wird.

ΕΛΛΗΝΙΚΑ Στον εξοπλισμό μπορεί να συνδεθεί μια εξωτερική συσκευή με εύκολη πρόσβαση για αποσύνδεση.
Η μέγιστη ονομαστική ισχύς μιας προστατευτικής συσκευής από υπερένταση (παρέχεται ξεχωριστά) προς τον εξοπλισμό μπορεί να είναι η ισχύς μιας προστατευτικής συσκευής που διατίθεται στη χώρα της εγκατάστασης.

MAGYAR	Egy készen hozzáférhető leválasztóeszközt kell beépíteni a berendezésen kívül. A túlfeszültség ellen védő eszköz maximális besorolása, amelyet a berendezésen kívül kell biztosítani, lehet a védőeszköz egyik besorolása, amely a telepítés országában elérhető.
BAHASA INDONESIA	Perangkat pemutus yang siap diakses harus disertakan di luar peralatan. Peringkat maksimum perangkat pelindung arus berlebih yang akan diberikan di luar peralatan mungkin merupakan salah satu peringkat perangkat pelindung yang tersedia di negara pemasangan.
ITALIANO	All'esterno dell'apparecchiatura deve essere integrato un dispositivo di disconnessione facilmente accessibile. La classificazione massima di un dispositivo di protezione dalla sovracorrente fornito esternamente all'apparecchiatura può essere una delle classificazioni dei dispositivi di protezione disponibili nel paese di installazione.
ҚАЗАҚША	Оңай қолжетімді ажырату құрылғысы жабдыққа сырттай жалғануы керек. Жабдықтың сыртынан ұсынылатын артық қорғаныс құрылғысының максималды рейтингі орнату елінде қолжетімді қорғаныс құралдарының бірі болуы мүмкін.
NEDERLANDS	Een gemakkelijk toegankelijk apparaat om de verbinding te verbreken zal met de apparatuur worden meegeleverd. De maximale classificatie van een overstroombeveiligingsapparaat dat naast de apparatuur wordt geleverd, kan een beschermingsapparaat zijn dat beschikbaar is in het land van installatie.
NORSK	En enkelt tilgjengelig frakoblingsenhet blir innlemmet utenfor utstyret. Den maksimale raten for en beskyttelsesenhet mot overstrøm som skal medfølge utenfor utstyret kan være en av beskyttelsesenhetsratene tilgjengelig i landet der installasjonen foretas.
POLSKI	Sprzęt należy wyposażyć w łatwo dostępne, zewnętrzne urządzenie rozłączające. Maksymalne wartości znamionowe dla urządzenia chroniącego przed przepięciem, które należy zastosować, mogą odpowiadać wartościom znamionowym dla urządzeń tego typu dostępnych w kraju instalacji.
PORTUGUÊS	Um dispositivo de desligamento de fácil acesso deve ser incorporado de forma externa ao equipamento. A classificação máxima de um dispositivo de proteção contra picos de corrente a ser ligado externamente ao equipamento poderá ser uma das classificações disponíveis no país da instalação.
РУССКИЙ	С внешней стороны устройства должно быть установлено легкодоступное устройство отключения питания. Максимальное значение перегрузки по току внешнего защитного устройства должно соответствовать значению предусмотренному в стране установки устройства.

SLOVENČINA Mimo zariadenia sa musí nachádzať ľahko prístupné zariadenie na odpojenie od napájania.
Maximálne hodnotenie nadprúdového ochranného zariadenia, ktoré má byť dodané so zariadením, by malo byť jedno z hodnotení ochranného zariadenia v krajine inštalácie.

SVENSKA En lättillgänglig brytaranordning ska inkorporeras externt från utrustningen.
Den maximala klassificeringen av en överströmsskydd som ska tillhandahållas utanför utrustningen kan vara en av de klassificeringar för skyddsanordningar som finns tillgängliga i installationslandet.

繁體中文 應在設備外部安裝易於觸及的斷開裝置。
要在設備外部設置的過電流保護裝置的最大額定值可以是任一適用於安裝國家的保護裝置額定值。

TÜRKÇE Kolaylıkla erişilebilen bağlantı kesme cihazı, ekipmana harici olarak kurulmalıdır.
Ekipmana harici olarak dahil sağlanacak aşırı akım koruma cihazının maksimum derecesi, kurulum yapılan ülkedeki mevcut koruma cihazı derecelerinden biri olabilir.

УКРАЇНСЬКА На обладнанні повинен бути встановлений легкодоступний зовнішній пристрій відключення.
Максимальні номінальні характеристики захисного пристрою від надструму, який має бути встановлений зовні обладнання, можуть збігатися з номінальним значенням захисних пристроїв, доступних у країні встановлення.

O'ZBEKCHA Chiqarib olish oson bo'lgan qurilmalar uskunaga tashqi tomondan ulangan bo'lishi lozim.
Uskunaga tashqi tomondan taqdim etiladigan yuqori kuchlanishdan himoyalovchi qurilmaning maksimal reytingi o'rnatiladigan mamlakatdagi himoya qurilmasi reytinglaridan biri bo'lishi mumkin.

日本語 すぐに操作できる断路機を外部に設置する必要があります。
機器の外部に設置する過電流保護装置の最大定格は、設置国で利用可能な保護装置の定格の1つである場合があります。

ქართული შესაძლებელია მზა წვდომადი გამთიშველი მოწყობილობის აღჭურვილობის გარედან ჩაშენება.
ჭარბი დენისაგან დამცველი მოწყობილობის მაქსიმალური შეფასება, რომელიც აღჭურვილობის გარე ნაწილზე უნდა იყოს დატანილი, შესაძლოა ქვეყანაში მონტაჟის ხელმისაწვდომ დამცავ მოწყობილობათა შეფასებებიდან ერთ-ერთს წარმოადგენდეს.

العربية يجب إرفاق جهاز فصل يسهل الوصول إليه خارج المعدات.
قد يكون أقصى تصنيف لجهاز حماية من التيار الزائد يتم توفيره خارج المعدات هو أحد تصنيفات جهاز الحماية المتوفرة في بلد التركيب.

Estonian	Seadme väliselt tuleb inkorporeerida hõlpsalt ligipääsetav eraldamisseade. Seadme väliselt saadaoleva liigvoolu kaitseseadme maksimaalne nimivõimsus võib olla kaitseseadme võimsus, mis on saadaval paigaldusriigis.
Latvian	Aprīkojuma ārpusē jābūt viegli pieejamai atvienošanas ierīcei. Pārstrāvas aizsargierīces (kurai jābūt pieejamai ārpus aprīkojuma) nominālajiem parametriem jāatbilst tās valsts normatīvajiem parametriem, kurā tiek uzstādīts aprīkojums.
Lithuanian	Į įrangą iš išorės integruojamas paprastai prieinamas atjungiamas prietaisas. Apsaugos nuo viršsrovio prietaiso, kuris turi būti iš išorės jungiamas prie įrangos, maksimali galia turi būti viena iš įrengimo šalyje naudojamų leistinų apsauginiams prietaisams galių.
Romanian	Un dispozitiv de deconectare gata disponibil va fi încorporat în exteriorul echipamentului. Valoarea nominală maximă a unui dispozitiv de protecție la supracurent de furnizat în exteriorul echipamentului poate fi una dintre valorile nominale ale dispozitivului de protecție, disponibile în țara de instalare.
PORTUGUÊS DO BRASIL	Um dispositivo de desconexão de fácil acesso deve ser integrado externamente ao equipamento. A classificação máxima de um dispositivo de proteção contra sobrecorrente que será fornecido externamente ao equipamento pode ter uma das classificações do dispositivo de proteção disponíveis no país de instalação.



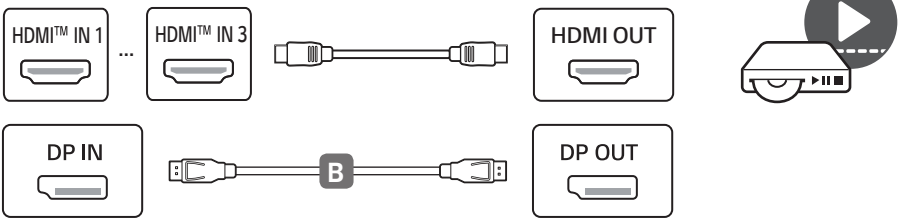
HDMI™ IN 1
...
HDMI™ IN 3
HDMI OUT
DP IN
B
DP OUT

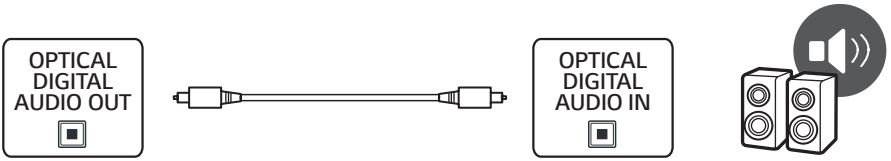
OPTICAL DIGITAL AUDIO OUT
OPTICAL DIGITAL AUDIO IN

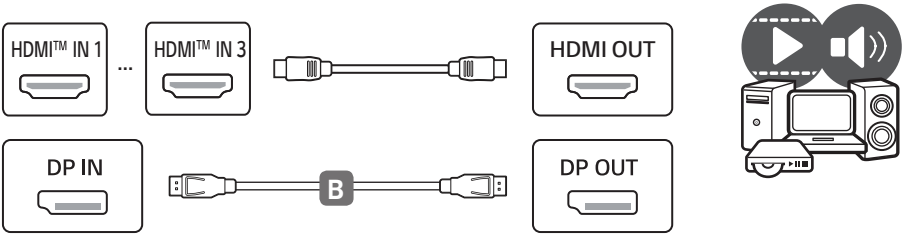
HDMI™ IN 1
...
HDMI™ IN 3
HDMI OUT
DP IN
B
DP OUT

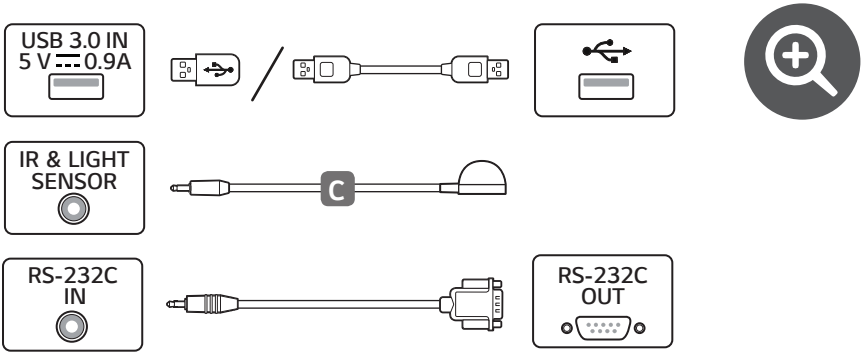
USB 3.0 IN
5 V 0.9A
IR & LIGHT SENSOR
C
RS-232C IN
RS-232C OUT
RS-232C OUT
RS-232C IN
LAN IN



1

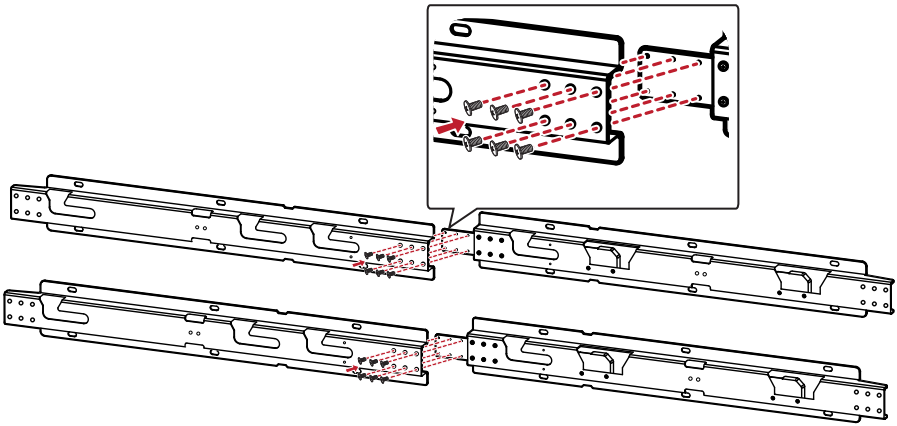

2

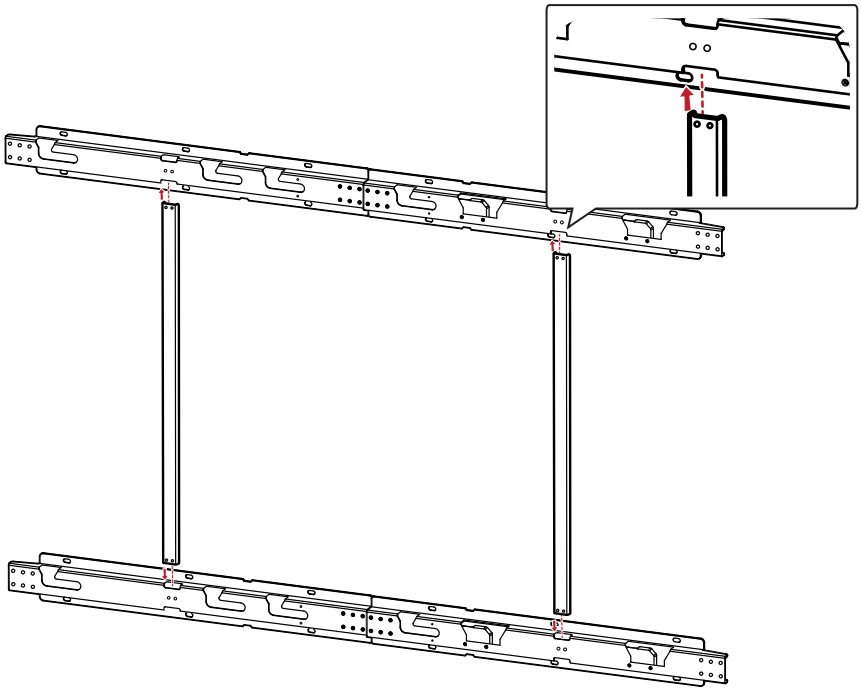

3

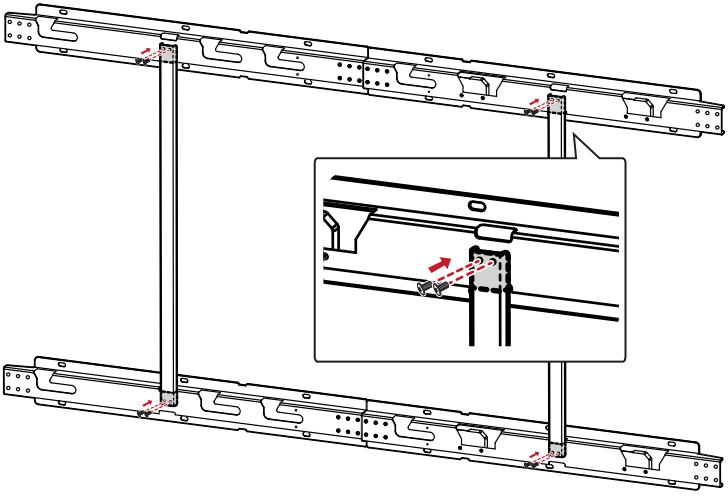

4

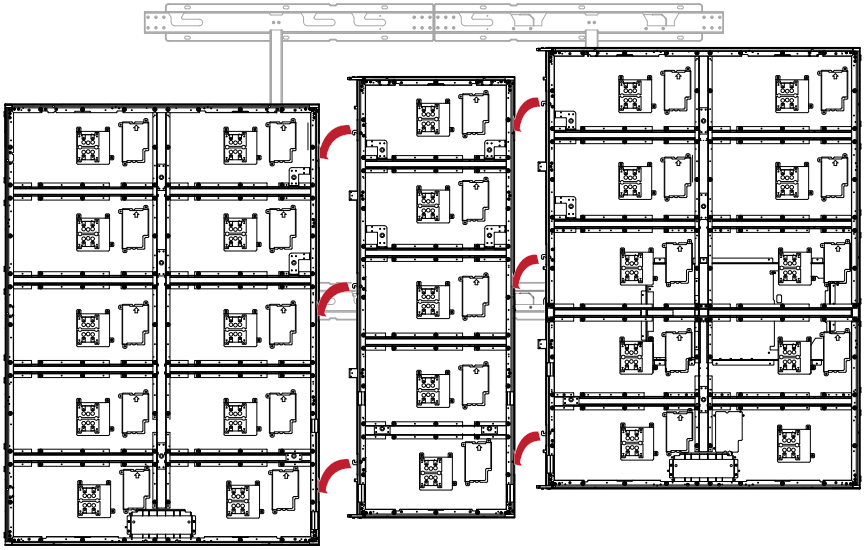

5

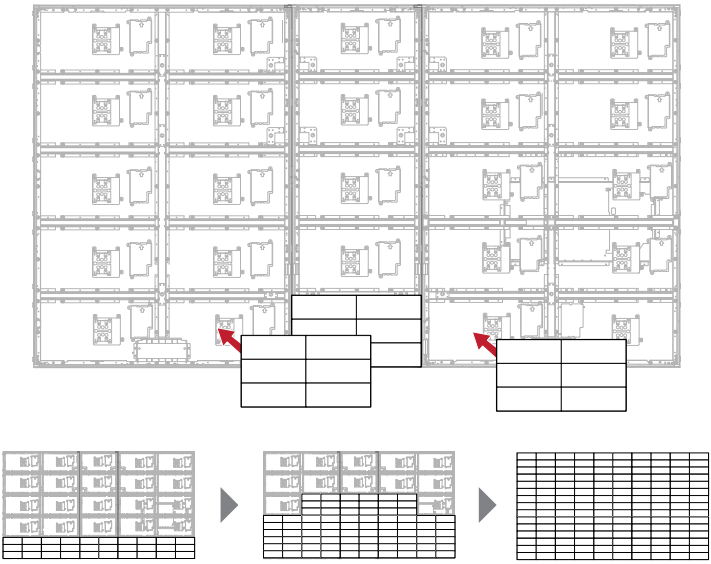

6

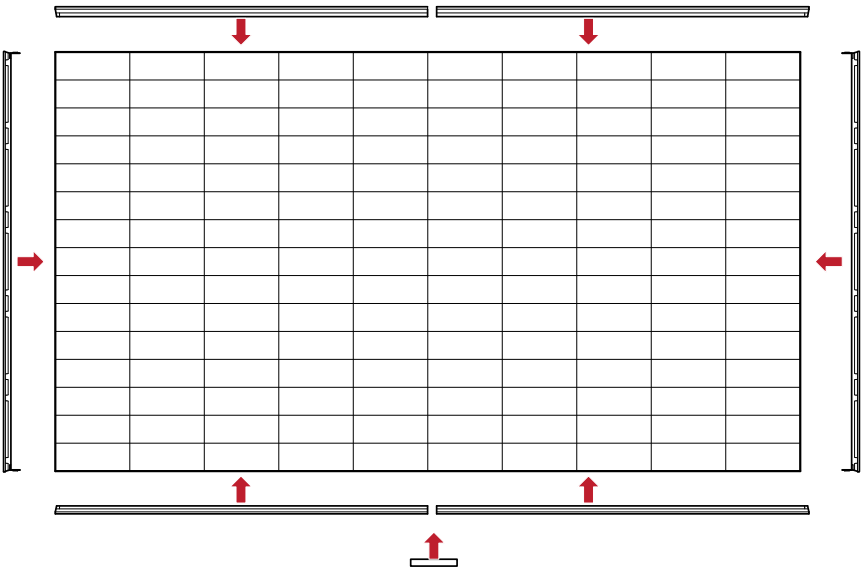



7

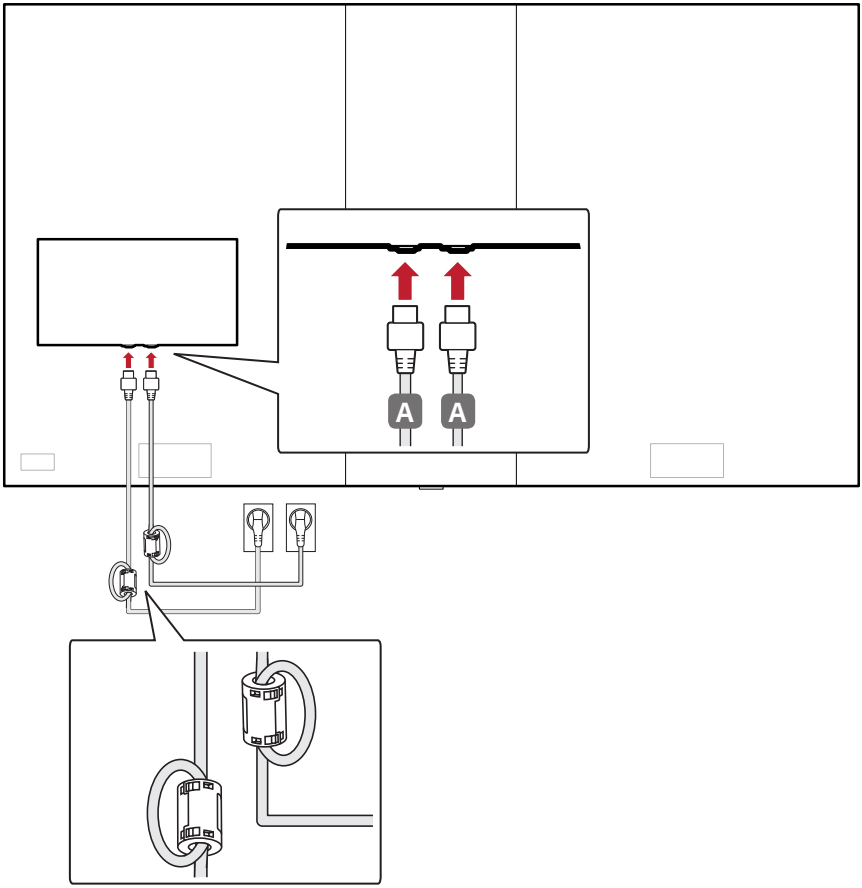
A
A



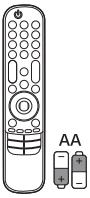

1

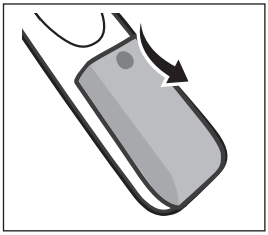

2

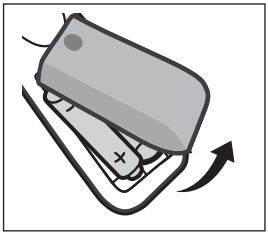

3

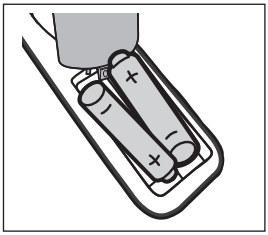

4

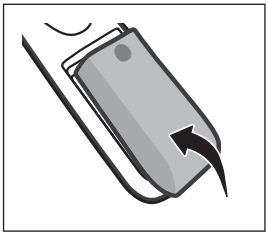

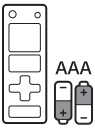

1

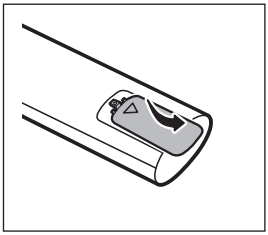

2

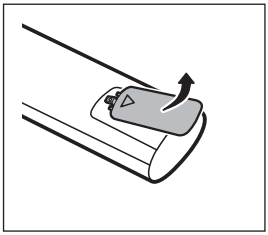

3

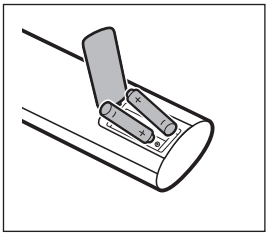

4

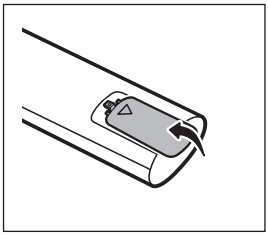

(BRAZIL ONLY)

ANATEL

Para mais informações, consulte o site da Anatel: https://www.gov.br/anatel/pt-br

Este equipamento não tem direito à proteção contra interferência prejudicial e não pode causar interferência em sistemas devidamente autorizados

To obtain the source code that is contained in this product, under GPL, LGPL, MPL, and other open source licenses that have the obligation to disclose source code, and to access all referred license terms, copyright notices and other relevant documents, please visit *https://opensource.lge.com*.

LG Electronics will also provide open source code to you on CD-ROM for a charge covering the cost of performing such distribution (such as the cost of media, shipping, and handling) upon email request to *opensource@lge.com*.

This offer is valid to anyone in receipt of this information for a period of three years after our last shipment of this product.

NOTE

- Software-related content may be changed without prior notice due to upgrades of the product functions.
- Some features described in the User Manual may not be supported in certain models and countries.
- Some submenus of each function may not be supported depending on the model.
- SNMP 2.0 is supported.

SETTINGS

Home

Global Buttons

CEAA, CEAB, CEAC, LAAB

- [Input]: Navigate to the external input selection screen
- [Setting]: Navigate to the Settings screen

Dashboard

CEAA, CEAB, CEAC, LAAB

- This feature displays key information about your Signage monitor in the center of the home screen. In the Dashboard, you can manually change settings by selecting the corresponding items.
- [Manual Download]: Downloads a manual by scanning a QR code.

NOTE

- If the dashboard is locked, the focus does not move.
- Some QR code apps on mobile devices may not work. (You can access the page to download manuals by visiting the provided address.)

[Content Manager]

CEAA, CEAB, CEAC, LAAB

- [Player]: Play a variety of content including images, videos, and SuperSign content.
- [Scheduler]: Manage schedules for content that will be played at different times.
- [Editor]: You can create your own content using templates and media files.

[Gallery Mode]

CEAA, CEAB, CEAC, LAAB

- This mode allows you to appreciate the natural environment and famous paintings.

Ez Setting

[Video Wall]

SETTINGS / ⚙ → [Ez Setting] → [Video Wall]

Set Video Wall options to create a wide visual canvas.

- [Tile Mode]: Turn [Tile Mode] on or off.
- [Tile Mode Setting]: Display a single integrated screen on multiple Signage monitors.
- [Simple Configuration]: Automatically sets [Tile ID] based on the connection direction of the set RS232C.
  - When the [Set ID] of the connected set is complete, the performance of [Simple Configuration] is guaranteed only for the master set ([Set ID] 1).
    Run this function for the master set ([Set ID] 1).
- [Natural Mode]: Display the image excluding the area that overlaps with the monitor's bezel so that the image displayed has a more natural feel to it.
- [Frame Control]: Adjust the sets that run [Scan Inversion] and frame deviation.
  - When running [Scan Inversion], please run [Frame Control] for the sets that do not run [Scan Inversion].
- [Scan Inversion]: Reduce screen deviation between adjoining video walls by changing screen scanning method.
- [White Balance]: Configure white balance settings (White Pattern, R/G/B-Gain, and Luminance).
- [Reset]: Reset to initial settings.
- [Reboot to Apply]: Reboot the set to configure a changed Frame Control/Scan Inversion value.

NOTE

- When Tile Mode is enabled, automatically set [Frame Control] for odd numbered rows and [Scan Inversion] for even numbered rows.

[On/Off Scheduler]

CEAA, CEAB, CEAC, LAAB

SETTINGS / ⚙ → [Ez Setting] → [On/Off Scheduler]

Set a schedule to use your signage by time and day of the week.

- [On/Off Time Setting]: Set on/off times for each day of the week.
- [Holiday Setting]: Set holidays by date and by day of the week.

[SI Server Setting]

CEAA, CEAB, CEAC, LAAB

SETTINGS / ⚙ → [Ez Setting] → [SI Server Setting] → [SI Server Setting]

Set up to connect your signage to an external SI server. Set up a server environment for SI app installation.

SETTINGS / ⚙ → [Ez Setting] → [SI Server Setting] → [Developer Mode & Beanviser]

This feature provides great convenience to the app developers.

Set up to install and activate the Developer mode and Beanviser app.

NOTE

- To use these features, an account (ID/PASSWORD) for webOS Signage developer website (*http://webossignage.developer.lge.com/*) is required.

[Server Setting]

CEAA, CEAB, CEAC, LAAB

SETTINGS / ⚙ → [Ez Setting] → [Server Setting]

Set up to connect your signage to a SuperSign server.

- CMS Server
- Control Server (CEAA, CEAB, CEAC model is not supported.)

[Fail Over]

CEAA, CEAB, CEAC, LAAB

SETTINGS / ⚙ → [Ez Setting] → [Fail Over]

Set the priority of the input devices when a fault occurs. Automatically play the content stored in the device or run the set app.

- [On/Off]: Turns [Fail Over] on or off.
- [Auto Switching]: Automatically switches to an input device with a valid signal when the device is connected. If there is no input signal or the app is closed, it automatically switches to the most recently used external input or app. Apps supporting automatic switching, other than external inputs, include SuperSign content, SI app, and Play via URL. (CEAA, CEAB, CEAC model is not supported.)
  - [On]: Turns on the [Auto Switching] feature. If a valid signal is already connected when [On] is selected or when the power is turned on, the input device is included in the usage history. When multiple input devices are connected, the usage history is defined in a random order.
  - [Off]: Resets the history of recently used external inputs or apps and will not switch automatically, even if an input device is connected. Performs the same action as [Off], even when the menu is disabled or the power is off. Enables the [Input Priority], [Action Mode], and [Play Backup Content] items.
- [Input Priority]: Set the priority of input sources for fail over.
- [Action Mode]: Choose whether to revert to a higher priority input mode or maintain the current one when there is no failure. (CEAA, CEAB, CEAC model is not supported.)
  - [Return]: Automatically switches to the highest priority input mode with a valid signal if multiple input devices are connected simultaneously.
  - [Hold]: Maintains the current input mode if there is no failure.
- [Play Backup Content]: When there is no input signal, this feature automatically plays the content stored in the device or runs the set app. When set to [On], [Auto Capture Images], [Media Storage], [SuperSign Contents], and [SI App] / [Play via URL] items are activated.
  - [Auto Capture Images]: When the automatic input switches due to taking screenshots of an image or video that is playing at regular intervals, this feature will play back the file.
    -> Capture time Interval: The time interval can be set to 30 min, 1 hour, 2 hours and 3 hours.
  - [Media Storage]: When the automatic input switches due to the image and video file being uploaded, the feature will play back the file.
    -> [Backup Media Select]: Using the settings button, you can upload a single file in the internal / external memory.
    -> [Preview]: You can preview the uploaded file.
  - [SuperSign Contents]: When the automatic input switches, this feature will play the file(s) distributed in SuperSign CMS.
  - [SI App] / [Play via URL]: Run SI App or Play via URL when automatic input switch occurs.
    -> [SI App]: SI App behavior depends on the settings from [SI Server Setting] menu in [Ez Setting].
    -> [Play via URL]: Play via URL behavior depends on the settings from [Play via URL] menu in [Ez Setting].
    -> If both [Play via URL] and [SI Server Setting] can be run, it runs [Play via URL] when automatic input switch occurs.
- [Reset]: Reset to initial settings.

NOTE

- If multiple input devices are connected simultaneously, the input device switches automatically to the one with the highest priority among the devices with valid signal, even if a failure does not occur. (CEAA, CEAB, CEAC model)
- When the [Auto Switching] feature is enabled, changes in input mode are recorded in the usage history only if they occur through [Auto Switching]. When the input mode is manually changed, it is not recorded in the usage history.

[Status Mailing]

CEAA, CEAB, CEAC, LAAB

SETTINGS / ⚙ → [Ez Setting] → [Status Mailing]

This feature configures the system so that the status of the device is assessed and then notified to the administrator by e-mail.

- [On/Off]: Turns [Status Mailing] on or off.
- [Mailing Option]: Sets [Scheduled Mailing] or [When Failure Status].
- [User E-mail Address]: Set the user email address of the sender.
- [Sending Server(SMTP)]: Set the address of the SMTP server.
- [ID]: Enter the account ID of the sender.
- [Password]: Enter the password for the sender's account.
- [Receiver E-mail Address]: Set the email address of the recipient.
- [Send message]: Immediately assess the status of the device and deliver the information to the specified email address.
- [Reset]: Reset to initial settings.

NOTE

- If the status regarding any of the following items changes or becomes abnormal, a status message can be sent.
  - 1. Temp. Sensor: If the set reaches a dangerous temperature, its current temperature is recorded, and an email containing such information is sent.
  - 2. Temp. Sensor Validation: An email is sent if there is no temperature sensor connected, if the communication status of the temperature sensor is unknown, or if the information provided by the chip provider is abnormal.
  - 3. LAN Status, WiFi Status: An email is sent when the network's connection status is changed. The maximum number of network status changes that can be saved is limited to 50. The saved value is reset once the power turns off.
  - 4. No Signal Check: Checks whether there is a signal. If there are no signals for more than 10 seconds, an email is sent.
  - 5. Schedule Play Status: An email is sent if content cannot be played between the scheduled start time and end time in either Content Management Schedule status or SuperSign Content status. However, this does not apply when terminated using the remote control.
  - 6. Fail Over Status: An email is sent in case of failure or automatic switch to the input device with the highest priority. (Input switches by the user (RC, RS232C, SuperSign) are excepted.)
  - 7. Motion Detection Status: When the product detects movement or shock caused by the external environment, an e-mail is sent to you.

- Only SMTP ports 25, 465, and 587 are supported.
- The occurrence of internal input switches, excluding external input switches (RC, RS232C, SuperSign), are considered as Fail Over Status.
- One email containing the "Failover status: Failover" message is sent when switching to Fail Over Status, and the following status emails sent regularly or upon status changes contain the message "Failover status: None".

[Play via URL]

CEAA, CEAB, CEAC, LAAB

SETTINGS / ⚙ → [Ez Setting] → [Play via URL]

Play content you want to play automatically through the built-in web browser.

- [URL Loader]: Turns [Play via URL] on or off.
- [Set URL]: Enter the URL address to display automatically.
- [Preview]: Preview your desired website by accessing the specified URL.
- [Save]: Save the specified URL.
- [Reboot to Apply]: Restarts the monitor set after saving the specified URL.
- [Reset]: Reset to initial settings.

NOTE

- If [Time & Date] is not set to [Set Automatically], website navigation may be difficult.
  - **SETTINGS /** ⚙ → Check [General] → [Time & Date] → [Set Automatically]

[Setting Data Cloning]

CEAA, CEAB, CEAC, LAAB

SETTINGS / ⚙ → [Ez Setting] → [Settings Data Cloning]

This feature is used to copy and import the settings of the device to other devices.

- [Export Setting Data]: Export the settings of the device to another device.
- [Import Setting Data]: Import the settings of another device into the device.

NOTE

- You must enter an admin password to use this feature.

[Sync Mode]

CEAA, CEAB, CEAC, LAAB

SETTINGS / ⚙ → [Ez Setting] → [Sync Mode]

Sync up time and content among multiple signage.

- [RS-232C Sync]: Sync up multiple signage connected by RS-232C.
- [Backlight Sync]: Shares values to control backlights using illumination sensors between devices connected by RS-232C. (CEAA, CEAB, CEAC model is not supported.)
- [Network Content Sync]: Sync up multiple signage connected to the same network. (CEAA, CEAB, CEAC model is not supported.)

[Multi Screen]

CEAA, CEAB, CEAC, LAAB

SETTINGS / ⚙ → [Ez Setting] → [Multi Screen]

This feature allows you to view multiple external inputs and videos on a single screen.

PIP Mode	PBP Mode
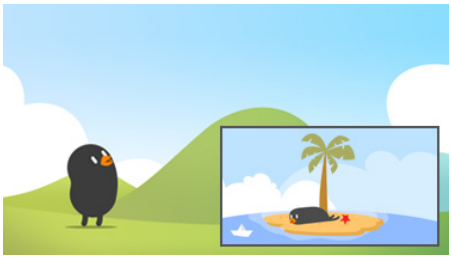	
3-Screen Split Mode	**4-Screen Split Mode**
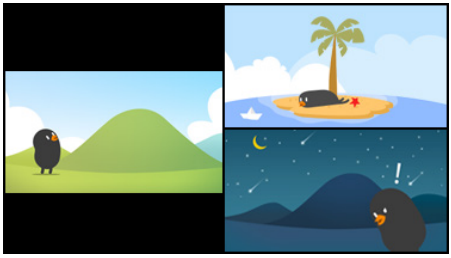	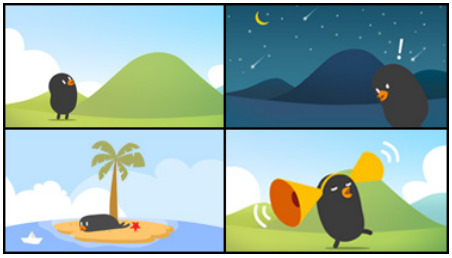

NOTE

- In multi-screen mode, the DP daisy chain feature is not supported.
- The number of split screens you can have may vary depending on the model.

Selecting Screen Layout

When you enter multi-screen mode without having set any screen layout, the screen layout selection menu appears. When the screen layout selection menu is not displayed on the screen, go to the screen layout menu bar by pressing the up arrow key on your remote control and select your desired screen layout.

Closing Screen Layout Menu

From the screen layout menu, press the up arrow key on the remote control to go to the screen layout menu bar and select it or press the back key to close the screen layout menu.

Changing Screen Input

Press the button on the top right of each split screen to select the desired input.

NOTE

- Inputs which have already been selected for other split screens cannot be selected again. To select them, press the RESET button to reset the inputs for all screens first.
- In the PIP mode, supported resolutions for subscreen are as follows: Other resolutions are not supported.
  - 1680 x 1050 / 1920 x 1080
- This applies to External Input.
- Models with 4-screen split mode support external input resolution of 3840 x 2160 on PIP Sub screens.

General

[Language]

CEAA, CEAB, CEAC, LAAB

SETTINGS / ⚙ → [General] → [Language]

You can select the menu language to be displayed on the screen.

- [Menu Language]: Sets the language of your Signage monitor.
- [Keyboard Languages]: Sets the language of the keyboard displayed on the screen.

[System Information]

CEAA, CEAB, CEAC, LAAB

SETTINGS / ⚙ → [General] → [System Information]

This feature displays information such as the device name, software version, and storage space.

[Set ID]

CEAA, CEAB, CEAC, LAAB

SETTINGS / ⚙ → [General] → [Set ID]

- [Set ID] (1~1000): Assigns a unique Set ID number to each product when several products are connected via RS-232C. Assign numbers ranging from 1 to 1000 and exit the option. You can control each product separately by using the Set ID you assigned to each product.
- [Auto Set ID]: Automatically assigns a unique Set ID number to each product when several products are connected for display.
- [Reset Set ID]: Reset the Set ID of the product to 1.

[Time & Date]

CEAA, CEAB, CEAC, LAAB

SETTINGS / ⚙ → [General] → [Time & Date]

This feature enables you to view and change the time and date on the device.

- [Set Automatically]: Set [Time] and [Date].
- [Daylight Saving Time]: Set the start and end times for Daylight Saving Time. The DST start/end times function only when you set them more than one day apart from each other.
- [NTP Server Setting]: Allows you to set other NTP servers other than the basic NTP server.
- [Time Zone]: Allows you to change the time zone based on continent, country/region, city or user settings.

[Power]

CEAA, CEAB, CEAC, LAAB

SETTINGS / ⚙ → [General] → [Power]

Power-related feature settings

[No Signal Power Off (15 Min)]

Set whether to use the 15 Min Auto Off feature.

- You can set this option to [On] or [Off].
- If you set this feature to [On], the product turns off after it's remained in No Signal status for 15 minutes.
- If you set this feature to [Off], the 15 Min Force Off feature is disabled.
- It is recommended that you set this feature to [Off] if you intend to use the product for long periods of time as the feature turns the power of the product off.

[No IR Power Off (4 hour)]

Set whether to use 4 Hours Off feature.

- You can set this option to [On] or [Off].
- If you set this feature to [On] the product turns off if there is no input from the remote control for 4 hours.
- If you set this feature to [Off], the 4 Hours Off feature is disabled.
- It is recommended that you set this feature to [Off] if you intend to use the product for long periods of time as the feature turns the power of the product off.

[DPM] / [DPM (Standby Mode)]

Set the Display Power Management (DPM) mode.

- If this feature is not set to [Off], the monitor will enter DPM mode when there is no input signal.
- If you set this feature to [Off], [DPM] / [DPM (Standby Mode)] is disabled.

NOTE

- For some LED models, when [PM Mode] is set to [Power Off (Default)], the Energy Saving mode remains enabled even when there is an input signal.

[DPM Wake Up Control] / [DPM (Standby Mode) Wake Up Control]

Turns on the set according to the digital signal processing of the connected DVI-D/HDMI port.

- When set to [Clock], the set only checks for digital clock signals and turns on once it finds the clock signal.
- When set to [Clock+DATA], the set turns on if the digital clock and data signals are both input.

[PM Mode]

- [Power Off (Default)]: Set the normal DC off mode.
- [Screen Off Always]: Switches to [Screen Off] status when entering DPM, Auto Power Off (15 min, 4 hours) or Off Time Scheduling mode, or when there is input from the remote control's Power button or the monitor's Off button.
- [Network Ready]: Monitor is turned off, but you can control power internally through the network.

NOTE

- In order for the screen to switch from [Screen Off] to On status, there must be input from the remote control's Power or Input button, or the monitor's On button.

[Power On Delay](0-250)

- This feature prevents overload by implementing a power-on delay when multiple monitor sets turn on.
- You can set the delay interval in the range of 0 to 250 seconds.

[Power On Status]

- Select the operating status of the monitor when the main power has turned on.
- You can choose from among [PWR(Power On)], [STD(Standby)] and [LST(Last Status)].
- [PWR(Power On)] keep the monitor powered on when the main power has turned on.
- [STD(Standby)] switch the monitor to Standby status when the main power has turned on.
- [LST(Last Status)] switches the monitor back to its previous status.

[Wake On LAN] / [Wake On LAN (Networked Standby Mode)]

- Set whether to use [Wake On LAN] / [Wake On LAN (Networked Standby Mode)].
- You can set the feature to On or Off for each wired/wireless network.
- [Wired]: When set to [On], the [Wake On LAN] / [Wake On LAN (Networked Standby Mode)] feature is enabled, letting you turn the product on remotely through a wired network.
- [Wireless]: When set to [On], the [Wake On LAN] / [Wake On LAN (Networked Standby Mode)] feature is enabled, letting you turn the product on remotely through a wireless network.

[Power On/Off History]

Display the device's power on/off history.

[Quick Start+]

This setting puts your monitor in standby mode when it's turned off so it will help using monitor's functions quicker when you turn the monitor back on.

- Some models may not be supported.
- Turning this option on may increase energy consumption.

[Network]

CEAA, CEAB, CEAC, LAAB

SETTINGS / ⚙ → [General] → [Network] → [Network Settings]

[Wired Connection (Ethernet)]

- Wired Connection: Connects the monitor to a local area network (LAN) via the LAN port and configures wired network settings. Only wired network connections are supported. After setting up a physical connection, the display will automatically connect without any adjustments on most networks. A small number of networks may require the display settings to be adjusted. For detailed information, contact your Internet provider or consult your router manual.
- 802.1X EAP: Authentication based on IEEE 802.1X is available for wired connection. Select the desired EAP type and Phase 2 Authentication, enter the ID/Password registered with the authentication server, and press the CONNECT button to attempt the connection.

[Wi-Fi Connection]

(CEAA, CEAB, CEAC model is not supported.)

If you have set your monitor up for a wireless network, you can view and connect to available wireless Internet networks.

- [Add a hidden wireless network]: You can add a wireless network by manually typing in its name.
- [Connect via WPS PBC]: Press the button on the wireless router that supports PBC to easily connect to the router.
- [Connect via WPS PIN]: Enter the PIN number in the web page of the PIN-supporting wireless router to connect to the router in a simple manner.
- [Advanced Wi-Fi Settings]: When there is no available wireless network displayed on the screen, you can connect to the wireless network by entering the network information directly.

[Certificate Download]

- Download the certificates used for 802.1X EAP stored in USB.
- Only pem file extension can be downloaded.

NOTE

- IPv6 connection only supports automatic connection.

[LAN Daisy Chain]

(CEAA, CEAB, CEAC model is not supported.)

- LAN Daisy Chain forms a daisy chain of LAN ports so that even if you connect only one monitor set to a network, the other sets in the daisy chain are connected to the network.
- However, the first monitor set in the daisy chain must be connected to the network through a port that is not used for the daisy chain connection.

[SoftAP]

(CEAA, CEAB, CEAC model is not supported.)

If you set up a SoftAP, you can connect many devices via a Wi-Fi connection without a wireless router and use wireless Internet.

- The SoftAP and ScreenShare features cannot be used at the same time.
- Wi-Fi Channel: You can directly select a Wi-Fi channel.
- SoftAp Access Information
  - SSID: A unique identifier necessary to make a wireless Internet connection
  - Security Key: The security key you enter to connect to the desired wireless network
  - Number of connected devices: Shows the number of devices currently connected to your Signage device via a Wi-Fi connection. Up to 10 devices are supported.

[Ping Test]

Check your network status with the ping test.

[Port Control]

Unused ports can be blocked for network security.

[Connection Domain]

(CEAA, CEAB, CEAC model is not supported.)

Change domain for checking network connection.

NOTE

- A reboot is recommended for the settings to be applied properly.

Tips for Network Settings

- Use a standard LAN cable (Cat5 or higher with an RJ45 connector) with this display.
- Many network connection problems during set up can often be fixed by re-setting the router or modem. After connecting the display to the home network, quickly power off and/or disconnect the power cable of the home network router or cable modem, Then power on and/or connect the power cable again.
- Depending on the Internet service provider (ISP), the number of devices that can receive INTERNET service may be limited by the applicable terms of service. For details, contact your ISP.
- LG is not responsible for any malfunction of the display or Internet connection failures due to communication errors/malfunctions associated with your Internet connection or other connected equipment.
- LG is not responsible for problems within your INTERNET connection.
- You may experience undesired results if the network connection speed does not meet the requirements of the content being accessed.
- Some INTERNET connection operations may not be possible due to certain restrictions set by the Internet service provider (ISP) supplying your Internet connection.
- Any fees charged by an ISP including, without limitation, connection charges are your responsibility.

NOTE

- If you want to access the Internet directly on your display, the INTERNET connection should always be on.
- If you cannot access the Internet, check the network conditions from a PC on your network.
- When you use Network Setting, check the LAN cable or check if DHCP in the router is turned on.
- If you do not complete the network settings, the network may not function correctly.

CAUTION

- Do not connect a modular phone cable to the LAN port.
- Since there are various connection methods, please follow the specifications of your telecommunication carrier or INTERNET service provider.
- Network setting menu will not be available until the display connected to physical network.

Tips for When Configuring Wireless Network Settings

- The wireless network may be affected by interference from a device that uses 2.4 GHz frequency, such as a wireless telephone, Bluetooth device or microwave. Interference may also be caused by a device that uses 5 GHz frequency such as Wi-Fi devices.
- The wireless network service may run slowly depending on the surrounding wireless environment.
- Some devices may have a network traffic jam if any local home networks are turned on.
- To connect to a wireless router, a router that supports wireless connection is necessary; the wireless connection function of the corresponding router must also be activated. Ask the router manufacturer whether the router supports wireless connection.
- To connect to a wireless router, verify the SSID and security settings of the wireless router. Please refer to the user guide of the corresponding router regarding SSID and security settings of the wireless router.
- The monitor may not work properly if network devices (wired/wireless router or hub, etc.) are incorrectly set up. Be sure to install the devices correctly by referring to their user guides before configuring the network connection.
- The connection method may vary according to the manufacturer of the wireless router.

[User Agreement]

CEAA, CEAB, CEAC, LAAB

SETTINGS / ⚙ → [General] → [User Agreement]

Check the terms and conditions or change whether to agree or not.

[Advanced Setting]

CEAA, CEAB, CEAC, LAAB

SETTINGS / ⚙ → [General] → [Advanced Setting]

[Beacon]

(CEAA, CEAB, CEAC, LAAB model is not supported.)

- This option enables BLE Beacon, one of Bluetooth 4.0's features.
- Beacon Mode (On/Off Toggle): Enables the Beacon feature.
- The LG Beacon/iBeacon/Eddystone Type Beacon features are supported.
- iBeacon
  - Beacon UUID (hex): Set the UUID.
    1. Field1: 4byte hex value (8 digits)
    2. Field2: 2byte hex value (4 digits)
    3. Field3: 2byte hex value (4 digits)
    4. Field4: 2byte hex value (4 digits)
    5. Field5: 6byte hex value (12 digits)
  - Major (0–65535): Sets the Major value.
  - Minor (0–65535): Sets the Minor value.
- Eddystone
  - Frame: Set UUID or URL.
    1. Setting the UUID method
       - Beacon UUID (hex): Set the UUID.
         1 - Field1: 10 byte hex value (20 digits)
         2 - Field2: 6 byte hex value (12 digits)
    2. Setting the URL method
       - URL Prefix: Sets the prefix of the URL.
       - URL Suffix: Set the suffix of the URL.
       - Play via URL: Enter the part of the URL that excludes the prefix and suffix.
       - URL string length is limited to 15 characters.
- [Check] button: The button used to complete and apply the Beacon settings.

NOTE

- Some models do not support background screening services in iOS.
- A reboot is recommended for the settings to be applied properly.
- The UUID value is hexadecimal and the exact number of digits must be entered.
- The distance to Beacon may vary depending on the device.
- The distance to Beacon may vary depending on the application used in the device.
- The Beacon function is affected by radio waves because it employs the Bluetooth Low Energy (BLE) technology. If the wireless environment in the 2.4 GHz band is poor, it may not function properly.
- When you set iBeacon, LG Beacon will be set to be the same as the value of iBeacon field. But the LG Beacon setting item won't be provided separately.

[Control Interface]

Devices connected to the display can be controlled via the interface.

- [PC/OPS Power Control]: Enable you to control the power of PC or OPS as you turn the display on and off.
  - [Disable]: Disable [PC/OPS Power Control].
  - [Sync(On)]: Set the PC/OPS power to be turned on when the display is turned on.
  - [Sync(On/Off)]: Set the PC/OPS power to be turned on when the display is turned on and set the PC/OPS power to be turned off when the display is turned off.
- [Control Interface Selection]: Select the serial communication path between the display and the connected devices.
  - [Display]: Serial communication is available via a display RS-232C IN terminal.
  - [OPS]: Serial communication is available with the OPS installed in the display.

NOTE

- All models do not support the [Control Interface Selection] function.
- Depending on the model, it can be displayed as [PC/OPS Control].
- Depending on the supported interface, the sub-menu of [Control Interface Selection] may be different.
- The PC products that support the power control are MP500/MP700, and you have to purchase them separately if necessary.
- If you change [Control Interface Selection], the [RS-232C Sync] feature of [Sync Mode] may be restricted.

[Background Image]

This feature enables you to set the default background image.

- [No Signal Image]: Change the image that appears when there is no signal. If you set this option to Off, no image appears when there is no signal. Download or initialize an image file on the storage device.

NOTE

- To download an image, an image file must exist in a folder named “LG_MONITOR” or “lg_monitor” in the external memory (USB).
- Supported image file formats: “BMP”, “JPG”
- SDI Inputs are not supported.

[SIMPLINK Setup]

- This function enables SIMPLINK. ([Off], [On])
- [Device ID]: It can limit the device connected via SIMPLINK. ([All], [1] ~ [E])
- [StandBy]: It can control sending and receiving PowerOff command. ([All], [Send Only], [Receive Only], [Off])

[Crestron]

(Depending on model)

[Crestron Connected] V1

- This function enables synchronization with applications provided by Crestron.
- [Server]: This menu sets the server's IP address for the network connection with the server (equipment provided by Crestron).
- [Port] (1024~65535): This menu sets the port for the network connection with the server. The default port number is 41794.
- [IP ID] (3~254): This menu sets a unique ID for synchronizing with the application.

[Crestron Connected] V2

- The connection status of the server type shall be indicated by pictures and phrases. (Disconnected, Connecting, Connected)
- [Type]: You can select the server type you want to connect to (Off, Control System, Virtual Control, Fusion)
- [CONNECT]: If you press the button once, a set tries to connect to the server and the button phrase is changed into [DISCONNECT]. In this case, the upper items are immutable. To disconnect and change upper items, pressing the button again is needed.
- Information for connecting with the server
  - [Type]: Control System
    - [Server]: Enter the IP information of the server
    - [Port]: Enter the Port information for the server
    - [IP ID]: A unique ID that distinguishes crestron equipment from server
  - [Type]: Virtual Control
    - [Room ID]: A unique ID that distinguishes room from server. If the [IP ID] is the same, but the [Room ID] is different, the server recognizes it as a different crestron equipment.
    - [Server], [Port], [IP ID] are the same as Control System's.
  - [Type]: Fusion
    - [Method]: Connection direction can be selected. ([Device to Fusion], [Fusion to Device])
      - [Device to Fusion]: How to connect from set to server
        - [URL]: Server URL
        - [Port]: Server Port
      - [Fusion to Device]: How to connect from server to set

- [Auto Discovery]: The ability to locate other Crestron equipment in the network
- [SSL]: Communication security with server can be established. The following items are meaningful only at [SSL] on
  - [User], [Password]: When the [Authentication] function is turned on on the server, [User] and [Password] must be entered to connect with the server.
  - [Verify Certificate]: A feature that checks whether a certificate installed on a server is valid. If it is not valid, it does not connect to the server
  - [Certificate Download]: The certificate must be stored in the set to perform the [Verify Certificate] function. Only certificates with extensions .pem, .crt in the USB root directory are recognized and can be added or deleted through the menu. All certificates stored at the time of [Factory Reset] are deleted.

[XiO Cloud]

- The connection status with [XiO Cloud] is displayed. (Disconnected, Connecting, Connected)
- [CONNECT]: If you press the button once, a set tries to connect to the server and the button phrase is changed into [DISCONNECT]. To disconnect, pressing the button again is needed.

[Power On Default]

Set a default app when turning device on.

(CEAA, CEAB, CEAC model is not supported.)

Pointer Options

LAAB

You can set the pointer speed and size you want while it is on the screen.

- [Tracking Speed] : Sets the pointer speed.
- [Pointer Size] : Selects the pointer size

Display

[Select Mode]

CEAA, CEAB, CEAC, LAAB

SETTINGS / ⚙ → [Display] → [Select Mode]

[Select Mode]

This feature enables you to choose the optimal picture mode for your installation environment.

- [Mall/QSR], [Transportation], [Education], [Gov./Corp.]: Display the picture optimally for your installation environment.
- [General]: Display the picture at normal contrast, brightness, and sharpness.
- [Auto Power Save]: Adjust the screen brightness to reduce power consumption.
- [Expert], [Calibration]: Allow an expert, or anyone who loves picture quality, to manually tune to the best picture quality.
- [Hospital]: An image setting mode optimized for medical images.

For some LED models, select an image mode as follows:

- [Shopping Mall], [Airport & Station], [Office & School], [Control Room]: Displays the mode optimized for the installing environment.
- [Calibration1]: Allow an expert, or anyone who loves picture quality, to manually tune to the best picture quality.

NOTE

- The type of [Picture Mode] you can select may vary depending on the model or input signal.
- [Expert] is an option that allows a picture quality expert to fine-tune the picture quality using a specific image. Thus, it may not be effective for a normal picture.

[HDR]

This feature enables you to choose the optimal picture mode for your installation environment.

- [Mall/QSR]: Sharpens the image by increasing the contrast, brightness and sharpness.
- [General]: In a normal viewing environment, it opens a screen that can properly show the expressiveness and brightness of HDR.
- [Gov./Corp.]: The screen appears brighter and clearer than of the General screen.
- [Education]: Suitable picture for education.

For some LED models, select an image mode as follows:

- [Shopping Mall], [Airport & Station], [Office & School], [Control Room]: Displays the mode optimized for the installing environment.

[Select Content Type]

CEAA, CEAB, CEAC, LAAB

You can set the Normal or Video label for each external input.

[Brightness Settings]

CEAA, CEAB, CEAC, LAAB

SETTINGS / ⚙ → [Display] → [Picture User Settings] → [Brightness Settings]
You can adjust the brightness of the entire screen.

[Panel Brightness] (LED Light)

Controls the level of screen brightness by adjusting the backlight. The closer to 100 the brighter.

- Decrease the [Panel Brightness] (LED Light) to reduce energy consumption.
- Depending on the [Energy Saving] ([Auto]/[Maximum]), you may not be able to adjust the Panel Brightness. In this case, navigate to **SETTINGS /** ⚙ → [Display] → [Advanced Settings] → [Energy Saving] → [Brightness Control] and set to [Off] or [Minimum].
- Depending on your model, you might not have the [Panel Brightness] (LED Light) setting.

[Contrast]

Adjusts the contrast of the bright and dark areas of the picture. The closer to 100, the higher the contrast will be.

[Brightness]

Adjusts the brightness of dark areas of the screen. The closer it is to 100, the lighter the screen becomes.

[Dynamic Contrast]

Corrects the difference between the bright and dark areas of the screen for optimal results depending on the brightness of the picture.

[HDR Tone Mapping]

Suitable contrast settings based on image brightness of the HDR content.

[Peak Brightness]

Adjust peak brightness for the brightest luminance.

- Depending on your model, it might not have this settings

[Gamma]

Adjusts the medium brightness of the picture.

- BT.1886 expresses the gradation in ITU-R BT.1886, which is an international standard.

[Black Level]

Adjusts the darkness of the screen in order to display a perfect black. Select [Black Level] to match the color range of the external input device.

- This feature can be used while watching content through an external input.

[LED Local Dimming]

Maximizes the contrast ratio by making the bright areas of the screen brighter and the dark areas of the screen darker.

- [Off]: Disables the [LED Local Dimming] function.
- [Low]/[Medium]/[High]: Changes the contrast ratio.
- Turning this option [Off] may increase energy consumption.
- Depending on your model, it might not have this settings

[Motion Eye Care]

Automatically adjusts brightness and reduces image blur based on image data which reduces eyestrain.

- Turning this option [Off] may increase energy consumption.
- Depending on your model, it might not have this settings

NOTE

- Depending upon the input signal or the selected picture mode, the available options may differ.
- The configurable items differ depending upon model.

[Color Settings]

CEAA, CEAB, CEAC, LAAB

SETTINGS / ⚙ → [Display] → [Picture User Settings] → [Color Settings]

[Color]

Tones down or up the colors displayed on the screen. The closer to 100 the deeper the color.

[Tint]

Adjusts the color balance between red and green displayed on the screen. The closer to Red 50, the redder the color will be. The closer to Green 50, the greener the color will be.

[Color Gamut]

Selects the range of Colors to display.

- [Native]: Displays more vivid and richer color.
- [Auto Detect]: It automatically sets the [Color Gamut] to match the signal.
- [Dynamic]: It expands the [Color Gamut] to match the scene.
- Adobe RGB: Sets the Color Gamut to Adobe RGB standards.

[Fine Tune]

This is used when experts control it by using a test pattern. You can control it by selecting areas of six colors ([Red]/[Green]/[Blue]/[Cyan]/[Magenta]/[Yellow]). For normal images, adjustments may not result in noticeable Color changes.

- [Color Adjustment]: To make the image more colorful and lively adjust the Color and saturation of the picture.
- [Select Color]: From [Red]/[Green]/[Blue]/[Cyan]/[Magenta]/[Yellow], select a tone to adjust.
- [Adjust Saturation]/[Adjust Tint]/[Adjust Luminance]: Adjust the chroma/tint/luminance of the tone in the range of -30 to +30.

[White Balance]

The function to adjust each color to be reproduced more accurately based on white allows you to adjust the overall color tone of the screen to your preference.

- [Color Temperature]: You can set the color to make the display look cooler or warmer.
- [Method]: This method is used for fine-tuning the color temperature setting. You can control the color temperature at two points of the bright part and dark part of the video if you select [2 Points], at each point of 10 levels if you select [10 Points Signal Level(%)], and at each point of 22 levels of the video if you select [22 Points Signal Level(%)].
- [Point]: Select screen brightness for color temperature adjustment. If [Method] is set to [2 Points]; use Low to select shadows and High to select highlights.
  If [Method] is set to [10 Points Signal Level(%)]; you can select brightness using numbers indicating 10 levels. When the [Method] is set to [22 Points Signal Level(%)], you can select the brightness with the 22 levels of brightness.
- [Signal Level(%)]: Select screen brightness for color temperature adjustment.
  If [Method] is set to [10 Points Signal Level(%)]; you can select brightness using numbers indicating 10 levels. When the [Method] is set to [22 Points Signal Level(%)], you can select the brightness with the 22 levels of brightness.
- [Show brightness level at the maximum signal level(%)]: Adjusts the luminance of the highest 100 % signal level.
- [Adjust brightness level at the selected signal level(%)]: The brightness of the selected signal level can be adjusted.
  - You can do these settings only when the [Method] is set to [10 Points Signal Level(%)] or [22 Points Signal Level(%)].
- [Red]/[Green]/[Blue]: Adjust the color temperature of the selected point. Adjust the intensity of [Red]/[Green]/[Blue] in the range of -50 to 50. You can adjust respective values for the brightness selected in [Point].

NOTE

- Depending upon the input signal or the selected picture mode, the available options may differ.
- The configurable items differ depending upon model.

[Clarity Settings]

CEAA, CEAB, CEAC, LAAB

SETTINGS / ⚙ → [Display] → [Picture User Settings] → [Clarity Settings]

You can adjust the contrast of a Picture to show it more clearly.

[Sharpness]

Adjusts the sharpness of the image. The closer to 50, the sharper and clearer the image will be.

[Super Resolution]

Adjusts the resolution to make dim and blurred images clearer.

[Noise Reduction]

Removes small dots that stand out so as to make the image clean.

[MPEG Noise Reduction]

Reduces the noise produced during the creation of digital video signals.

[Smooth Gradation]

It reduces the phenomenon that the outline of the image is rugged and in a staircase pattern and displays a smoother screen.

[Real Cinema]

Expresses the feeling of watching in a movie theater by adjusting the frame ratio the same as the movie screening.

[TruMotion]

Suitable the image quality of fast-moving pictures.

- [Off]: Turns off the [TruMotion].
- [Cinematic Movement]: Adjusts the shaking of the motion on the screen to make it feel like you are in a movie theater.
- [Natural]: Sets images with a lot of motions to look natural and clear.
- [Smooth Movement]: Softens fast-moving pictures.
- [User Selection]: Sets [TruMotion] manually.
  - [De-Judder]: Adjusts juddering on the screen.
  - [De-Blur]: Reduces the blurring effects of motion.
- The advanced settings can be changed only in [User Selection] mode.

NOTE

- Depending upon the input signal or the selected picture mode, the available options may differ.
- The configurable items differ depending upon model.

[On]

The color temperature of your screen is adjusted.

[Off]

Turns off the [Reduce Blue light].

NOTE

- Some models may not be supported.

[Apply to all inputs]

CEAA, CEAB, CEAC, LAAB

Copies the current value of the detailed setting menu to the entire input, and applies only to the selected picture mode.

[Reset]

CEAA, CEAB, CEAC, LAAB

Reset the picture settings. Because the picture settings are reset according to the monitor's picture mode, please select the picture mode before resetting the picture settings.

[Aspect Ratio]

CEAA, CEAB, CEAC, LAAB

SETTINGS / ⚙ → [Display] → [Aspect Ratio]

This feature enables you to change the picture size to view the picture at its optimal resolution.

- [Full]: Stretch the picture to fill the screen.
- [Original]: Display the picture at its original ratio.

[Advanced Setting]

CEAA, CEAB, CEAC, LAAB

SETTINGS / ⚙ → [Display] → [Advanced Setting]

[Ultra HD Deep Color]

If you connect an HDMI, DP, or OPS device to one of the Deep Color adjustable ports, you can select between Ultra HD Deep Color "8K(12G), 4K(6G), or Off(3G)" in the Ultra HD Deep Color settings menu.

If a compatibility issue occurs with a graphics card when the Deep Color option is set to 8K or 4K at 3840 x 2160 @ 60 Hz, set the Deep Color option back to Off.

- HDMI, DP, and OPS specifications may vary depending on the input port. Check the specifications of each device before connecting.
- HDMI input port 1, 2 is best suited for high definition videos that are 4K @ 60 Hz (4:4:4, 4:2:2). However, video or audio may not be supported depending on the specifications of the external device. If this is the case, please connect the device to a different HDMI port.
- This feature may not be available on some models.

[Energy Saving]

- [Smart Energy Saving]: Automatically adjust the brightness of the screen according to the brightness of the picture to save energy.
  - [On]: Enable the Smart Energy Saving feature.
  - [Off]: Disable the Smart Energy Saving feature.
- [Brightness Control]: Adjust the brightness of the screen to save energy.
  - [Auto]: Automatically adjust the brightness of the screen according to ambient light.
  - [Off]: Disable energy saving.
  - Minimum/Medium/Maximum: Use energy saving according to the energy saving level set for the monitor.
- [Brightness Range Adjustment]: Sets the min/max values of the brightness range for the backlights adjusted by the illumination sensors.
  - [Min Backlight]: Sets the min value of the backlights.
  - [Max Backlight]: Sets the max value of the backlights.
- [Brightness Scheduling]: Adjust the backlight at specified times.
  - You can set this feature to [On/Off].
  - Add schedule by setting the schedule time and backlight/LED Light value.
  - If the current time has not been set, [Brightness Scheduling] is disabled.
  - You can add up to six schedules, and they are sorted in ascending order by time.
  - You can edit a schedule by selecting it from the list and pressing the [OK] button.

* Some models may not be supported.

[HDMI IT Content]

Set the HDMI IT Contents function.

- [Off]: Disable the HDMI IT Contents function.
- [On]: Enable the HDMI IT Contents function.

  This feature automatically changes the monitor's picture mode based on HDMI Contents information when an HDMI signal is entered.

  Even if the monitor's picture mode has been changed by the HDMI IT Contents feature, you can change the picture mode again manually.

  As this has a higher priority than the picture mode set by the user, the existing picture mode may be changed when the HDMI signal changes.

[LED Local Dimming]

Make the light areas of the screen lighter and the dark areas darker for maximum contrast.

* Some models may not be supported.

[Average Picture Level Auto Control]

Can use image quality control based on APL (Average Picture Level) of the monitor input image. When using the monitor as a Video Wall, it is recommended to set this function off to prevent an image quality difference between the monitors.

* Some models may not be supported.

NOTE

- Return to default settings by clicking [Admin] → [Factory Reset].

[Low Latency]

- [Off]: Frame delay occurs.
- [On]: Not supported in multi-mode and certain layouts. Frame delay does not occur, so this setting is recommended for latency-sensitive cases.

* Some models may not be supported.

[SDI Color Format]

Sets the pixel encoding value, which is part of the SDI Packet AVI Infoframe.

- [Auto]: Sets to the pixel encoding value received from the device.
- RGB444: Sets the pixel encoding value to RGB444.
- YCbCr444: Sets the pixel encoding value to YCbCr444.
- YCbCr422: Sets the pixel encoding value to YCbCr422.

* Some models may not be supported.

NOTE

- This feature works in SDI.

[Genlock]

When the Genlock signal is connected to the REF IN port and the Genlock feature is turned on, the monitor can use the video signal synchronisation feature.

* Some models may not be supported.

[Dynamic Brightness]

Set whether to use the peak luminance that can produce the maximum brightness in a local area.

- [Off]: Do not use peak luminance. The brightness that can be expressed at the maximum decreases and the ability to express low gradations improves.
- [On]: Use peak luminance. The brightness that can be expressed to the maximum increases, and the expressive power of low gradation deteriorates.

* Some models may not be supported.

[Frequency Spread]

Spreads the noise generated by electronic devices.

- [Off]: Scan-line effect is removed when shooting with the camera.
- [On]: Minimizes the impact on the human body and peripheral devices by lowering electromagnetic waves.

* Some models may not be supported.

[CamSync]

- Control output frame for the installing environment. [Frequency Spread] must be set to Off.

* Some models may not be supported.

[Residential Mode]

Residential Mode provides excellent image quality while maintaining a viewing level in environments with relatively low brightness requirements, such as residential spaced and conference rooms.

By utilizing full bit-depth at low brightness, it delivers a premium visual experience optimized for residential environments.

- [Off]: Do not use Residential Mode. Provides factory default maximum brightness, but the ability to express low gradations deteriorates.
- [On]: Use Residential Mode. Provides a screen optimized for residential environments and enhances low-gradation expression capability.

* Some models may not be supported.

NOTE

- Cannot be used simultaneously with Dynamic Brightness.

Sound

[Use Wired Speaker]

CEAA, CEAB, CEAC, LAAB

SETTINGS / ⚙ → [Sound] → [Sound Out] → [Use Wired Speaker]

[Optical Out Device]

Connect audio devices that support optical digital to the optical digital audio output port to enjoy richer sound more conveniently from your Signage.

- Applied only to models with an optical digital port.
- You can adjust the volume using the Signage remote control on some devices.

[HDMI(ARC) Device]

Outputs the sound of Signage through external audio devices connected to the HDMI (ARC) port.

- This option is activated when SIMPLINK has been set to [On].

[Use No Speaker]

CEAA, CEAB, CEAC

SETTINGS / ⚙ → [Sound] → [Sound Out] → [Use No Speaker]

Does not support the main speaker.

NOTE

- Some recently connected devices may automatically attempt to reconnect to the Signage monitor when it is turned on.
- It is recommended that you set LG audio devices that support LG Sound Sync to LG TV mode or LG Sound Sync mode before connecting.
- Press [Device Selection] to view the devices that are or that can be connected and connect other devices.
- You can use the Signage remote control to adjust the volume of the connected device.
- If the audio device fails to connect, check that it is switched on and available for connection.
- Depending on the model, the [Main Speaker] or [Use No Speaker] function may not be supported.

[Advanced Settings]

CEAA, CEAB, CEAC, LAAB

[Balance]

SETTINGS / ⚙ → [Sound] → [Advanced Settings] → [Balance]

You can adjust the volume of the left and right speakers.

- This setting is only available for Main Speaker.

[Equalizer]

SETTINGS / ⚙ → [Sound] → [Advanced Settings] → [Equalizer]

You can adjust the sound by increasing or decreasing the output of the specific frequency range of the voice signal.

- This option can be enabled if [Sound] → [Select Mode] is set to [Standard].

[Reset]

SETTINGS / ⚙ → [Sound] → [Advanced Settings] → [Reset]

Restores the detailed effect settings for the [Standard] sound mode to the initial settings.

[LG Sound Sync]

CEAA, CEAB, CEAC

SETTINGS / ⚙ → [Sound] → [Advanced Settings] → [LG Sound Sync]

Connect LG Sound Sync devices to the optical digital input port and set [Sound Out] to [Optical Out Device].

If you set this function to [On], you can adjust the volume of the connected LG Sound Sync device with the Signage remote control.

- If the auto power function of a soundbar supporting LG Sound Sync is set to On, the power of the soundbar turns on or off together with the Signage power.

[Match Screen and Sound]

CEAA, CEAB, CEAC, LAAB

SETTINGS / ⚙ → [Sound] → [Advanced Settings] → [Match Screen and Sound]

You can sync the currently output sound of the speaker. The closer the value is set to 60, the slower the voice output speed will be than the default speed.

Select [Bypass] to output the sound from external devices without any audio delay. Audio may be outputted earlier than video due to the processing time for video that is inputted into the Signage.

- The adjustment options vary depending on the [Sound Out].

[Digital Sound Output]

CEAA, CEAB, CEAC, LAAB

SETTINGS / ⚙ → [Sound] → [Advanced Settings] → [Digital Sound Output]

Allows you to change settings for [Digital Sound Output].

- **SETTINGS /** ⚙ → [Sound] → [Sound Out] → You can set the settings when [Use Wired Speaker] is [Optical Out Device] / [HDMI(ARC) Device].
- When operating [Pass Through], sound effects may not be output.
- The codec output with the equipment may vary from the input signal.

[PCM]	All	PCM
[Auto] / [Pass Through]	MPEG	PCM
	Dolby Digital	(Optical / HDMI ARC) Dolby Digital
	Dolby Digital Plus / Atmos	(Optical) Dolby Digital (HDMI ARC) Dolby Digital / Dolby Digital Plus / Atmos
	Dolby TrueHD (HDMI model only)	(Optical) Dolby Digital (HDMI ARC) Dolby Digital / Dolby Digital Plus / Atmos
	HE-AAC / AAC	(Optical) Dolby Digital (HDMI ARC) Dolby Digital / Dolby Digital Plus
	DTS / DTS Express / DTSHD MA	(Optical / HDMI ARC) DTS
	DTS-HD	(Optical / HDMI ARC) DTS
	DTS:X	(Optical / HDMI ARC) DTS

- Dolby TrueHD, Dolby Atmos : Some models may not be supported.

Admin

[Lock Mode]

CEAA, CEAB, CEAC, LAAB

SETTINGS / ⚙ → [Admin] → [Lock Mode]

[Home Dashboard Lock]

When you set the Home Dashboard Lock, you can limit the change in the settings of the Home Dashboard.

[USB Lock]

This feature enables you to configure the USB lock feature so that settings or content cannot be changed.

[OSD Lock]

This feature enables you to configure the OSD lock feature so that settings or content cannot be changed.

- Press and hold the Settings key for at least 10 seconds and enter password to access the settings menu in OSD Lock.

[IR Operation Lock]

- If you set this feature to [Off (Normal)], you can use your remote control.
- If you set this feature to [On (Power Key Only)], you can only use the power key.
- If you set this feature to [On (Block All)], you cannot use your remote control. (However, Power On feature is available.)
- Press and hold the Settings key for at least 10 seconds and enter password to access the settings menu in IR Operation Lock.

[Local Key Lock]

This feature enables you to configure the Local Key Operation Lock feature so that settings or content cannot be changed.

- If you set this feature to [Off (Normal)], you can use the local keys on the monitor.
- If you set this feature to [On (Power Key Only)], you can only use the power key. (When you use a joystick, press and hold a local key to turn on/off the monitor.)
- If you set this feature to [On (Block All)], you cannot use the local keys. (However, Power On feature is available.)

[Wi-Fi Lock]

(CEAA, CEAB, CEAC model is not supported.)

This feature enables you to turn the Wi-Fi feature on or off.

[Wired Connection Lock]

This feature enables you to turn the Wired network connection on or off.

[Screen Share Lock]

(CEAA, CEAB, CEAC model is not supported.)

- [On]: This feature enables you to turn the Screen Share feature off.
- [Off]: This feature enables you to turn the Screen Share feature on.
- [Off (PIN)]: This feature enables you to use the Screen Share feature using PIN number.

If the Screen Share Lock value is changed, the function is not applied without a reboot.

[Change Password]

CEAA, CEAB, CEAC, LAAB

You can change the admin password.

1. Enter your current password.
2. Enter a new 6-digit password.
3. Enter the same password again in the Confirm Password field for confirmation.

[Software Update]

CEAA, CEAB, CEAC, LAAB

Use software updates to check and obtain the available version.

- Software Version: Display the version of the software.
- Auto Update: When it is set to On, updates are automatically made without a separate confirmation procedure.
- Update Detection Notification: Sets whether to Enable/Disable the update detection notification.
- CHECK FOR UPDATES: Manual checks for available updates in the server.

This feature is available only when network is connected.

[Enterprise Settings]

CEAA, CEAB, CEAC, LAAB

- Enter your company account code to apply the corresponding enterprise settings.
- When your code has been entered, the monitor set gets reset, thereby applying the corresponding enterprise settings.
- This feature does not get activated if a code has already been entered.

[Factory Reset]

CEAA, CEAB, CEAC, LAAB

Initializes all settings in [Setting] and files from the internal storage.

The exceptions are RGB gain value of [Calibration1], [Calibration2] mode, [Video Wall]([Tile Mode], [Tile Mode Setting], [Natural Mode], [Frame Control], [Scan Inversion]) and [Server Setting] items of [Ez Setting], and [Set ID] items of [General].

NOTE

- It keeps the existing settings because the Off / On button in the User menu only affects the active / inactive status of the submenu.

CONTENT MANAGER

Web Login

- Different features are supported depending on the product.

This Signage product comes with a feature that enables you to access it on your PC or mobile device.

- Content Manager, Control Manager, Log Out, Change Password menus are provided.

- URL: https://set ip:3777
- The default password: (Serial Number) + LGe12#

  E.g. If the serial number is ABCD123456789, enter ABCD123456789LGe12# as the password.
  - The serial number can be found on the tag attached to the product or on the **SETTINGS /** ⚙ → [General] → [System Information] menu.

⚠ CAUTION

- Supported resolutions (this program is optimized for the following resolutions):
  - PC: 1920 x 1080
  - Mobile: 360 x 640(1440 x 2560, 1080 x 1920), DPR
- Supported browsers (this program is optimized for the following browsers):
  - Chrome 85 or later (recommended)

Content Manager

[Player]

CEAA, CEAB, CEAC, LAAB

HOME / → (Player)

The Content Manager app's player feature enables you to play/manage contents of video, image, template, SuperSign and playlist in an integrated way.

[Continuous Play]

1 Select your desired type of content from the tab on the left and click [Continuous Play] in the upper right-hand corner of the screen.
2 Click [Play] at the bottom of the screen and enjoy the content you have selected.

[Export]

1 Select your desired type of content from the tab on the left and click [Export] in the upper right-hand corner of the screen.
2 Select the content you wish to export.
3 Select the device to which you wish to export the content and Click [Copy]/[Move] at the bottom of the screen. (If a content file stored on the target device has been selected, the processing of the content file is skipped.)
4 You can see that the content has been moved/copied to the device.

[Delete]

1 Select your desired type of content from the tab on the left and click [Delete] in the upper right-hand corner of the screen.
2 Select the content you wish to delete.
3 Click [Delete] at the bottom of the screen.
4 You can see that the content has been deleted.

[Options]

1 Click [Options] in the upper right-hand corner of the screen.
2 1) Choose your desired sort criterion to sort content files either by file name or in the order they have been played (the most recently played file shown at the top of the list).
2) It is possible to only view the content stored on your desired device by filtering content files by device.

[Create Playlist]

When creating a playlist, *, /, ", :, ?, <, >, |, \, ., # cannot be used in the playlist file name. In addition, if the playlist contains content files whose names include such characters, you cannot move or copy the playlist.

1 Select the [Playlist] tap from the tab on the left and click [Create Playlist] in the upper right-hand of the screen.
2 Select the content you wish to add to the playlist and click [NEXT] at the bottom of the screen.
3 Set a play time for each piece of content (applicable only for photo and template content), as well as other items such as Conversion Effect, Ratio, and Auto Playback, and then click [DONE] button at the bottom of the screen.
4 You can see a new [Playlist] has been created.

[Scheduler]

CEAA, CEAB, CEAC, LAAB

HOME / → (Scheduler)

The Content Manager app's scheduler feature enables certain content to be played at a scheduled time through a playlist or external input.

Creating a Schedule

1 Click [New Schedule] in the upper right-hand corner of the screen.
2 Choose between [Playlist] and [Input Source].
3 1) If you have selected [Playlist], select the playlist you wish to schedule the playback of.
2) If you have selected [Input Source], select the external input source you wish to schedule the playback of.
4 Enter schedule information and create a new schedule. (When creating a schedule, *, /, ", :, ?, <, >, |, \, ., # cannot be used in the schedule file name. In addition, if the playlist linked to the schedule contains content files whose names include such characters, you cannot move or copy the playlist.)
5 Watch the playlist or external input you selected play back at its scheduled time.

Importing a Schedule

1 Click [Import] in the upper right-hand corner of the screen.
2 Select the external storage device from which you wish to import a schedule.
3 Select the schedule you wish to import to your monitor. (You can only choose a single schedule.)
4 Click [Done] at the bottom of the screen.
5 Check that the schedule has been imported to the monitor's internal storage memory.

Exporting a Schedule

1 Click [Export] in the upper right-hand corner of the screen.
2 Select the external storage device to which you wish to export a schedule.
3 Select the schedule you wish to export from your monitor. (You can choose multiple schedules.)
4 Click [Done] at the bottom of the screen.
5 Check that the schedule has been exported to the external storage device you selected.

[Delete Schedule]

1 Click [DELETE] in the upper right-hand corner of the screen.
2 Select the schedules you wish to delete.
3 Click [DELETE].
4 Check that the schedules have been deleted.

[Calendar View]

1 When you have registered schedules, click [Calendar View].
2 You can see that the schedules registered are displayed in the form of a timetable.

NOTE

- If the schedule creation time overlaps, the previously created schedule is deleted.
- Schedule does not work while Scheduling list app is running.

[Editor]

CEAA, CEAB, CEAC, LAAB

HOME / → (Editor)

The Content Manager app's editor feature enables you to add your desired templates.

1 Select the template of your desired format.
2 Modify the template's text.
  2-1. Apply your desired font style (Size, Weight, Underline, Italic)
3 Modify the media file.
  3-1. Select and apply the rate you want.
4 Save the template by clicking [Save] in the top right-hand corner of the screen.
5 Check that the template you saved is shown in the template list.

Supported Photo & Video Files

NOTE

- Subtitles are not supported.

Supported video codecs

Extension	Codec	
.asf, .wmv	**Video**	VC-1 Advanced Profile (except WMVA), VC-1 Simple and Main Profiles
	Audio	WMA Standard (except WMA v1/WMA Speech)
.avi	**Video**	Xvid(GMC is not supported), H.264/AVC, Motion Jpeg, MPEG-4
	Audio	MPEG-1 Layer I, II, MPEG-1 Layer III (MP3), Dolby Digital, LPCM, ADPCM
.mp4, .m4v, .mov	**Video**	H.264/AVC, MPEG-4, HEVC, AV1
	Audio	Dolby Digital, Dolby Digital Plus, AAC, MPEG-1 Layer III (MP3), Dolby AC-4
.3gp **.3g2**	**Video**	H.264/AVC, MPEG-4
	Audio	AAC, AMR-NB, AMR-WB
.mkv	**Video**	MPEG-2, MPEG-4, H.264/AVC, VP8, VP9, HEVC, AV1
	Audio	Dolby Digital, Dolby Digital Plus, AAC, PCM, MPEG-1 Layer I, II, MPEG-1 Layer III (MP3)
.ts, .trp, .tp, .mts	**Video**	H.264/AVC, MPEG-2, HEVC
	Audio	MPEG-1 Layer I, II, MPEG-1 Layer III (MP3), Dolby Digital, Dolby Digital Plus, AAC, PCM, Dolby AC-4
.mpg, .mpeg, .dat	**Video**	MPEG-1, MPEG-2
	Audio	MPEG-1 Layer I, II, MPEG-1 Layer III (MP3)
.vob	**Video**	MPEG-1, MPEG-2
	Audio	Dolby Digital, MPEG-1 Layer I, II, DVD-LPCM

- Dolby AC-4: Some models may not be supported.

Maximum transmit ratio	
FHD movie	H.264 1920 x 1080 @ 60P BP/MP/HP @ L4.2 40 Mbps HEVC 1920 x 1080 @ 60P Main/Main10 @ L4.1 40 Mbps
UHD movie (ULTRA HD models only)	H.264 3840 x 2160 @ 30P BP/MP/HP @ L5.1 50 Mbps HEVC 3840 x 2160 @ 60P Main/Main10 @ L5.1 60 Mbps
HFR Video (HFR support models only)	HEVC 3840 x 2160 @ 120P Main/Main10 @ L5.2 Max 60 Mbps
Dolby Vision Video (4K models: Dolby Vision support models only)	HEVC 3840 x 2160 @ 60P Main/Main10 @ L5.1 Max 50 Mbps
Dolby Vision Video (8K models: Dolby Vision support models only)	HEVC 7680 x 4320 @ 60P Main/Main10 @ L6.1 Max 100 Mbps (8K models only)
8K Video (8K models only)	AV1 7680 x 4320 @ 60P Max 50 Mbps HEVC 7680 x 4320 @ 60P Main/Main10 @ L6.1 Max 100 Mbps

Supported Photo File Formats

File type	Format	Resolution
.jpeg, .jpg, .jpe	**JPEG**	• Minimum: 64 x 64 • Maximum: - Normal Type: 15360 (W) x 8640 (H) - Progressive Type: 4800 (W) x 3600 (H)
.png	**PNG**	• Minimum: 64 x 64 • Maximum: 5760 (W) x 5760 (H)
.bmp	**BMP**	• Minimum: 64 x 64 • Maximum: 1920 (W) x 1080 (H)
.heif, .heic	**HEIF**	• Minimum: 64 x 64 • Maximum: 4800 (W) x 3600 (H), 9600 (W) x 7200 (H) (8K models only)
.avif	**AVIF**	• Minimum: 64 x 64 • Maximum: 4800 (W) x 3600 (H), 9600 (W) x 7200 (H) (8K models only)

• HEIF / HEIC formats do not support transition effects and screen rotation.

Cautions for Video Playback

- Streams that include Global Motion Compensation (GMC) and Quarterpel Motion Estimation (Qpel) are not supported.
- ULTRA HD video (ULTRA HD models only): 3840 x 2160, 4096 x 2160
- Some HEVC-encoded ULTRA HD videos other than the content officially provided by LG Electronics may not be played.
- Some codecs can be supported after a software upgrade.

Extension	Codec	
.mkv, .mp4, .ts	**Video**	H.264/AVC, HEVC
	Audio	Dolby Digital, Dolby Digital Plus, AAC

- Only Window Media Audio V7 and later are supported.
- The AAC Main Profile is not supported.
- Video files created by some encoders may not be played.
- Video files in a different format than specified may not be played properly.
- Video files stored on a USB storage device that does not support High Speed may not be played properly.
- Videos with unsupported audio only play video or do not play.
- HFR video files do not support transition effects and screen rotation.
- 8K video files do not support transition effects and screen rotation. (8K models only)

Tips for using USB storage devices

- Only USB storage devices are recognized.
- USB storage devices connected to the monitor through a USB hub may not work properly.
- It is recommended that you use a USB hub or USB storage device with a power supply.
- USB storage devices that use an automatic recognition program may not be recognized.
- USB storage devices that use their own drivers may not be recognized.
- The recognition speed of a USB storage device may depend on each device.
- Please do not turn off the display or unplug the USB device when the connected USB storage device is working. When the device is suddenly separated or unplugged, the stored files or the USB storage device may be damaged.
- Please do not connect the USB storage device which was artificially maneuvered on the PC. The device may cause the product to malfunction or fail to be played. Remember to only use USB storage devices that store normal music, image, and/or movie files.
- Storage devices formatted with utility programs that are not supported by Windows may not be recognized.
- Please connect power to a USB storage device (over 0.5 A) which requires an external power supply. Otherwise, the device may not be recognized.
- Please connect a USB storage device with the cable offered by the device maker.
- Some USB storage devices may not be supported or operated smoothly.
- File alignment methods of the USB storage device is similar to Windows and filenames can include up to 100 English characters.
- Be sure to back up important files since data stored in a USB memory device may be damaged. We will not be responsible for any data loss.
- It is recommended that you use an external USB HDD with a rated voltage of 5 V or less and a rated current of 500 mA or less. If you use a device requiring a higher voltage/current than the rated voltage/current, it may not operate properly due to lack of current.
- Please use only USB storage devices formatted with the FAT32, exFAT or NTFS file system provided by Windows.
- It is recommended to use storage devices with capacities up to 32 GB for USB memory and up to 2 TB for USB hard drives.
- Any device with more than the recommended capacity may not work properly.
- Using a USB extension cable may cause operational issues or prevent proper function.
- If a USB hard drive with a power-saving feature does not function properly, turn the drive off and on to restore normal operation. For more details, refer to the user manual of the USB hard drive.
- Press the (INPUT) button on the remote control. Focus on the USB storage device you wish to remove, then press the (EJECT) button that appears to the right to remove it. Removing the USB storage device without executing (EJECT) may cause errors on the device or storage device.
- USB storage devices supported by mobile devices may not be recognised.

- Even if a USB storage device has multiple partitions, their usage may be partially limited.
- If a USB storage device is connected to a USB multi-card reader, its volume data may not be detected.
- If the USB storage device does not work properly, remove it and connect it again.
- USB storage devices (USB 2.0 or below) are also supported. However, they may not work properly in the videos list.
- A maximum of 999 folders or files can be recognized under one folder.
- When distributing contents to USB while playing a video in UHD resolution, the video might experience temporary stuttering.
- Even if multiple USB storage devices are connected, up to three USB storage devices can be used.
- When using SuperSign CMS, it is recommended to use only one USB storage device.

GALLERY MODE

This mode allows you to appreciate the natural environment and famous paintings.

HOME / ⌂ → Open the [Gallery Mode] app.

- You can click and play the representative theme image that appears in the middle of the screen, or click the theme preview image that appears at the bottom of the screen to play.
- You can also go to [MY THEMES] at the top right of the screen and set the order of the themes to play.
- Within the theme player, you can click the [OK] button on the remote control to view information about the theme you are currently playing.
  - If you press the "Down" button on the remote control in the theme information or scroll with the mouse, you can display a list of themes and select the themes you want to play.
  - [Speed] allows you to adjust the speed at which your theme plays.
  - [Transition] allows you to select a theme transition effect.
  - [Theme Sound] allows you to turn on and off your background music.
  - [Speed] and [Transition] are not supported in the video theme.
- A total of 5 themes ([Sunny Day], [Rainy Day], [Art Gallery], [Art Photos], and [Colorful Spring]) are available, and the supported images are as follows.
- For FHD models, video themes are not provided.

SCREENSHARE

(CEAA, CEAB, CEAC model is not supported.)

This feature allows the screen of a user's device such as a mobile or PC Windows to be shared with a display using a wireless connection such as WiDi or Miracast.

How to Use [ScreenShare]

INPUT / → → [ScreenShare]

1 Connect according to the instructions provided by the guide that can be accessed through the CONNECTION GUIDE button in the upper right.

2 Once the connection is established, Screen Share between the user device and the monitor is enabled.

NOTE

- For the information on how to use Intel WiDi, visit PC/laptop manufacturer webpage.
- This feature only works properly with WiDi 3.5 or later versions.
- This feature only works on Windows 8.1 or later.

MANAGEMENT TOOLS

Picture ID

[Picture ID] is used to change the settings of a specific set (monitor) using a single IR receiver for multi-vision. Communication is possible between a monitor with an IR receiver and other monitors using RS-232C cables. Each monitor is identified by a Set ID. Setting [Picture ID] allows you to only use the remote control with monitors with a [Set ID] that matches the [Picture ID].

1 Assign [Set ID] to the installed monitors as shown below:

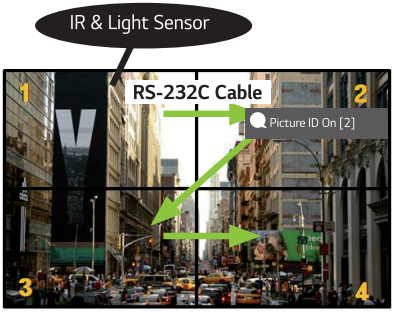

2 Press the red [Picture ID] [On] button on the remote control.

3 Make sure that the Picture ID you set is identical to the [Set ID] of the monitory you wish to control.

- A set with a [Set ID] that is different from the [Picture ID] cannot be controlled by IR signals.

NOTE

- If [Picture ID] has been set to 2, only the upper right monitor, which has a [Set ID] of 2, can be controlled by IR signals.
- If you press the green [Picture ID] [Off] button on your remote control, the [Picture ID] for all monitors are turned off. If you then press any button on the remote control, all monitors can be controlled by IR signals regardless of their [Set ID]'s.

IR CODE

- All models do not support the HDMI/USB function.
- Some key codes may not be supported depending on the model.

Code (Hex)	Function	Remarks
08	(POWER)	Remote control button
C4	MONITOR ON	Remote control button
C5	MONITOR OFF	Remote control button
95	**ENERGY SAVING**	Remote control button
0B	INPUT (Select input)	Remote control button
10	Number Key 0	Remote control button
11	Number Key 1	Remote control button
12	Number Key 2	Remote control button
13	Number Key 3	Remote control button
14	Number Key 4	Remote control button
15	Number Key 5	Remote control button
16	Number Key 6	Remote control button
17	Number Key 7	Remote control button
18	Number Key 8	Remote control button
19	Number Key 9	Remote control button
02	(Vol +)	Remote control button
03	(Vol -)	Remote control button
E0	Brightness (Page Up)	Remote control button
E1	Brightness (Page Down)	Remote control button
DC	(3D)	Remote control button
32	1/a/A	Remote control button
2F	CLEAR	Remote control button
7E	SIMPLINK	Remote control button
79	ARC (Mark/Aspect Ratio)	Remote control button
4D	PSM (Picture Mode)	Remote control button
09	(MUTE)	Remote control button

Code (Hex)	Function	Remarks
43	(SETTINGS/MENU)	Remote control button
99	Auto Configuration	Remote control button
40	(Up)	Remote control button
41	(Down)	Remote control button
06	(Right)	Remote control button
07	(Left)	Remote control button
44	(OK)	Remote control button
28	(BACK)	Remote control button
7B	Tile	Remote control button
5B	Exit	Remote control button
72	Picture ID On (Red)	Remote control button
71	Picture ID Off (Green)	Remote control button
63	Yellow	Remote control button
61	Blue	Remote control button
5F	W.BAL	Remote control button
3F	(S.MENU)	Remote control button
7C	(HOME)	Remote control button
97	Swap	Remote control button
96	Mirror	Remote control button

CONTROLLING MULTIPLE PRODUCTS

• This only applies to certain models.

Use this method to connect several products to a single PC. You can control several products at a time by connecting them to a single PC.

In the Option menu, the Set ID must be between 1 and 1000 without being duplicated.

Connecting cables

• Images may differ according to the model.

Connect the RS-232C cable as shown in the picture.

The RS-232C protocol is used for communication between the PC and product. You can turn the product on/off, select an input source and adjust the OSD menu from your PC.

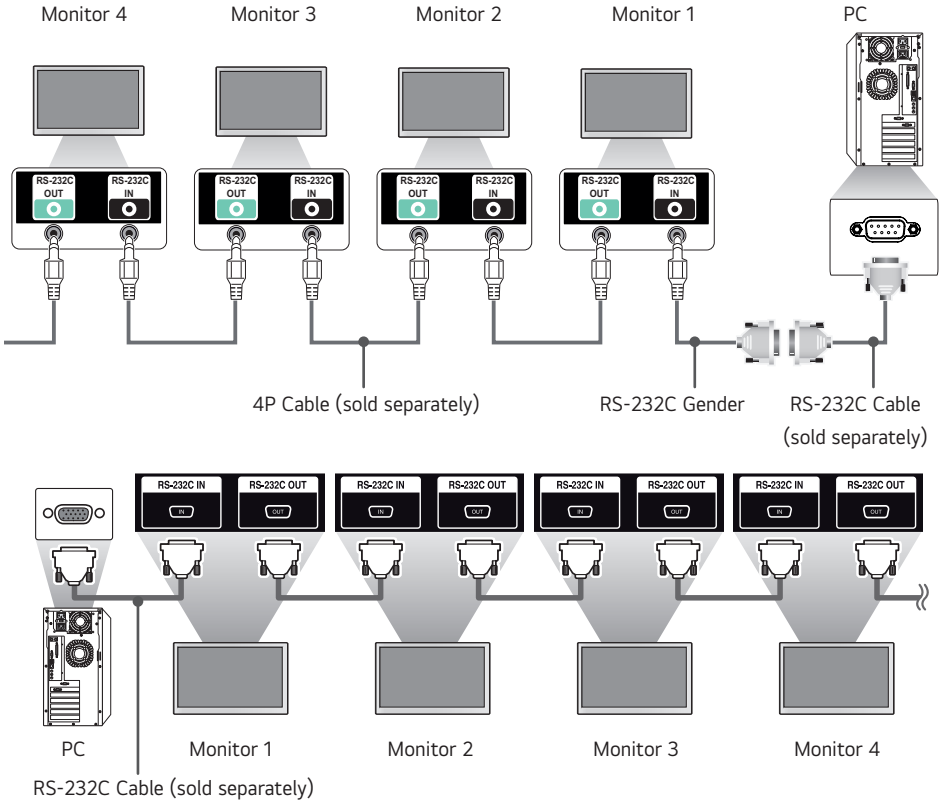

Communication Parameter

Baud Rate: 9600 BPS
Data Length: 8 bits
Parity Bit: None
Stop Bit: 1 bit
Flow Control: None
Communication Code: ASCII

NOTE

- When using 3-wire connections (non-standard), an IR daisy chain cannot be used.
- Be sure to only use the provided gender to connect properly.
- When you have daisy-chained multiple Signage products to control them simultaneously, if you attempt to turn on/off the master device in a continuous manner, some products may not turn on. In this case, you can turn those monitors on by pressing the **MONITOR ON** button, not the Power button.

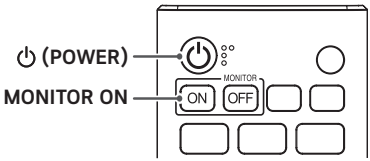

Command Reference List

		Command		Data (Hexadecimal)
		1	2	
01	[Power]	k	a	00 to 02
02	Select Input	x	b	See Select Input
03	[Aspect Ratio]	k	c	See [Aspect Ratio]
04	[Brightness Control]	j	q	00 to 04
05	[Picture Mode]	d	x	See [Picture Mode]
06	[Contrast]	k	g	00 to 64
07	[Brightness]	k	h	00 to 64
08	[Sharpness]	k	k	00 to 32
09	[Color]	k	i	00 to 64
10	[Tint]	k	j	00 to 64
11	[Color Temperature]	x	u	70 to D2
12	[Balance]	k	t	00 to 64
13	[Sound Mode]	d	y	See [Sound Mode]
14	[Mute on]	k	e	00 to 01
15	Volume Control	k	f	00 to 64
16	[Current Time] 1 (year/month/day)	f	a	See [Current Time] 1 (year/month/day)
17	[Current Time] 2 (hour/minute/second)	f	x	See [Current Time] 2 (hour/minute/second)
18	[No Signal Power Off (15 Min)]	f	g	00 to 01
19	[No IR Power Off (4 hour)]	m	n	00 to 01
20	[Language]	f	i	See [Language]
21	[Default] Settings	f	k	00 - 02
22	Current Temperature	d	n	FF
23	[Key]	m	c	See [Key]
24	Time Elapsed	d	l	FF
25	Product Serial Number Check	f	y	FF

		Command		Data (Hexadecimal)
		1	2	
26	[Software Version]	f	z	FF
27	[White Balance] Red Gain	j	m	00 to FE
28	[White Balance] Green Gain	j	n	00 to FE
29	[White Balance] Blue Gain	j	o	00 to FE
30	[White Balance] Red Offset	s	x	00 to 7F
31	[White Balance] Green Offset	s	y	00 to 7F
32	[White Balance] Blue Offset	s	z	00 to 7F
33	[Backlight]	m	g	00 to 64
34	[Screen Off]	k	d	00 to 01
35	[Tile Mode]	d	d	00 to FF
36	[Tile Mode] Check	d	z	FF
37	[Tile ID]	d	i	See [Tile ID]
38	[Natural Mode] (In Tile Mode)	d	j	00 to 01
39	[DPM] / [DPM (Standby Mode)]	f	j	See [DPM] / [DPM (Standby Mode)]
40	Remote Control/Local Key Operation Lock	k	m	00 to 01
41	[Power On Delay]	f	h	00 to FA
42	[Fail Over] Mode	m	i	00 to 02
43	[Fail Over] Input	m	j	See [Fail Over] Input
44	Remote Control Key Lock	t	p	00 to 02
45	[Local Key Operation Lock]	t	o	00 to 02
46	Status Check	s	v	See Status Check
47	[Daylight Saving Time]	s	d	See [Daylight Saving Time]
48	[PM Mode]	s	n, 0c	00 to 05
49	[ISM Method]	j	p	See [ISM Method]
50	[Network Settings]	s	n, 80(81)(82)	See [Network Settings]

		Command		Data (Hexadecimal)
		1	2	
51	[Power On Status]	t	r	00 to 02
52	Wired [Wake On LAN] / [Wake On LAN (Networked Standby Mode)]	f	w	00 to 01
53	[Screen Rotation]	t	h	00 to 03
54	[Time Sync]	s	n, 16	00 to 01
55	[Contents Sync]	t	g	00 to 01
56	[LAN Daisy Chain]	s	n, 84	00 to 01
57	[External Input Rotation]	s	n, 85	00 to 03
58	[Beacon]	s	n, 88	00 to 01
59	[Brightness Scheduling] Mode	s	m	00 to 01
60	[Brightness Scheduling]	s	s	See [Brightness Scheduling]
61	[Multi Screen] Mode & Input	x	c	See [Multi Screen] Mode & Input
62	[Aspect Ratio] (Multi Screen)	x	d	See [Aspect Ratio] (Multi Screen)
63	[Screen Off] (Multi Screen)	x	e	See [Screen Off] (Multi Screen)
64	[Screen Off Always]	s	n, 0d	00 to 01
65	Stop Video	k	x	00 to 01
66	Wireless [Wake On LAN] / [Wake On LAN (Networked Standby Mode)]	s	n, 90	00 to 01
67	[OSD Lock]	k	l	00 to 01
68	[HDMI IT Content]	s	n, 99	00 to 01
69	[Holiday Setting]	s	n, 9b	See [Holiday Setting]
70	[UPnP]	s	n, 9c	00 to 01
71	[Home Dashboard Lock]	s	n, 9d	00 to 01
72	[USB Lock]	s	n, 9e	00 to 01
73	[Wi-Fi Lock]	s	n, 9f	00 to 01
74	[Screen Share Lock]	s	n, a0	00 to 01
75	[Backup via storage]	s	n, a1	See [Backup via storage]

		Command		Data (Hexadecimal)
		1	2	
76	[Digital Audio Input]	s	n, a2	00 to 01
77	[Booting Logo Image]	s	n, a3	00 to 01
78	[SoftAP]	s	n, a4	00 to 01
79	[Natural Size]	s	n, a5	00 to 64
80	Play Saved Internal Media	s	n, a8	See Play Saved Internal Media
81	[No Signal Image]	s	n, a9	00 to 01
82	[Audio Out]	s	n, aa	00 to 02
83	[DPM Wake Up Control] / [DPM (Standby Mode) Wake Up Control]	s	n, 0b	00 to 01
84	[Fan] Failure Check	d	w	FF
85	[Apply to all inputs]	s	n, 52	01
86	[Timer Power On]	f	d	See [Timer Power On]
87	[Timer Power Off]	f	e	See [Timer Power Off]
88	LCIN008 Control	s	n, b8	See LCIN008 Control
89	[Transfer Control]	s	n, cb	See [Transfer Control]
90	Multichannel	s	n, 76	01 to 09
91	Change SetID	j	x	See Change SetID
92	[Gamma]	s	n, ad	00 to 03
93	[Black Level]	s	n, ae	00 to 02
94	[Ultra HD Deep Color]	s	n, af	See [Ultra HD Deep Color]
95	[Sync Mode]	s	n, b0	00 to 01
96	[Select Content Type]	s	n, b1	See [Select Content Type]
97	[PC/OPS Power Control]	s	n, 8b	00 to 02
98	[LED Local Dimming]	s	n, c1	00 to 01
99	[Scan Inversion]	s	n, 87	00 to 01
100	[Frame Control]	s	n, b7	00 to 01

		Command		Data (Hexadecimal)
		1	2	
101	[Average Picture Level Auto Control]	s	n, be	00 to 01
102	Read Brightness Value	m	u	FF
103	[Screen Fault Detection]	t	z	00 to 01
104	[Stereo Mode]	s	n, c2	00 to 02
105	[HDR Picture Mode]	s	n, c4	See [HDR Picture Mode]
106	[Dynamic Tone Mapping]	s	n, c5	00 to 01
107	[LED Local Dimming]	s	n, c6	00 to 03
108	[USB2 to HDBaseT]	s	n, c3	00 to 01
109	[Change Password]	s	n, a7	See [Change Password]
110	[Brightness Range Adjustment]	s	n, ab	See [Brightness Range Adjustment]
111	[Color Calibration]	s	n, d6	00 to 01
112	Automatic adjustment	j	u	01
113	Horizontal location	f	q	00 to 64
114	Vertical location	f	r	00 to 64
115	Horizontal Size	f	s	00 to 64
116	Intelligent Auto	t	i	00 to 01
117	[Genlock]	s	n, dc	00 to 01

* Note: Commands may not work when there is no external input used.

* Some commands may not be supported on some models.

Transmission/Reception Protocol

Transmission

(Command1)(Command2)( )(Set ID)( )(Data)(Cr)

* (Command1): This command is used to identify between the adjustment setting or the user adjustment modes.
* (Command2): This command is used to control the monitor.
* (Set ID): Used for selecting a set you want to control. A unique Set ID can be assigned to each set ranging from 1 to 1000 (01H to 3E8H) under Settings in the OSD menu. Selecting '00H' for Set ID allows the simultaneous control of all connected monitors. (The maximum value may differ depending on the model.)
* (Data): Transmits command data. Data count may increase depending on the command.
* (Cr): Carriage Return. This parameter corresponds to '0 x 0D' in ASCII code.
* ( ): White Space. This parameter corresponds to '0 x 20' in ASCII code.

Acknowledgment

(Command2)( )(Set ID)( )(OK/NG)(Data)(x)

* The product transmits an ACK (acknowledgment) based on this format when receiving normal data. At this point, if the data is FF, it indicates the present status data. If the data is in data write mode, it returns the data of the PC computer.
* If a command is sent with Set ID '00' (=0 x 00), the data is reflected to all monitors and they do not send an acknowledgment (ACK).
* If you send "FF" as the value of the data in control mode via RS-232C, you can check the value currently set for the relevant feature (not applicable to some features).
* Some commands may not be supported on some models.

01. [Power] (Command: k a)

Controls the power on/off status of the monitor.

Transmission
(k)(a)( )(Set ID)( )(Data)(Cr)

Data 00: [Off]
01: [On]
02: Restart

Acknowledgment
(a)( )(Set ID)( )(OK/NG)(Data)(x)

* The Acknowledgment signal is returned properly only when the monitor is fully powered on.
* There may be a delay between the Transmission and Acknowledgment signals.
* This feature may not be available for all models.

02. Select Input (Command: x b)

Selects an input signal.

Transmission
(x)(b)( )(Set ID)( )(Data)(Cr)

Data 20: AV
40: COMPONENT
60: RGB
70: DVI-D (Normal)
80: DVI-D (Video)
90: HDMI1 (Video)
A0: HDMI1 (Normal)
91: HDMI2 (Video)
A1: HDMI2 (Normal)
92: OPS/HDMI3/DVI-D (Video)
A2: OPS/HDMI3/DVI-D (Normal)
93: HDMI4 (Video)
A3: HDMI4 (Normal)
95: OPS/DVI-D (Video)
A5: OPS/DVI-D (Normal)
96: HDMI3/DVI-D (Video)
A6: HDMI3/DVI-D (Normal)
97: HDMI3/HDMI2/DVI-D (Video)
A7: HDMI3/HDMI2/DVI-D (Normal)
98: OPS (Video)
A8: OPS (Normal)
99: HDMI2/OPS (Video)
A9: HDMI2/OPS (Normal)
C0: DISPLAYPORT (Video)
D0: DISPLAYPORT (Normal)
C1: DISPLAYPORT/USB-C (Video)
D1: DISPLAYPORT/USB-C (Normal)
C2: HDMI3 (Video)
D2: HDMI3 (Normal)
C3: HDBaseT (Video)
D3: HDBaseT (Normal)
E0: SuperSign webOS Player
E1: Others
E2: Multi Screen
E3: Play via URL
E8: SI App
F0: SDI 1
F1: SDI 2
F2: SDI 3
F3: SDI 4
F4: SDI DUAL 12
F5: SDI DUAL 34
F6: SDI QUAD AUTO
F7: SDI QUAD 2SI
F8: SDI QUAD SQUARE
F9: SDI QUAD VIEW
FA : ST2110 A
FB : ST2110 B
FC : ST2110 C
FD : ST2110 D

Acknowledgment
(b)( )(Set ID)( )(OK/NG)(Data)(x)

* Some input signals may not be available for all models.
* If it is not distributed from SuperSign W, WebOS Player returns NG.
* If it says “Read” from the IDB mode, it will respond as a PC Label type.
* The SI App only supports Set operations over RS232C.
* In models after webOS22, PC Label is displayed as Text and DTV Label is displayed as Video.
* In models after webOS23, Text Label is displayed as Normal.

03. [Aspect Ratio] (Command: k c)

Adjusts the aspect ratio of your monitor.

Transmission
(k)(c)( )(Set ID)( )(Data)(Cr)

Data 02: [Full Screen]
06: [Original]

Acknowledgment
(c)( )(Set ID)( )(OK/NG)(Data)(x)

* The aspect ratio may differ depending on the model's input configuration.

04. [Brightness Control] (Command: j q)

Sets the brightness of your monitor.

Transmission
(j)(q)( )(Set ID)( )(Data)(Cr)

Data 00: [Off]
01: [Minimum]
02: [Medium]
03: [Maximum]
04: [Auto]

Acknowledgment
(q)( )(Set ID)( )(OK/NG)(Data)(x)

* This feature may not be available for all models.

05. [Picture Mode] (Command: d x)
Selects a picture mode.

Transmission
(d)(x)( )(Set ID)( )(Data)(Cr)

Data 00: [Mall/QSR]
01: [General]
02: [Gov./Corp.]
03: [Transportation]
04: [Education]
05: [Expert1]
08: [Auto Power Save]
11: [Calibration1], [Calibration2]
12: [Hospital]

Acknowledgment
(x)( )(Set ID)( )(OK/NG)(Data)(x)

* Some picture modes may not be available for all models.

06. [Contrast] (Command: k g)
Adjusts the screen contrast.

Transmission
(k)(g)( )(Set ID)( )(Data)(Cr)

Data 00-64: Contrast 0-100

Acknowledgment
(g)( )(Set ID)( )(OK/NG)(Data)(x)

07. [Brightness] (Command: k h)
Adjusts the screen brightness.

Transmission
(k)(h)( )(Set ID)( )(Data)(Cr)

Data 00-64: Brightness 0-100

Acknowledgment
(h)( )(Set ID)( )(OK/NG)(Data)(x)

08. [Sharpness] (Command: k k)
Adjusts the screen sharpness.

Transmission
(k)(k)( )(Set ID)( )(Data)(Cr)

Data 00-32: Sharpness 0-50

Acknowledgment
(k)( )(Set ID)( )(OK/NG)(Data)(x)

09. [Color] (Command: k i)
Adjusts the screen colors.

Transmission
(k)(i)( )(Set ID)( )(Data)(Cr)

Data 00-64: Color 0-100

Acknowledgment
(i)( )(Set ID)( )(OK/NG)(Data)(x)

10. [Tint] (Command: k j)
Adjusts the screen tints.

Transmission
(k)(j)( )(Set ID)( )(Data)(Cr)

Data 00-64: Tint Red 50-Green 50

Acknowledgment
(j)( )(Set ID)( )(OK/NG)(Data)(x)

11. [Color Temperature] (Command: x u)
Adjusts the screen color temperature.

Transmission
(x)(u)( )(Set ID)( )(Data)(Cr)

Data 70-D2: 3200K-13000K

Acknowledgment
(u)( )(Set ID)( )(OK/NG)(Data)(x)

12. [Balance] (Command: k t)
Adjusts the sound balance.

Transmission
(k)(t)( )(Set ID)( )(Data)(Cr)
Data 00-64: Left 50-Right 50

Acknowledgment
(t)( )(Set ID)( )(OK/NG)(Data)(x)

* This feature may not be available for all models.

13. [Sound Mode] (Command: d y)
Selects a sound mode.

Transmission
(d)(y)( )(Set ID)( )(Data)(Cr)
Data 01: [Standard]
02: [Music]
03: [Cinema]
04: [Sports]
05: [Game]
08: [AI Sound Pro]
0A: [Clear Voice]

Acknowledgment
(y)( )(Set ID)( )(OK/NG)(Data)(x)

* This feature may not be available for all models.

14. [Mute on] (Command: k e)
Mutes/unmutes audio.

Transmission
(k)(e)( )(Set ID)( )(Data)(Cr)
Data 00: [Mute] (Volume off)
01: Mute off (Volume on)

Acknowledgment
(e)( )(Set ID)( )(OK/NG)(Data)(x)

* This feature may not be available for all models.

15. Volume Control (Command: k f)
Adjusts the playback volume.

Transmission
(k)(f)( )(Set ID)( )(Data)(Cr)
Data 00-64: Volume 0-100

Acknowledgment
(f)( )(Set ID)( )(OK/NG)(Data)(x)

* This feature may not be available for all models.

16. [Current Time] 1 (year/month/day) (Command: f a)
Sets the Clock 1 (year/month/day) values and Auto Time.

Transmission
1. (f)(a)( )(Set ID)( )(Data1)( )(Data2)( )(Data3)(Cr)
2. (f)(a)( )(Set ID)( )(0)(0)( )(Data1)(Cr)
1. When setting Clock 1 (year/month/day)
Data1 00-: 2010 -
Data2 01-0C: January - December
Data3 01-1F: 1-31

* The minimum and maximum values for (Data1) differ depending on the product's release year.
* Enter "fa (Set ID) ff" to view Clock 1 (year/month/day) settings.

2. When Setting Auto Time
Data1 00: [Auto]
01: [Manual]

* To view the set value of the Auto time, enter “fa (Set ID) 00 ff”.

Acknowledgment
1. (a)( )(Set ID)( )(OK/NG)(Data1)(Data2)(Data3)(x)
2. (a)( )(Set ID)( )(OK/NG)(0)(0)(Data1)(x)

17. [Current Time] 2 (hour/minute/second) (Command: f x)

Sets the Clock 2 values (hour/minute/second).

Transmission
(f)(x)( )(Set ID)( )(Data1)( )(Data2)( )(Data3)(Cr)

Data1 00-17: 00-23 hours
Data2 00-3B: 00 - 59 minutes
Data3 00-3B: 00-59 seconds

* Enter "fx (Set ID) ff" to view the Time 2 (hour/minute/second) settings.
* This feature is only available when Clock 1 (year/month/day) has been set.

Acknowledgment
(x)( )(Set ID)( )(OK/NG)(Data1)(Data2)(Data3)(x)

18. [No Signal Power Off (15 Min)] (Command: f g)

Sets the monitor to enter Automatic Standby mode if there is no signal for 15 minutes.

Transmission
(f)(g)( )(Set ID)( )(Data)(Cr)

Data 00: [Off]
01: [On]

Acknowledgment
(g)( )(Set ID)( )(OK/NG)(Data)(x)

19. [No IR Power Off (4 hour)] (Command: m n)

Activates Auto Power Off when there is no IR signal for 4 hours.

Transmission
(m)(n)( )(Set ID)( )(Data)(Cr)

Data 00: [Off]
01: [On]

Acknowledgment
(n)( )(Set ID)( )(OK/NG)(Data)(x)

20. [Language] (Command: f i)

Sets the OSD language.

Transmission
(f)(i)( )(Set ID)( )(Data)(Cr)

Data 00: Czech
01: Danish
02: German
03: English
04: Spanish (Europe)
05: Greek
06: French
07: Italian
08: Dutch
09: Norwegian
0A: Portuguese
0B: Portuguese (Brazil)
0C: Russian
0D: Finnish
0E: Swedish
0F: Korean
10: Chinese (Mandarin)
11: Japanese
12: Chinese (Cantonese)
13: Arabic
14: Turkish
15: Polish

Acknowledgment
(i)( )(Set ID)( )(OK/NG)(Data)(x)

* Some languages may not be available for all models.

21. [Default] Settings (Command: f k)

Executes Reset.
(Initialize Screen can only be executed in RGB input mode.)

Transmission
(f)(k)( )(Set ID)( )(Data)(Cr)

Data 00: [Picture Reset]
02: [Reset to Initial Settings]

Acknowledgment
(k)( )(Set ID)( )(OK/NG)(Data)(x)

* This feature may not be available for all models.

22. Current Temperature (Command: d n)

Checks the current temperature of the product.

Transmission
(d)(n)( )(Set ID)( )(Data)(Cr)

Data FF: Status Check

Acknowledgment
(n)( )(Set ID)( )(OK/NG)(Data)(x)

* The temperature is displayed in hexadecimal.

23. [Key] (Command: m c)

Sends a key code for the IR remote control.

Transmission
(m)(c)( )(Set ID)( )(Data)(Cr)

Data IR_KEY_CODE

Acknowledgment
(c)( )(Set ID)( )(OK/NG)(Data)(x)

* For key codes, see IR Codes.
* Some key codes may not be supported depending on the model.

24. Time Elapsed (Command: d l)

Displays the time that has elapsed after your monitor has turned on.

Transmission
(d)(l)( )(Set ID)( )(Data)(Cr)

Data FF: Read status

Acknowledgment
(l)( )(Set ID)( )(OK/NG)(Data)(x)

* The data received is displayed in hexadecimal.

25. Product Serial Number Check (Command: f y)

Checks the serial number of the product.

Transmission
(f)(y)( )(Set ID)( )(Data)(Cr)

Data FF: Check product serial number

Acknowledgment
(y)( )(Set ID)( )(OK/NG)(Data)(x)

* Data is in ASCII format.

26. [Software Version] (Command: f z)

Checks the software version of the product.

Transmission
(f)(z)( )(Set ID)( )(Data)(Cr)

Data FF: Check the software version

Acknowledgment
(z)( )(Set ID)( )(OK/NG)(Data)(x)

27. [White Balance] Red Gain (Command: j m)
Adjusts the red gain value for white balance.

Transmission
(j)(m)( )(Set ID)( )(Data)(Cr)
Data 00-FE: Red Gain 0-254
FF: Checks red gain value

Acknowledgment
(m)( )(Set ID)( )(OK/NG)(Data)(x)

28. [White Balance] Green Gain (Command: j n)
Adjusts the green gain value for white balance.

Transmission
(j)(n)( )(Set ID)( )(Data)(Cr)
Data 00-FE: Green Gain 0-254
FF: Checks green gain value

Acknowledgment
(n)( )(Set ID)( )(OK/NG)(Data)(x)

29. [White Balance] Blue Gain (Command: j o)
Adjusts the blue gain value for white balance.

Transmission
(j)(o)( )(Set ID)( )(Data)(Cr)
Data 00-FE: Blue Gain 0-254
FF: Checks blue gain value

Acknowledgment
(o)( )(Set ID)( )(OK/NG)(Data)(x)

30. [White Balance] Red Offset (Command: s x)
Adjusts the red offset value for white balance.

Transmission
(s)(x)( )(Set ID)( )(Data)(Cr)
Data 00-7F: Red Offset 0-127
FF: Checks red offset value

Acknowledgment
(x)( )(Set ID)( )(OK/NG)(Data)(x)

31. [White Balance] Green Offset (Command: s y)
Adjusts the green offset value for white balance.

Transmission
(s)(y)( )(Set ID)( )(Data)(Cr)
Data 00-7F: Green Offset 0-127
FF: Checks green offset value

Acknowledgment
(y)( )(Set ID)( )(OK/NG)(Data)(x)

32. [White Balance] Blue Offset (Command: s z)
Adjusts the blue offset value for white balance.

Transmission
(s)(z)( )(Set ID)( )(Data)(Cr)
Data 00-7F: Blue Offset 0-127
FF: Checks blue offset value

Acknowledgment
(z)( )(Set ID)( )(OK/NG)(Data)(x)

33. [Backlight] (Command: m g)

Adjusts the backlight brightness.

Transmission
(m)(g)( )(Set ID)( )(Data)(Cr)

Data 00-64: Backlight 0-100

Acknowledgment
(g)( )(set ID)()(OK/NG)(Data)(x)

* The LED Light of the LED model uses the corresponding command.

34. [Screen Off] (Command: k d)

Turns off/off the screen.

Transmission
(k)(d)( )(Set ID)( )(Data)(Cr)

Data 00: Screen On
01: Screen Off

Acknowledgment
(d)( )(Set ID)( )(OK/NG)(Data)(x)

* This feature may not be available for all models.

35. [Tile Mode] (Command: d d)

Sets a tile mode and values for the tile rows and columns.

Transmission
(d)(d)( )(Set ID)( )(Data)(Cr)

Data 00-FF: The first byte - tile column
The second byte - tile row

* 00, 01, 10, and 11 mean that the tile mode is off.
* The maximum value may differ depending on the model.

Acknowledgment
(d)( )(Set ID)( )(OK/NG)(Data)(x)

* This feature may not be available for all models.
* If you change the values on a Video Wall model, please reboot for it to work normally.

36. [Tile Mode] Check (Command: d z)

Checks the tile mode.

Transmission
(d)(z)( )(Set ID)( )(Data)(Cr)

Data FF: Check Tile Mode

Acknowledgment
(z)( )(Set ID)( )(OK/NG)(Data1)(Data2)(Data3)(x)

Data1 00: Tile Mode off
01: Tile Mode on
Data2 00-0F: Tile column
Data3 00-0F: Tile row

* This feature may not be available for all models.

37. [Tile ID] (Command: d i)

Sets the tile ID value of the product.

Transmission
(d)(i)( )(Set ID)( )(Data)(Cr)

Data 01-E1: Tile ID 1-225
FF: Checks the Tile ID

* The data value cannot exceed the value of row x column.

Acknowledgment
(i)( )(Set ID)( )(OK/NG)(Data)(x)

* If you enter a value that exceeds the value of row x column for the Data parameter (except for 0xFF), Ack becomes NG.
* This feature may not be available for all models.
* If you change the values on a Video Wall model, please reboot for it to work normally.

38. [Natural Mode] (In Tile Mode) (Command: d j)

To display the image naturally, the part of the image that would normally be displayed in the gap between the monitors is omitted.

Transmission
(d)(j)( )(Set ID)( )(Data)(Cr)

Data 00: [Off]
01: [On]

Acknowledgment
(j)( )(Set ID)( )(OK/NG)(Data)(x)

* This feature may not be available for all models.

39. [DPM] / [DPM (Standby Mode)] (Command: f j)

Sets the DPM(Display Power Management) function.

Transmission
(f)(j)( )(Set ID)( )(Data)(Cr)

Data 00: [Off]
02: 10 seconds
04: 1 minute
05: 3 minutes
06: 5 minutes
07: 10 minutes

Acknowledgment
(j)( )(Set ID)( )(OK/NG)(Data)(x)

* This feature may not be available for all models.

40. Remote Control/Local Key Operation Lock (Command: k m)

Adjusts the remote control/local key (front) lock.

Transmission
(k)(m)( )(Set ID)( )(Data)(Cr)

Data 00: [Off] (Lock Off)
01: [On] (Lock On)

* When the monitor is turned off, the power key works even in On (01) mode.

Acknowledgment
(m)( )(Set ID)( )(OK/NG)(Data)(x)

* This feature may not be available for all models.

41. [Power On Delay] (Command: f h)

Sets the schedule delay for when the power turns on. (Unit: seconds)

Transmission
(f)(h)( )(Set ID)( )(Data)(Cr)

Data 00-FA: Min 0- Max 250 (sec)

Acknowledgment
(h)( )(Set ID)( )(OK/NG)(Data)(x)

* The maximum value may differ depending on the model.

42. [Fail Over] Mode (Command: m i)

Selects the Fail Over mode.

Transmission
(m)(i)( )(Set ID)( )(Data)(Cr)

Data 00: [Off]
01: [Auto]
02: [User Settings]

Acknowledgment
(i)( )(Set ID)( )(OK/NG)(Data)(x)

43. [Fail Over] Input (Command: m j)

Selects an input source for fail over. (This feature is only available when Fail Over is set to Custom.)

Transmission
(m)(j)( )(Set ID)( )(Data1)( )(Data2)( )(Data3)( )
(Data4)...( )(DataN)(Cr)

Data1-N (Input priority 1-N)
60: RGB
70: DVI-D
90: HDMI1
91: HDMI2
92: OPS/HDMI3/DVI-D
93: HDMI4
95: OPS/DVI-D
96: HDMI3/DVI-D
97: HDMI3/HDMI2/DVI-D
98: OPS
99: HDMI2/OPS
C0: DISPLAYPORT
C1: DISPLAYPORT/USB-C
C2: HDMI3
C3: HDBaseT

Acknowledgment
(j)( )(Set ID)( )(OK/NG)(Data1)(Data2)(Data3)
(Data4)...(DataN)(x)

* Some input signals may not be available for all models.
* The data number (N) may vary depending on the model. (The data number depends on the number of supported input signals.)
* The data set as input priority is supported data in Video label format.

44. Remote Control Key Lock (Command: t p)

Configures the settings of the product's remote control key.

Transmission

(t)(p)( )(Set ID)( )(Data)(Cr)

Data 00: Unlocks all keys
01: Locks all keys except Power key
02: Locks all keys

Acknowledgment

(p)( )(Set ID)( )(OK/NG)(Data)(x)

* When the monitor is turned off, the power key works even in the locks on all of the keys (02) mode.

45. [Local Key Operation Lock] (Command: t o)

Configures the local key operation settings of the product.

Transmission

(t)(o)( )(Set ID)( )(Data)(Cr)

Data 00: Unlocks all keys
01: Locks all keys except Power key
02: Locks all keys

Acknowledgment

(o)( )(Set ID)( )(OK/NG)(Data)(x)

* When the monitor is turned off, the power key works even in the locks on all of the keys (02) mode.
* This feature may not be available for all models.

46. Status Check (Command: s v)

Checks the current signal of the product.

Transmission

(s)(v)( )(Set ID)( )(Data)( )(FF)(Cr)

Data 02: Check whether there is a signal
03: Check whether the monitor is in PM Mode
07: Check whether the Top, Bottom and Main temperature sensors are functioning normally.
09: Fan Speed
10: RGB Sensing OK/NG (screen fault detection)
16: Check the humidity value
17: Check the value of the intensity of illumination
18: Check the status value of the slope of the product

Acknowledgment

(v)( )(Set ID)( )(OK/NG)(Data)(Data1)(x)

Data 02 (when a signal is found)
Data1 00: No signal
01: Signal present

Data 03 (when the monitor is currently in PM mode)
Data1 00: Screen is on
01: Screen is off
02: Screen Off Always is activated
03: Sustain Aspect Ratio is activated
04: Screen Off & Backlight On is activated

Data 07 (when checking whether the Top, Bottom and Main temperature sensors are working properly)
Data1 00: All temperature sensors are faulty
01: Top normal, Bottom faulty, Main faulty
02: Top faulty, Bottom normal, Main faulty
03: Top normal, Bottom normal, Main faulty
04: Top faulty, Bottom faulty, Main normal
05: Top normal, Bottom faulty, Main normal
06: Top faulty, Bottom normal, Main normal
07: All temperature sensors are normal
Data 10 (when executing Screen Fault Detection)
Data 1 00: Screen Fault Detection result NG
07: Screen Fault Detection result OK

* When screen Fault Detection is set to Off or not supported, execution results are rendered "NG."

Data 16 (for checking the humidity value)
Data 1 0~100: Reads the %RH value of the current humidity (indicated as a Hex value).

Data 17 (for checking the value of the intensity of illumination)
Data 1 1~1000: Reads the Lux value of the current intensity of illumination (indicated as a Hex value).

Data 18 (for checking the status value of the slope of the product)
Data 1 00: 0 degrees
01: 90 degrees
02: 180 degrees
03: 270 degrees
04: Fallen forward
05: Fallen backward

Data 09 (when checking the fan speed)

Acknowledgment
(v)( )(Set ID)( )(OK/NG)(Data)(Data1_1)(Data1_2)
...(DataN_1)(DataN_2)(x)

Data1_1: 00~ff: First fan speed top 1 Byte
Data1_2: 00~ff: First fan speed bottom 1 Byte
...
DataN_1: 00~ff: Nth fan speed top 1 Byte
DataN_2: 00~ff: Nth fan speed bottom 1 Byte

Fan Speed: Hex 0~2008, Decimal 0~8200

* The data number (N) may vary depending on the model.
* This feature may not be available for all models.

47. [Daylight Saving Time] (Command: s d)

Sets Daylight Savings Time.

Transmission
(s)(d)( )(Set ID)( )(Data1)( )(Data2)( )
(Data3)( )(Data4)( )(Data5)( )(Cr)

Data1 00: Off (Data2-5: FF)
01: Start Time
02: End Time
Data2 01~0C: January - December
Data3 01-06: Week 1 - 6

* The maximum value of (Data3) may vary depending on the date.

Data4 00-06: (Sunday - Saturday)
Data5 00-17: 00 - 23 hours

* If you wish to read the start/end times, enter FF for parameters (Data2) through (Data5).
(Example 1: sd 01 01 ff ff ff ff - Checks the start time.)
(Example 2: sd 01 02 ff ff ff ff - Checks the end time.)

* This feature only works when Clock 1 (year/month/day) and Clock 2 (hour/minute/second) have been set.

Acknowledgment
(d)( )(Set ID)( )(OK/NG)(Data1)(Data2)
(Data3)(Data4)(Data5)(x)

* This feature may not be available for all models.

48. [PM Mode] (Command: s n, 0c)

Sets the PM mode.

Transmission
(s)(n)( )(Set ID)( )(0c)( )(Data)(Cr)

Data 00: [Power Off] (Basic)
01: [Sustain Aspect Ratio]
02: [Screen Off]
03: [Screen Off Always]
04: [Screen Off & Backlight On]
05: [Network Ready]

Acknowledgment
(n)( )(Set ID)( )(OK/NG)(0c)(Data)(x)

* This feature may not be available for all models.

49. [ISM Method] (Command: j p)

Selects an ISM method.

Transmission
(j)(p)( )(Set ID)( )(Data)(Cr)

Data 02: [Orbiter]
04: [White Wash]
08: [Off]
90: [User Image]
91: [User Video]

Acknowledgment
(p)( )(Set ID)( )(OK/NG)(Data)(x)

* This feature may not be available for all models.
* "02: [Orbiter]" is not supported while "91: [User Video]" is turned on.

50. [Network Settings] (Command: s n, 80 or 81 or 82)

Configures network and DNS settings.

Transmission
(s)(n)( )(Set ID)( )(Data1)( )(Data2)( )
(Data3)( )(Data4)( )(Data5)(Cr)

Data1 80: Configures/views the temporary IP mode (Auto/Manual), subnet mask, and gateway.
81: Configures/views the temporary DNS address.
82: Saves temporary settings and views information about the current network.

* If Data1 is 80,
  Data2 00: Auto
  01: Manual
  FF: Views the temporary IP mode (Auto/Manual), subnet mask, and gateway.
* If Data2 is 01 (Manual),
  Data3 Manual IP address
  Data4 Subnet mask address
  Data5 Gateway address

* If Data1 is 81,
  Data2 DNS address
  FF: Displays the temporary DNS address.
* If Data1 is 82,
  Data2 80: Applies the temporary IP mode (Auto/Manual), subnet mask, and gateway.
  81: Applies the temporary DNS address
  FF: Information on the current network (IP, subnet gateway and DNS)

* An example of settings,

1. Auto: sn 01 80 00
2. Manual: sn 01 80 01 010177223241 255255254000 010177222001(IP:10.177.223.241, subnet: 255.255.254.0, gateway: 10.177.222.1)
3. Network read: sn 01 80 ff
4. DNS setting: sn 01 81 156147035018 (DNS: 156.147.35.18)
5. Applying the settings: sn 01 82 80 (applies the saved IP mode (auto/manual), subnet mask, and gateway), sn 01 82 81 (applies the saved DSN)

* Each IP address contains 12 decimal digits.

Acknowledgment
(n)( )(Set ID)( )(OK/NG)(Data1)(Data)(x)

* This feature is available only for wired networks.
* This feature may not be available for all models.

51. [Power On Status] (Command: t r)

Sets the Power On status of the monitor.

Transmission
(t)(r)( )(Set ID)( )(Data)(Cr)

Data 00: [LST(Last Status)]
01: [STD(Standby)]
02: [PWR(Power On)]

Acknowledgment
(r)( )(Set ID)( )(OK/NG)(Data)(x)

52. Wired [Wake On LAN] / [Wake On LAN (Networked Standby Mode)] (Command: f w)

Selects a Wired Wake On LAN option.

Transmission
(f)(w)( )(Set ID)( )(Data)(Cr)

Data 00: [Off]
01: [On]

Acknowledgment
(w)( )(Set ID)( )(OK/NG)(Data)(x)

53. [Screen Rotation] (Command: t h)

Sets the Screen Rotation feature.

Transmission
(t)(h)( )(Set ID)( )(Data) (Cr)

Data 00: [Off]
01: 90 degrees
02: 270 degrees
03: 180 degrees

Acknowledgment
(h)( )(Set ID)( )(OK/NG)(Data)(x)

* This feature may not be available for all models.

54. [Time Sync] (Command: s n, 16)

Sets Time Sync.

Transmission

(s)(n)( )(Set ID)( )(1)(6)( )(Data)(Cr)

Data 00: [Off]
01: [On]

* This feature only works when the monitor is in Master mode.
* This feature does not work if the current time is not set.

Acknowledgment

(n)( )(Set ID)( )(OK/NG)(1)(6)(Data)(x)

* This feature may not be available for all models.

55. [Contents Sync] (Command: t g)

Sets Content Sync.

Transmission

(t)(g)( )(Set ID)( )(Data)(Cr)

Data 00: [Off]
01: [On]

Acknowledgment

(g)( )(Set ID)( )(OK/NG)(Data)(x)

* This feature may not be available for all models.

56. [LAN Daisy Chain] (Command: s n, 84)

Turns on/off LAN Daisy Chain.

Transmission

(s)(n)( )(Set ID)( )(8)(4)( )(Data)(Cr)

Data 00: [Off]
01: [On]

Acknowledgment

(n)( )(Set ID)( )(OK/NG)(8)(4)(Data)(x)

* This feature may not be available for all models.

57. [External Input Rotation] (Command: s n, 85)

Sets the External Input Rotation feature.

Transmission

(s)(n)( )(Set ID)( )(8)(5)( )(Data)(Cr)

Data 00: [Off]
01: 90 degrees
02: 270 degrees
03: 180 degrees

Acknowledgment

(n)( )(Set ID)( )(OK/NG)(8)(5)(Data)(x)

* This feature may not be available for all models.

58. [Beacon] (Command: s n, 88)

Turns on/off Beacon.

Transmission

(s)(n)( )(Set ID)( )(8)(8)( )(Data)(Cr)

Data 00: [Off]
01: [On]

Acknowledgment

(n)( )(Set ID)( )(OK/NG)(8)(8)(Data)(x)

* This feature may not be available for all models.

59. [Brightness Scheduling] Mode (Command: s m)

Selects a Brightness Scheduling mode.

Transmission

(s)(m)( )(Set ID)( )(Data)(Cr)

Data 00: [Off]
01: [On]

Acknowledgment

(m)( )(Set ID)( )(OK/NG)(Data)(x)

* This feature does not work if the current time is not set.
* This feature may not be available for all models.

60. [Brightness Scheduling] (Command: s s)

Sets Brightness Scheduling.

Transmission
(s)(s)( )(Set ID)( )(Data1)( )(Data2)( )(Data3)(Cr)

Data 1
1. f1 to f6 (data reading)
F1: Reads the 1st brightness schedule's data
F2: Reads the 2nd brightness schedule's data.
F3: Reads the 3rd brightness schedule's data.
F4: Reads the 4th brightness schedule's data.
F5: Reads the 5th brightness schedule's data.
F6: Reads the 6th brightness schedule's data.

2. FF: Reads all stored lists

3. e1 to e6 (Deletes one index), e0 (Deletes all indexes)
E0: Deletes all brightness schedules.
E1: Deletes the 1st brightness schedule.
E2: Deletes the 2nd brightness schedule.
E3: Deletes the 3rd brightness schedule.
E4: Deletes the 4th brightness schedule.
E5: Deletes the 5th brightness schedule.
E6: Deletes the 6th brightness schedule.

4. 00-17: 00 - 23 hours
Data 2 00-3B: 00 - 59 minutes
Data 3 00~64: Backlight 0 - 100

* To read or delete a brightness schedule you have set, (Data2)(Data3) must be set to FF.
* If you want to read all configured brightness schedules through FF, do not enter any values in (Data2)(Data3).
* When retrieving all items of the set Brightness Scheduling list through FF, OK will be acknowledged (ACK) even if there is no saved list.

ex1: ss 01 f1 ff ff – Reads the 1st index data in Brightness Schedule.
ex2: ss 01 ff - Reads all index data in Brightness Schedule.
ex3: ss 01 e1 ff ff – Deletes the 1st index data in Brightness Schedule.
ex4: ss 01 07 1E 46 - Adds a schedule whose time is 07:30 and whose backlight is 70.

Acknowledgment
(s)( )(Set ID)( )(OK/NG)(Data1)(Data2)(Data3)(x)

* This feature may not be available for all models.

61. [Multi Screen] Mode & Input (Command: x c)

Saves and controls Multi Screen modes and inputs.

Transmission
(x)(c)( )(Set ID)( )(Data1)( )(Data2)( )(Data3)( )(Data4)( )(Data5)( )(Cr)

Data1 (Sets MultiScreen mode)
10: PIP
22: PBP2
23: PBP3
24: PBP4
25: PBP3 (1:2:1)
Data2 (Sets the Main input of Multi screen)
Data3 (Sets the Sub1 input of Multi screen)
Data4 (Sets the Sub2 input of Multi screen)
Data5 (Sets the Sub3 input of Multi screen)
80: DVI-D
90: HDMI1
91: HDMI2
92: OPS/HDMI3/DVI-D
93: HDMI4
95: OPS/DVI-D
96: HDMI3/DVI-D
97: HDMI3/HDMI2/DVI-D
98: OPS
99: HDMI2/OPS
C0: DISPLAYPORT
C1: DISPLAYPORT/USB-C
C2: HDMI3
C3: HDBaseT

Acknowledgment
(c)( )(Set ID)( )(OK/NG)( )(Data1)(Data2)(Data3)(Data4)(Data5)(x)

* This feature may not be available for all models.
* Only the input modes supported by the model works.
* This feature operates as the last input, and supports data in Video format.
* When the Read operation is performed, 00 is returned if it is not for an external input.

62. [Aspect Ratio] (Multi Screen) (Command: x d)

Controls the aspect ratio of Multi Screen.

Transmission
(x)(d)( )(Set ID)( )(Data1)( )(Data2)(Cr)

Data1 01: Controls the Main input
02: Controls the Sub1 input
03: Controls the Sub2 input
04: Controls the Sub3 input
Data2 00: Full Screen
01: Original

Acknowledgment
(d)( )(Set ID)( )(OK/NG)(Data1)(Data2)(x)

* This feature may not be available for all models.

63. [Screen Off] (Multi Screen) (Command: x e)

Turns on/off each screen in the Multi Screen.

Transmission
(x)(e)( )(Set ID)( )(Data1)( )(Data2)(Cr)

Data1 01: Controls the Main input
02: Controls the Sub1 input
03: Controls the Sub2 input
04: Controls the Sub3 input
Data2 00: Screen On
01: Screen Off

* This feature only works when the Multi Screen app is running.
* This feature does not work when there is no signal.

Acknowledgment
(e)( )(Set ID)( )(OK/NG)(Data1)(Data2)(x)

* This feature may not be available for all models.

64. [Screen Off Always] (Command: s n, 0d)

If you activate the Screen Off Always feature, the monitor enters Screen Off mode regardless of whether or not you have activated PM mode.

Transmission
(s)(n)( )(Set ID)( )(0)(d)( )(Data)(Cr)

Data 00: [Off]
01: [On]

Acknowledgment
(n)( )(Set ID)( )(OK/NG)(0)(d)(Data)(x)

* This feature may not be available for all models.

65. Stop Video (Command: k x)

Controls Stop Video.

Transmission
(k)(x)( )(Set ID)( )(Data)(Cr)

Data 00: The Stop Video feature is on.
01: The Stop Video feature is off.

* This feature only works in single input mode.

Acknowledgment
(x)( )(Set ID)( )(OK/NG)(Data)(x)

* This feature may not be available for all models.

66. Wireless [Wake On LAN] / [Wake On LAN (Networked Standby Mode)] (Command: s n, 90)

Sets the Wireless Wake-on-LAN feature.

Transmission
(s)(n)( )(Set ID)( )(9)(0)( )(Data)(Cr)

Data 00: [Off]
01: [On]

Acknowledgment
(n)( )(Set ID)( )(OK/NG)(9)(0)(Data)(x)

* This feature may not be available for all models.

67. [OSD Lock] (Command: k l)

Sets OSD Lock.

Transmission
(k)(l)( )(Set ID)( )(Data)(Cr)

Data 00: OSD Lock
01: Unlock OSD Lock

Acknowledgment
(l)( )(Set ID)( )(OK/NG)(Data)(x)

68. [HDMI IT Content] (Command: s n, 99)

Automatically sets the picture mode based on HDMI data.

Transmission
(s)(n)( )(Set ID)( )(9)(9)( )(Data)(Cr)

Data 00: [Off]
01: [On]

Acknowledgment
(n)( )(Set ID)( )(OK/NG)(9)(9)(Data)(x)

* This feature may not be available for all models.

69. [Holiday Setting] (Command: s n, 9b)

Sets holidays.

Transmission
1. (s)(n)( )(Set ID)( )(9)(b)( )
(Data1)( )(Data2)( )(Data3)( )
(Data4)( )(Data5)( )(Data6)(Cr)
2. (s)(n)( )(Set ID)( )(9)(b)( )(Data1)( )(Data2)(Cr)
3. (s)(n)( )(Set ID)( )(9)(b)( )(Data1)(Cr)

1. Setting a Holiday

Data1 Start year
00-: 2010-
Data2 Start month
01 - 0c: January - December
Data3 Start date
01 - 1F: 01-31
Data4 For how long from the start year/month/date
01-07: For 1 to 7 days
Data5 Repetition
00: None
01: Every month
02: Every Year
Data6 Repeats the schedule on a date/day-of-the-week basis.
01: On a date basis.
02: On a day-of-the-week basis.

* The minimum and maximum values for (Data1) differ depending on the product's release year.
* You can input a value for (Data 6) only when a value has already been set for (Data 5) (every year or every month).

2. Checking a Schedule

Data1 Select the desired schedule.
F1: Reads the 1st schedule
F2: Reads the 2nd schedule
F3: Reads the 3rd schedule
F4: Reads the 4th schedule
F5: Reads the 5th schedule
F6: Reads the 6th schedule
F7: Reads the 7th schedule
Data2
FF

3. Deleting a Schedule

E0: Deletes all holiday schedules
E1: Deletes the 1st holiday schedule
E2: Deletes the 2nd holiday schedule
E3: Deletes the 3rd holiday schedule
E4: Deletes the 4th holiday schedule
E5: Deletes the 5th holiday schedule
E6: Deletes the 6th holiday schedule
E7: Deletes the 7th holiday schedule

* This feature does not work if the current time is not set.

Acknowledgment
1. (n)( )(Set ID)( )(OK/NG)(9)(b)
(Data1)(Data2)(Data3)(Data4)(Data5)(Data6)(x)
2. (n)( )(Set ID)( )(OK/NG)(9)(b)(f)(1~7)
(Data1)(Data2)(Data3)(Data4)(Data5)(Data6)(x)
3. (n)( )(Set ID)( )(OK/NG)(9)(b)(Data1)(x)

* This feature may not be available for all models.

70. [UPnP] (Command: s n, 9c)
Sets UPnP mode.

Transmission
(s)(n)( )(Set ID)( )(9)(c)( )(Data)(Cr)

Data 00: [Off]
01: [On]

Acknowledgment
(n)( )(Set ID)( )(OK/NG)(9)(c)(Data)(x)

* This feature may not be available for all models.
* Changing UPnP mode results in a reboot.

71. [Home Dashboard Lock] (Command: s n, 9d)
Sets Home Dashboard Lock.

Transmission
(s)(n)( )(Set ID)( )(9)(d)( )(Data)(Cr)

Data 00: Home Dashboard Unlock
01: Home Dashboard Lock

Acknowledgment
(n)( )(Set ID)( )(OK/NG)(9)(d)(Data)(x)

* This feature may not be available for all models.

72. [USB Lock] (Command: s n, 9e)
Sets USB Lock.

Transmission
(s)(n)( )(Set ID)( )(9)(e)( )(Data)(Cr)

Data 00: USB Unlock
01: USB Lock

Acknowledgment
(n)( )(Set ID)( )(OK/NG)(9)(e)(Data)(x)

* This feature may not be available for all models.

73. [Wi-Fi Lock] (Command: s n, 9f)
Sets Wi-Fi Lock.

Transmission
(s)(n)( )(Set ID)( )(9)(f)( )(Data)(Cr)

Data 00: Wi-Fi Unlock
01: Wi-Fi Lock

Acknowledgment
(n)( )(Set ID)( )(OK/NG)(9)(f)(Data)(x)

* This feature may not be available for all models.

74. [Screen Share Lock] (Command: s n, a0)
Sets Screen Share Lock.

Transmission
(s)(n)( )(Set ID)( )(a)(0)( )(Data)(Cr)

Data 00: Screen Share Unlock
01: Screen Share Lock
02: Screen Share Lock (PIN)

Acknowledgment
(n)( )(Set ID)( )(OK/NG)(a)(0)(Data)(x)

* This feature may not be available for all models.
* Changing Screen Share Lock mode results in a reboot.

75. [Backup via storage] (Command: s n, a1)

Sets Backup via Storage.

Transmission
1. (s)(n)( )(Set ID)( )(a)(1)( )(Data1)(Cr)
2. (s)(n)( )(Set ID)( )(a)(1)( )(Data1)(Data2)(Cr)

1. Disabling Backup via Storage.
Data1 00: Off

2. Setting Backup via Storage to Auto
Data1 01: Auto
Data2 01: 30 minute
02: 1 hour
03: 2 hours
04: 3 hours

3. Setting Backup via Storage to Manual
Data1 02: Manual

4. Setting Backup via Storage to SuperSign Content
Data1 03: SuperSign Contents

5. Set to SI App / Play via URL
Data 1 04: [SI App] / [Play via URL]

Acknowledgment
1. (n)( )(Set ID)( )(OK/NG)(a)(1)(Data1)(x)
2. (n)( )(Set ID)( )(OK/NG)(a)(1)(Data1)(Data2)(x)

* This feature may not be available for all models.

76. [Digital Audio Input] (Command: s n, a2)

Sets Digital Audio Input.

Transmission
(s)(n)( )(Set ID)( )(a)(2)( )(Data)(Cr)
Data 00: Digital
01: Analog

Acknowledgment
(n)( )(Set ID)( )(OK/NG)(a)(2)(Data)(x)

* This feature may not be available for all models.

77. [Booting Logo Image] (Command: s n, a3)

Sets Booting Logo Image.

Transmission
(s)(n)( )(Set ID)( )(a)(3)( )(Data)(Cr)
Data 00: [Off]
01: [On]

Acknowledgment
(n)( )(Set ID)( )(OK/NG)(a)(3)(Data)(x)

* This feature may not be available for all models.

78. [SoftAP] (Command: s n, a4)

Sets SoftAP Mode.

Transmission
(s)(n)( )(Set ID)( )(a)(4)( )(Data)(Cr)
Data 00: [Off]
01: [On]

Acknowledgment
(n)( )(Set ID)( )(OK/NG)(a)(4)(Data)(x)

* This feature may not be available for all models.

79. [Natural Size] (Command: s n, a5)

Sets the Natural Size feature.

Transmission
(s)(n)( )(Set ID)( )(a)(5)( )(Data)(Cr)

Data 00-64: Natural Size 0 - 100

Acknowledgment
(n)( )(Set ID)( )(OK/NG)(a)(5)(Data)(x)

* This feature may not be available for all models.

80. Play Saved Internal Media (Command: s n, a8)

Plays media files saved on internal storage. Internal storage media: videos and images stored on the monitor's internal storage after being exported via Contents Management Player.

* Not applicable: Template content, SuperSign content, and playlist content.

Transmission
(s)(n)( )(Set ID)( )(a)(8)( )(Data)(Cr)

Data 01: Play

Acknowledgment
(n)( )(Set ID)( )(OK/NG)(a)(8)( )(Data)(x)

* This feature may not be available for all models.

81. [No Signal Image] (Command: s n, a9)

Sets the No Signal Image feature.

Transmission
(s)(n)( )(Set ID)( )(a)(9)( )(Data)(Cr)

Data 00: [Off]
01: [On]

Acknowledgment
(n)( )(Set ID)( )(OK/NG)(a)(9)(Data)(x)

* This feature may not be available for all models.

82. [Audio Out] (Command: s n, aa)

Sets Audio Out to Off/Variable/Fixed.

Transmission
(s)(n)( )(Set ID)( )(a)(a)( )(Data)(Cr)

Data 00: [Off]
01: [Variable]
02: [Fixed]

Acknowledgment
(n)( )(Set ID)( )(OK/NG)(a)(a)(Data)(x)

* This feature may not be available for all models.

83. [DPM Wake Up Control] / [DPM (Standby Mode) Wake Up Control] (Command: s n, 0b)

Controls the DPM Wake Up Control settings.

Transmission
(s)(n)( )(Set ID)( )(0)(b)( )(Data)(Cr)

Data 00: [Clock]
01: [Clock+DATA]

Acknowledgment
(n)( )(Set ID)( )(OK/NG)(0)(b)(Data)(x)

* This feature may not be available for all models.

84. [Fan] Failure Check (Command: d w)

Check the fan malfunction.

Transmission
(d)(w)( )(Set ID)( )(Data)(Cr)

Data FF: Read status

Acknowledgment
(w)( )(Set ID)( )(OK/NG)(Data1)(Data2)(x)

Data1 00: Fan failure
01: Fan normal

Data2 00: 0 faults (Fan Normal)
01: 1 fault
02: 2 faults
03: 3 faults
04: 4 faults
05: 5 faults
06: 6 faults
07: 7 faults
08: 8 faults
09: 9 faults
0A: 10 faults

* This feature may not be available for all models.

85. [Apply to all inputs] (Command: s n, 52)

Apply the video mode and low value of the current input to the same video value of all inputs.

Transmission
(s)(n)( )(Set ID)( )(5)(2)( )(Data)(Cr)

Data 01: Apply

Acknowledgment
(n)( )(Set ID)( )(OK/NG)(5)(2)(Data)(x)

* This feature may not be available for all models.
* Other commands do not work for a certain time after applying.

86. [Timer Power On] (Command: f d)

Sets On Timer settings.

Transmission
(f)(d)( )(Set ID)( )(Data1)( )(Data2)( )(Data3)(Cr)

Data1

1. f1h to f7h (data reading)
F1: Reads the 1st Timer Power On's data
F2: Reads the 2nd Timer Power On's data
F3: Reads the 3rd Timer Power On's data
F4: Reads the 4thTimer Power On's data
F5: Reads the 5th Timer Power On's data
F6: Reads the 6th Timer Power On's data
F7: Reads the 7th Timer Power On's data

2. e1h to e7h (Deletes one index), e0h (Deletes all indexes)
E0: Delete all Timer Power On's
E1: Delete the 1st Timer Power On
E2: Delete the 2nd Timer Power On
E3: Delete the 3rd Timer Power On
E4: Delete the 4th Timer Power On
E5: Delete the 5th Timer Power On
E6: Delete the 6th Timer Power On
E7: Delete the 7th Timer Power On

3. 01h to 0ch (Timer Power On days setting)
02: Repeat Daily
03: Repeat from Monday to Friday
04: Repeat from Monday to Saturday
05: Repeat from Saturday to Sunday
06: Repeat on Sunday
07: Repeat on Monday
08: Repeat on Tuesday
09: Repeat on Wednesday
0A: Repeat on Thursday
0B: Repeat on Friday
0C: Repeat on Saturday
Data2 00-17: 00 - 23 hours
Data3 00-3B: 00 - 59 minutes

* To read or delete a Timer Power On you have set, (Data2), (Data3) must be set to FF.

Example 1: fd 01 f1 ff ff - Reads the 1st index data in Timer Power On.

Example 2: fd 01 e1 ff ff - Reads the 1st index data in Timer Power On.

Example 3: fd 01 04 02 03 - Sets the Timer Power On as Monday - Saturday 02:03.

* This feature only works when Clock 1 (year/month/day) and Clock 2 (hour/minute/second) have been set.

Acknowledgment
(d)( )(Set ID)( )(OK/NG)(Data1)(Data2)(Data3)(x)

87. [Time to Off] (Command: f e)

Sets Off Timer settings.

Transmission
(f)(e)( )(Set ID)( )(Data1)( )(Data2)( )(Data3)(Cr)

Data1
1. f1h to f7h (data reading)
F1: Reads the 1st Timer Power Off's data
F2: Reads the 2nd Timer Power Off's data
F3: Reads the 3rd Timer Power Off's data
F4: Reads the 4th Timer Power Off's data
F5: Reads the 5th Timer Power Off's data
F6: Reads the 6th Timer Power Off's data
F7: Reads the 7th Timer Power Off's data

2. e1h to e7h (Deletes one index), e0h (Deletes all indexes)
E0: Delete all Timer Power Off's
E1: Delete the 1st Timer Power Off
E2: Delete the 2nd Timer Power Off
E3: Delete the 3rd Timer Power Off
E4: Delete the 4th Timer Power Off
E5: Delete the 5th Timer Power Off
E6: Delete the 6th Timer Power Off
E7: Delete the 7th Timer Power Off

3. 01h to 0ch (Timer Power Off days setting)
02: Repeat Daily
03: Repeat from Monday to Friday
04: Repeat from Monday to Saturday
05: Repeat from Saturday to Sunday
06: Repeat on Sunday
07: Repeat on Monday
08: Repeat on Tuesday
09: Repeat on Wednesday
0A: Repeat on Thursday
0B: Repeat on Friday
0C: Repeat on Saturday
Data2 00-17: 00 - 23 hours
Data3 00-3B: 00 - 59 minutes

* To read or delete a Timer Power Off you have set, (Data2), (Data3) must be set to FF.

Example 1: fe 01 f1 ff ff - Reads the 1st index data in Timer Power Off.
Example 2: fe 01 e1 ff ff - Reads the 1st index data in Timer Power Off.
Example 3: fe 01 04 02 03 - Sets the Timer Power Off as Monday - Saturday 02:03.

* This feature only works when Clock 1 (year/month/day) and Clock 2 (hour/minute/second) have been set.

Acknowledgment
(e)( )(Set ID)( )(OK/NG)(Data1)(Data2)(Data3)(x)

88. LCIN008 Control (Command: s n, b8)

It controls the LCIN008 device.

Transmission
(s)(n)( )(Set ID)( )(b)(8)( )(Data1)(Data2)(Cr)

Data 1 00: LCIN008 Power
01: LCIN008 Brightness
Data 2
1. For Power
0 x 00: Off
0 x 01: On
2. For Brightness
0 x ff: Read
0 x 00 ~ 0 x 64: Applies a set value

Acknowledgment
(n)( )(Set ID)( )(OK/NG)(b)(8)(Data1)(Data2)(x)

* This feature may not be available for all models.
* Other commands do not work for a certain time after applying.

89. [Transfer Control] (Command: s n, cb)

It transfers the command to RS232C out.

Transmission
(s)(n)( )(Set ID)( )(c)(b)( )(Data)(Cr)

Data Data that goes out to RS232C out

Acknowledgment
(n)( )(Set ID)( )(OK/NG)(c)(b)(Data)(x)

Data Response value of Data transferred to RS232C out

* This feature may not be available for all models.
* Other commands do not work for a certain time after applying.

90. Multichannel (Command: s n, 76)

It changes the channel.

Transmission
(s)(n)( )(Set ID)( )(7)(6)( )(Data)(Cr)

Data 01 - 09: Channel to switch to

Acknowledgment
(n)( )(Set ID)( )(OK/NG)(7)(6)(Data)(x)

* This feature may not be available for all models.

91. Change SetID (Command: j x)

Changes and checks Setid.

1. When it is a general LED model

Transmission
(j)(x)( )(Set ID)( )(Data1)( )(Data2)(Cr)

Data1 Data2: 00 01 ~ 03 e8 (1~1000)

Acknowledgment
(x)( )(Set ID)( )(OK/NG)(Data1)(Data2)(x)

2. When it is another model (read only)

Transmission
(j)(x)( )(Set ID)( )(Data)(Cr)

Data FF: Check the value of Setid
The returned value is indicated as a value of hexadecimal numbers corresponding to the ASCII code value.
(Return when Setid is 1: x 01 OK31x
Return when Setid is 1000: x 3e8 OK31303030x)

Acknowledgment
(x)( )(Set ID)( )(OK/NG)(Data)(x)

* It works even if the Setid does not match.
* This feature may not be available for all models.

92. [Gamma] (Command: s n, ad)

Sets Gamma Mode.

Transmission
(s)(n)( )(Set ID)( )(a)(d)( )(Data)(Cr)

Data 00: [low](1.9)
01: [medium](2.2)
02: [High1](2.4)
03: [High2](BT.1886)

Acknowledgment
(n)( )(Set ID)( )(OK/NG)(a)(d)(Data)(x)

* This feature may not be available for all models.

93. [Black Level] (Command: s n, ae)

It sets the Black Level mode.

Transmission
(s)(n)( )(Set ID)( )(a)(e)( )(Data)(Cr)

Data 00: Low
01: High
02: Auto

Acknowledgment
(n)( )(Set ID)( )(OK/NG)(a)(e)(Data)(x)

* This feature may not be available for all models.

94. [Ultra HD Deep Color] (Command: s n, af)

It sets the Ultra HD Deep Color mode for each input.

Transmission
(s)(n)( )(Set ID)( )(a)(f)( )(Data1)( )(Data2)(Cr)

Data1 70: DVI-D
90: HDMI1
91: HDMI2
92: OPS/HDMI3/DVI-D
93: HDMI4
95: OPS/DVI-D
96: HDMI3/DVI-D
97: HDMI3/HDMI2/DVI-D
98: OPS
99: HDMI2/OPS
C0: DISPLAYPORT
C1: DISPLAYPORT/USB-C
C2: HDMI3
C3: HDBaseT
FA: SDI/ST2110

Data2 00: [Off]
01: [4K]
02: [8K]

Acknowledgment
(n)( )(Set ID)( )(OK/NG)(a)(f)(Data1)(Data2)(x)

* This feature may not be available for all models.

95. [Sync Mode] (Command: s n, b0)

Sets Sync Mode.

Transmission
(s)(n)( )(Set ID)( )(b)(0)( )(Data)(Cr)

Data 00: [Slave] Mode
01: [Master] Mode

Acknowledgment
(n)( )(Set ID)( )(OK/NG)(b)(0)(Data)(x)

* This feature may not be available for all models.

96. [Select Content Type] (Command: s n, b1)

It sets labels by input.

Transmission

(s)(n)( )(Set ID)( )(b)(1)( )(Data1)( )(Data2)(Cr)

Data1 90: HDMI1
91: HDMI2
92: OPS/HDMI3/DVI-D
93: HDMI4
95: OPS/DVI-D
96: HDMI3/DVI-D
97: HDMI3/HDMI2/DVI-D
98: OPS
99: HDMI2/OPS
C0: DISPLAYPORT
C1: DISPLAYPORT/USB-C
C2: HDMI3
C3: HDBaseT

Data2 00: Video
01: Normal

Acknowledgment

(n)( )(Set ID)( )(OK/NG)(b)(1)(Data1)(Data2)(x)

* This feature may not be available for all models.

97. [PC/OPS Power Control] (Command: s n, 8b)

It sets the OPS/PC Power Control mode.

Transmission

(s)(n)( )(Set ID)( )(8)(b)( )(Data)(Cr)

Data 00: [Disable]
01: [Sync(On)]
02: [Sync(On/Off)]

Acknowledgment

(n)( )(Set ID)( )(OK/NG)(8)(b)(Data)(x)

* This feature may not be available for all models.

98. [LED Local Dimming] (Command: s n, c1)

It sets [LED Local Dimming].

(A feature to set the LED Local Dimming in a sub-item under [Settings] → [Display] → [Advanced Setting])

Transmission

(s)(n)( )(Set ID)( )(c)(1)( )(Data)(Cr)

Data 00: [Off]
01: [On]

Acknowledgment

(n)( )(Set ID)( )(OK/NG)(c)(1)(Data)(x)

* This feature may not be available for all models.

99. [Scan Inversion] (Command: s n, 87)

It controls the on/off status of Scan Inversion.

Transmission

(s)(n)( )(Set ID)( )(8)(7)( )(Data)(Cr)

Data 00: Off
01: On

Acknowledgment

(n)( )(Set ID)( )(OK/NG)(8)(7)(Data)(x)

* This feature may not be available for all models.
* If you change the values on a Video Wall model, please reboot for it to work normally.

100. [Frame Control] (Command: s n, b7)

It controls the Frame Control.

Transmission

(s)(n)( )(Set ID)( )(b)(7)( )(Data)(Cr)

Data 00: Off
01: On

Acknowledgment

(n)( )(Set ID)( )(OK/NG)(b)(7)(Data)(x)

* This feature may not be available for all models.
* If you change the values on a Video Wall model, please reboot for it to work normally.

101. [Average Picture Level Auto Control] (Command: s n, be)

Sets Average Picture Level Auto Control.

Transmission

(s)(n)( )(Set ID)( )(b)(e)( )(Data)(Cr)

Data 00: [Off]
01: [On]

Acknowledgment

(n)( )(Set ID)( )(OK/NG)(b)(e)(Data)(x)

* This feature may not be available for all models.

102. Read Brightness Value (Command: m u)

Checks the brightness value.

Transmission

(m)(u)( )(Set ID)( )(FF)(Cr)

Acknowledgment

(u)( )(Set ID)( )(OK/NG)(Data1)(Data2)(Data3)(Data4)(Data5)(Data6)(Data7)(x)

Data 1 00~64: Backlight PWM figure 0-100

Data 2 00~ff: The upper 1-byte of the value measured by the CA210.

Data 3 00~ff: The lower 1-byte of the value measured by the CA210.

The CA210 measurement is Hex: 0000~ffff, Decimal: 0 - 65535

Data 4 00~ff: The upper 1-byte of the value measured by BLU 1 Sensor.

Data 5 00~ff: The lower 1-byte of the value measured by BLU 1 Sensor

Data 6 00~ff: The upper 1-byte of the value measured by BLU 2 Sensor

Data 7 00~ff: The lower 1-byte of the value measured by BLU 2 Sensor

The BLU measurement is Hex: 0000~ffff, Decimal: 0 - 65535

* The CA210 measurement is entered as "Calibration" when the product is released from the factory. It is Default 0 before the calibration.
* This feature may not be available for all models.

103. [Screen Fault Detection] (Command: t z)

Sets the Screen Fault Detection feature.

Transmission

(t)(z)( )(Set ID)( )(Data)(Cr)

Data 00: [Off]
01: [On]

Acknowledgment

(z)( )(Set ID)( )(OK/NG)(Data)(x)

* This feature may not be available for all models.

104. [Stereo Mode] (Command: s n, c2)

Controls Stereo Mode.

Transmission

(s)(n)( )(Set ID)( )(c)(2)( )(Data)(Cr)

Data 00: Left/Right
01: Left/Left
02: Right/Right

Acknowledgment

(n)( )(Set ID)( )(OK/NG)(c)(2)(Data)(x)

* This feature may not be available for all models.

105. [HDR Picture Mode] (Command: s n, c4)

Selects a HDR Picture Mode.

Transmission

(s)(n)( )(Set ID)( )(c)(4)( )(Data)(Cr)

Data 00: Mall/QSR
01: General
02: Gov./Corp.
04: Education

Acknowledgment

(n)( )(Set ID)( )(OK/NG)(c)(4)(Data)(x)

* Depending on the model, some picture modes may not be supported.
* It works only when the HDR content is running.

106. [Dynamic Tone Mapping] (Command: s n, c5)

Selects Dynamic Tone Mapping.

Transmission

(s)(n)( )(Set ID)( )(c)(5)( )(Data)(Cr)

Data 00: [Off]
01: [On]

Acknowledgment

(n)( )(Set ID)( )(OK/NG)(c)(5)(Data)(x)

* Depending on the model, some picture modes may not be supported.
* It works only when the HDR content is running.

107. [LED Local Dimming] (Command: s n, c6)

Sets the LED Local Dimming.
(A feature to set the LED Local Dimming in a sub-item under [Settings] → [Display] → [Picture User Settings] → [Brightness Settings])

Transmission
(s)(n)( )(Set ID)( )(c)(6)( )(Data)(Cr)

Data 00: [Off]
01: [low]
02: [Medium]
03: [High]

Acknowledgment
(n)( )(Set ID)( )(OK/NG)(c)(6)(Data)(x)

* This feature may not be available for all models.

108. [USB2 to HDBaseT] (Command: s n, c3)

Sets USB2 to HDBaseT.

Transmission
(s)(n)( )(Set ID)( )(c)(3)( )(Data)(Cr)

Data 00: [Off]
01: [On]

Acknowledgment
(n)( )(Set ID)( )(OK/NG)(c)(3)(Data)(x)

* This feature may not be available for all models.

109. [Change Password] (Command: s n, a7)

Changes password.

Transmission
(s)(n)( )(Set ID)( )(a)(7)( )(Data1)(Data2)(Data3)(Data4)(Data5)(Data6)( )(Data7)(Data8)(Data9)(Data10)(Data11)(Data12)(Cr)

Data 1~6: 0~9 (Previously set password)
Data 7~12: 0~9 (New password)

Acknowledgment
(n)( )(Set ID)( )(OK/NG)(a)(7)( )(Data1)(Data2)(Data3)(Data4)(Data5)(Data6)( )(Data7)(Data8)(Data9)(Data10)(Data11)(Data12)(x)

* This feature may not be available for all models.

110. [Brightness Range Adjustment] (Command: s n, ab)

Adjust the brightness range.

Transmission
(s)(n)( )(Set ID)( )(a)(b)( )(Data1)( )(Data2)(Cr)

Data 1 00: Minimum brightness control
01: Maximum brightness control
Data 1 00~64: Range control

Acknowledgment
(n)( )(Set ID)( )(OK/NG)(a)(b)(Data1)(Data2)(x)

* This feature may not be available for all models.
* Data2 only supports Hex values that are multiples of 5.
* The range of minimum brightness value cannot exceed the range of maximum brightness, and the range of maximum brightness value cannot be less than the range of minimum brightness.

111. [Color Calibration] (Command: s n, d6)

Selects Color Calibration.

Transmission
(s)(n)( )(Set ID)( )(d)(6)( )(Data)(Cr)

Data 00: Off
01: On

Acknowledgment
(n)( )(Set ID)( )(OK/NG)(d)(6)(Data)(x)

* It may not be supported depending on the model.

112. Automatic adjustment (Command: j u)

Automatically adjusts image location and shake. (Only be executed in RGB-PC input mode.)

Transmission
(j)(u)( )(Set ID)( )(Data)(Cr)

Data 01: On

Acknowledgment
(u)( )(Set ID)( )(OK/NG)(Data)(x)

* It may not be supported depending on the model.

113. Horizontal location (Command: f q)

Adjust the screen horizontal location. (Only be executed in RGB-PC input mode.)

* However, the operating range varies depending on the RGB input resolution.

Transmission
(f)(q)( )(Set ID)( )(Data)(Cr)

Data 00~64: Min -50 (Left) ~ Max 50 (Right)

Acknowledgment
(q)( )(Set ID)( )(OK/NG)(Data)(x)

* It may not be supported depending on the model.

114. Vertical location (Command: f r)

Adjust the screen vertical location. (Only be executed in RGB-PC input mode.)

* However, the operating range varies depending on the RGB input resolution.

Transmission
(f)(r)( )(Set ID)( )(Data)(Cr)

Data 00~64: Min -50 (Down) ~ Max 50 (Up)

Acknowledgment
(r)( )(Set ID)( )(OK/NG)(Data)(x)

* It may not be supported depending on the model.

115. Horizontal Size (Command: f s)

Adjust the screen horizontal Size. (Only be executed in RGB-PC input mode.)

* However, the operating range varies depending on the RGB input resolution.

Transmission
(f)(s)( )(Set ID)( )(Data)(Cr)

Data 00~64: Min -50 (Reduce) ~ Max 50 (Enlarge)

Acknowledgment
(s)( )(Set ID)( )(OK/NG)(Data)(x)

* It may not be supported depending on the model.

116. Intelligent Auto (Command: t i)

Select Intelligent Auto settings.

Transmission
(t)(i)( )(Set ID)( )(Data)(Cr)

Data 00: Off
01: On

Acknowledgment
(i)( )(Set ID)( )(OK/NG)(Data)(x)

* It may not be supported depending on the model.

117. [Genlock] (Command: s n, dc)

Sets Gen Lock On/Off.

Transmission
(s)(n)( )(Set ID)( )(d)(c)( )(Data)(Cr)

Data 00: Gen Lock On
01: Gen Lock Off

Acknowledgment
(n)( )(Set ID)( )(OK/NG)(d)(c)(Data)(x)

* It may not be supported depending on the model.

TROUBLESHOOTING

No image is displayed.

- Is the power cord connected to the product?
  - Check if the power cord is correctly plugged into the power outlet.
- Is the 'No Signal' message displayed?
  - Check the connection status of the HDMI or DP cable.
  - Access the Input menu to check the input source.

The 'Unknown Product' message appears when the product is connected.

- Did you install the driver?
  - Check if the Plug and Play function is supported by referring to the graphics card user manual.

The screen image looks abnormal.

- Is the screen position wrong?
  - Check if the graphics card resolution and frequency are supported by the product. If the frequency is out of range, set to the recommended resolution in the "Display" settings in Control Panel.
- The screen is displayed abnormally.
  - The proper input source is not connected to the port. Connect a cable that matches the input source signal.

The display colour is abnormal.

- After-image appears when the product is turned off.
  - If you display a still image on the screen for a long time, the LED package may be damaged rapidly. Use the screen-saver function.
  - When a dark image is displayed on the screen after an image with high contrast (black and white or grey), this may cause image sticking. This is normal for LED products.
- Screen has poor colour resolution (16 colours).
  - Set the colour depth to more than 24 bits (true colour).
- Screen colour is unstable or mono-coloured.
  - Check the connection status of the signal cable. Or, re-insert the PC graphics card.
- Does a black dot appear on the screen?
  - The few pixels (red, green, blue, white and black) that appear on the screen are due to the inherent characteristics of the LED surface. This is not a malfunction of the Screen.

The operation does not work normally.

- The power suddenly turned off.
  - Check if the auto-off function is activated on the settings related time.
  - Power source has not being supplied properly. See if the product power cord is connected properly.

NOTE

- Without prior notice, the software is subject to change to improve the functionality of the product.

PRODUCT SPECIFICATIONS

Without prior notice, the product specifications are subject to change to enhance the functionality of the product.

The ~ symbol means alternating current, and the symbol ⎓ means direct current.

Pixel pitch (distance between pixels)	0.78125 mm
Resolution	3840 x 2160
Pixel density	1,638,400 pixels/m^2
Number of pixels per screen	331,776 pixels
Number of colour output bits	Internal 20 bit
Number of expressible colours	281.4 x 10^{12}
Input/ Output ports	HDMI™ IN 1, HDMI™ (ARC) IN 2, HDMI™ IN 3, DP IN , USB 3.0 IN, RS-232C IN, RS-232C OUT, IR&LIGHT SENSOR, OPTICAL DIGITAL AUDIO OUT, LAN IN
Dimensions (Width x Height x Depth) / Weight	3005 mm x 1692.5 mm x 69.4 mm / 151.5 kg
Luminance	Typ. 500 nit
Colour temperature (K)	3,200 - 9,300 K
Rating	100-240 V~ 50/60 Hz, 8 A x 2
Operating Temperature	0 °C to 40 °C
Operating Humidity	10 % to 80 %
Storage Temperature	-20 °C to 60 °C
Storage Humidity	5 % to 85 %
Manufactured in	Republic of Korea

Wireless module(LGSBWAX12)Specifications	
Wireless LAN (IEEE 802.11a/b/g/n/ac/ax)	
Frequency range (MHz)	Output power (Max.) (dBm)
2400 to 2483.5 5150 to 5725 5725 to 5850	17 15 13
Frequency range (MHz) (Depending on country)	Output power (Max.) (dBm) (Depending on country)
5945 to 6425	11
Bluetooth	
Frequency range (MHz)	Output power (Max.) (dBm)
2400 to 2483.5	9

- As band channels can vary per country, the user cannot change or adjust the operating frequency. This product is configured for the regional frequency table.
- For consideration of the user, this device should be installed and operated with a minimum distance of 20 cm between the device and the body.

(Only Nigeria)

Connection and use of this communications equipment is permitted by the Nigerian Communications Commission

(Only Philippines)

Wireless module (LGSBWAX12) Specifications	
Wireless LAN (IEEE 802.11a/b/g/n/ac/ax)	
Frequency range (MHz)	**Output power (Max.) (dBm)**
2400 to 2483.5 5150 to 5725 5725 to 5850	17 15 15
Bluetooth	
Frequency range (MHz)	**Output power (Max.) (dBm)**
2400 to 2483.5	9

- As band channels can vary per country, the user cannot change or adjust the operating frequency. This product is configured for the regional frequency table.
- For consideration of the user, this device should be installed and operated with a minimum distance of 20 cm between the device and the body.
- FCC ID: BEJLGSBWAX12 / IC: 2703H-LGSBWAX12

HDMI 1,2,3 / DisplayPort Text Mode

Resolution	Horizontal Frequency (kHz)	Vertical Frequency (Hz)	Note
720 x 400	31.46	70.08	
640 x 480	31.46	59.94	
800 x 600	37.87	60.31	
1024 x 768	48.36	60	
1360 x 768	47.71	60.01	
1152 x 864	54.34	60.05	
1280 x 1024	63.98	60.02	Supported in HDMI-PC mode
1920 x 1080	67.5	60	
1920 x 1080	134.86	119.88	
1920 x 1080	135	120	
3840 x 2160	53.94	23.97	
3840 x 2160	54	24	
3840 x 2160	56.25	25	
3840 x 2160	67.43	29.97	
3840 x 2160	67.5	30	
3840 x 2160	112.5	50	
3840 x 2160	134.86	59.94	

Resolution	Horizontal Frequency (kHz)	Vertical Frequency (Hz)	Note
3840 x 2160	135	60	Supported when Deep Color is set to 4 K
3840 x 2160	225	100	
3840 x 2160	269.73	119.88	
3840 x 2160	270	120	

HDMI 1,2,3 / DisplayPort Video Mode

Resolution	Horizontal Frequency (kHz)	Vertical Frequency (Hz)	Note
640 x 480	31.46	59.94	
640 x 480	31.5	60	
720 x 480	31.46	59.94	
720 x 480	31.5	60	
720 x 576	31.25	50	
1280 x 720	44.95	59.94	
1280 x 720	45	60	
1280 x 720	37.5	50	
1920 x 1080	28.12	50	
1920 x 1080	33.71	59.94	
1920 x 1080	33.75	60	
1920 x 1080	26.97	23.97	
1920 x 1080	27	24	
1920 x 1080	28.12	25	
1920 x 1080	33.71	29.97	
1920 x 1080	33.75	30	
1920 x 1080	56.25	50	
1920 x 1080	67.43	59.94	

Resolution	Horizontal Frequency (kHz)	Vertical Frequency (Hz)	Note
1920 x 1080	67.5	60	
1920 x 1080	112.5	100	
1920 x 1080	134.86	119.88	
1920 x 1080	135	120	
3840 x 2160	53.94	23.97	
3840 x 2160	54	24	
3840 x 2160	56.25	25	
3840 x 2160	67.43	29.97	
3840 x 2160	67.5	30	
3840 x 2160	112.5	50	
3840 x 2160	134.86	59.94	
3840 x 2160	135	60	Supported when Deep Color is set to 4 K
3840 x 2160	225	100	
3840 x 2160	269.73	119.88	
3840 x 2160	270	120	

NOTE

- When the cable is connected to the HDMI or the DisplayPort, you can select the PC/DTV mode optionally. It is recommended that you select PC mode when connecting to a PC and select DTV mode when connecting to other devices. The DTV mode refers to all modes excluding the PC mode.
- Vertical frequency: The product display functions by the screen image changing dozens of times every second like a fluorescent lamp. The vertical frequency or refresh rate is the number of image displays per second. The unit is Hz.
- Horizontal frequency: The horizontal interval is the time taken to display one horizontal line. When 1 is divided by the horizontal interval, the number of horizontal lines displayed every second can be tabulated as the horizontal frequency. The unit is kHz.

(Unit: mm)

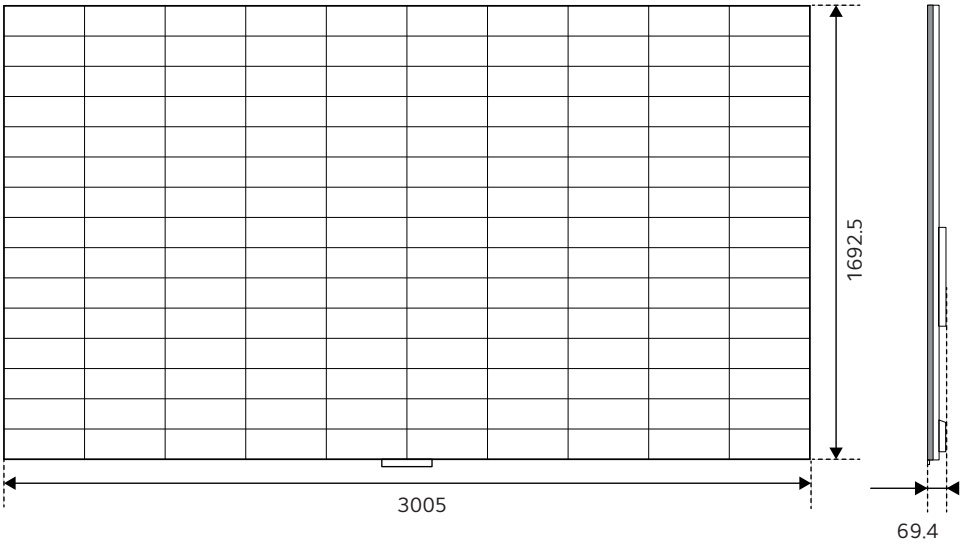

LICENSES

Supported licenses may differ by model. For more information of the licenses, visit *www.lg.com*.



The terms HDMI, HDMI High-Definition Multimedia Interface, HDMI trade dress and the HDMI Logos are trademarks or registered trademarks of HDMI Licensing Administrator, Inc.

Manufactured under license from Dolby Laboratories. Dolby, Dolby Vision, Dolby Vision IQ, Dolby Audio, Dolby Atmos, and the double-D symbol are trademarks of Dolby Laboratories Licensing Corporation.



The Bluetooth® word mark and logos are registered trademarks owned by Bluetooth SIG, Inc. and any use of such marks by LG Electronics Inc. is under license. Other trademarks and trade names are those of their respective owners.



The model and serial number of the product are located on the back and on one side of the product.

Record them below in case you ever need service.

MODEL

SERIAL NO.

Temporary noise is normal when powering ON or OFF this device.