LG

MFL72139803241 2REV00

OLED55G5*
OLED65G5* OLED83G5*
OLED77G5* OLED97G5*

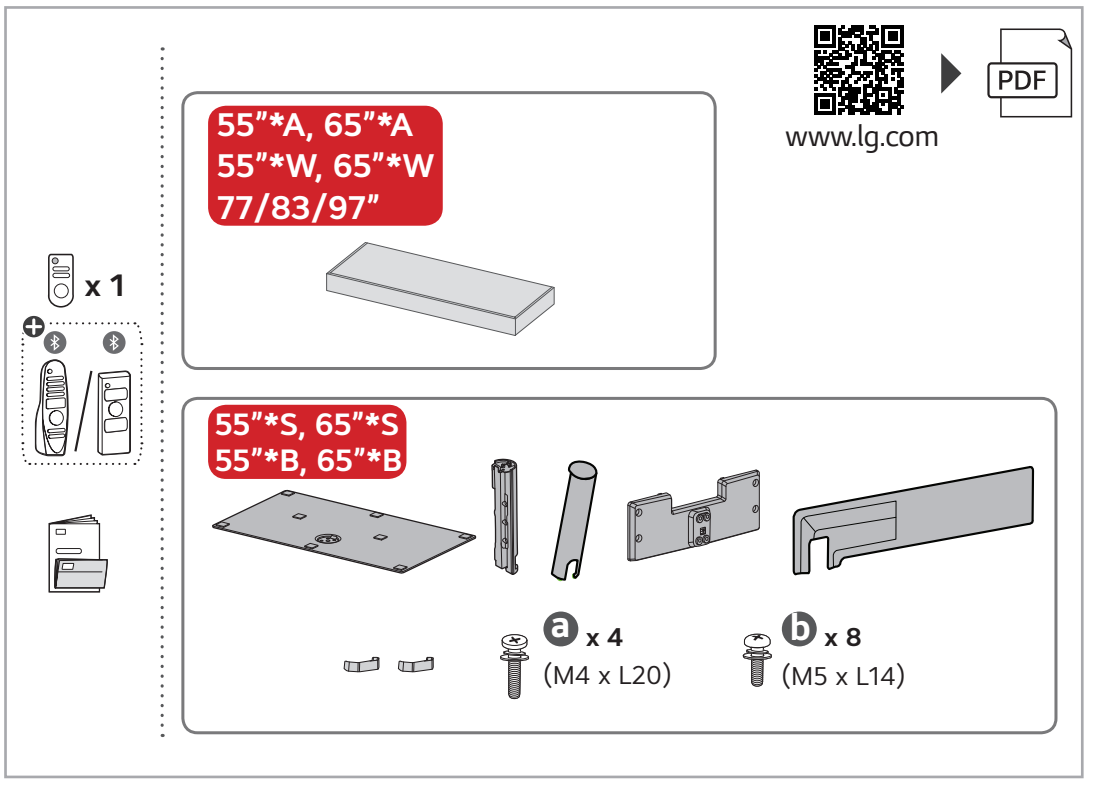

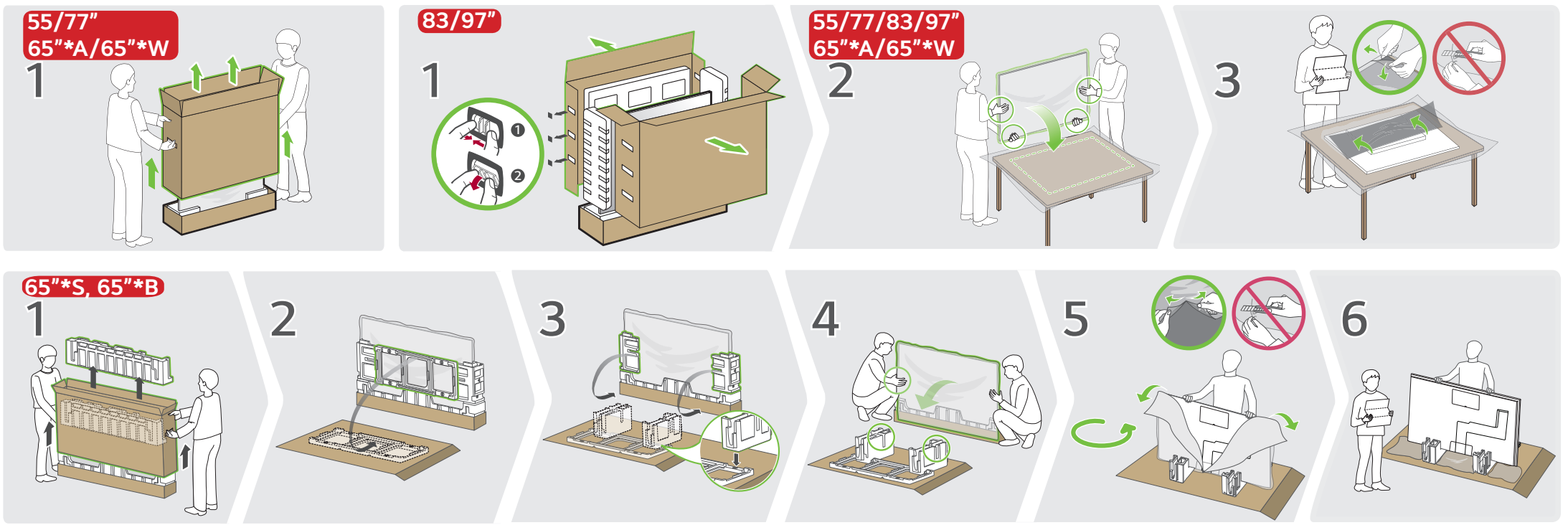

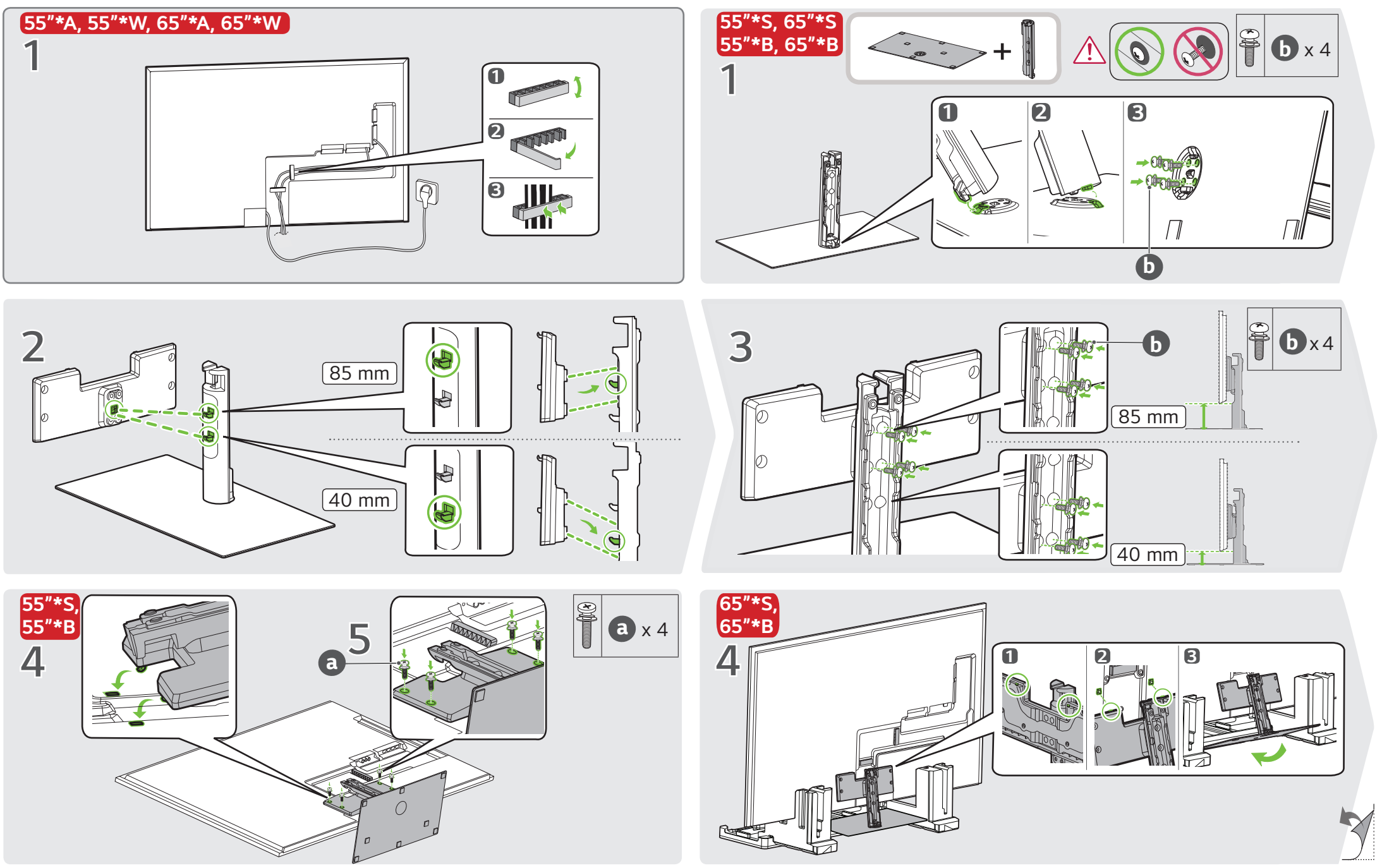

65”*S, 65”*B

5

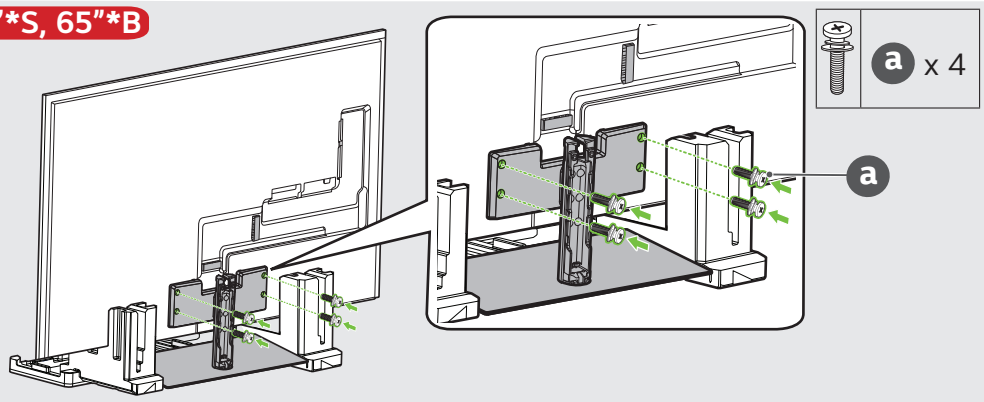

55”*S, 55”*B, 65”*S, 65”*B

6

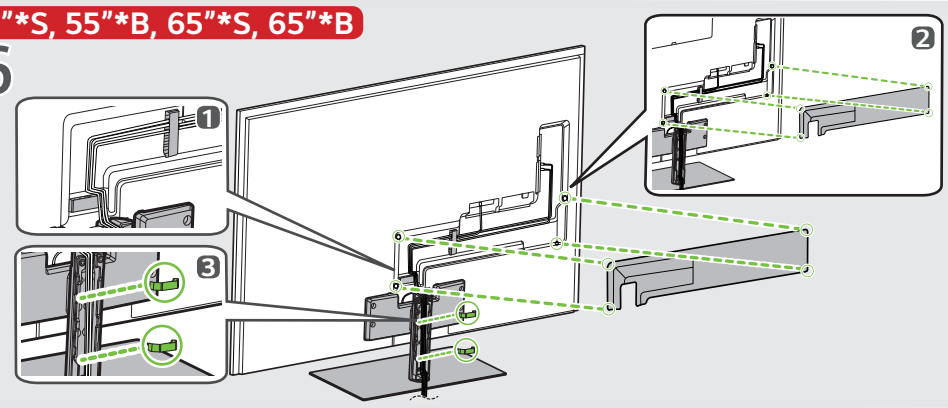

55”*S, 55”*B, 65”*S, 65”*B

7

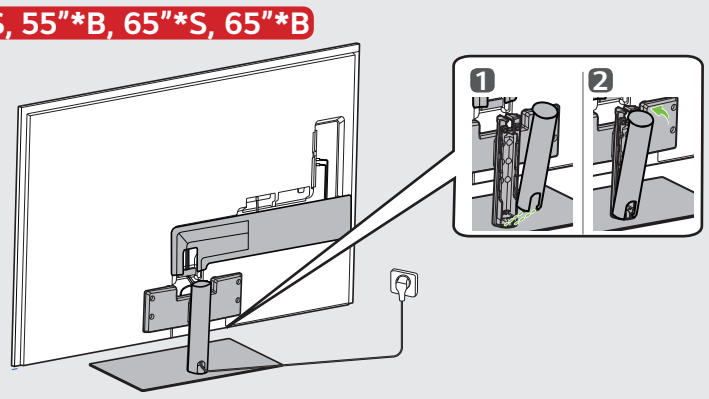

77/83/97”

1

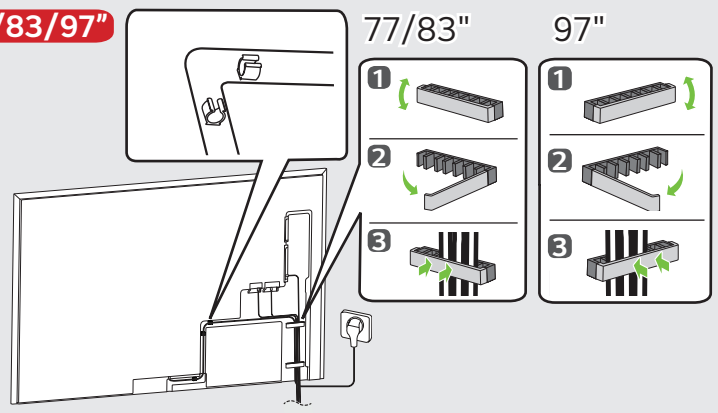

55/65/77/83/97”

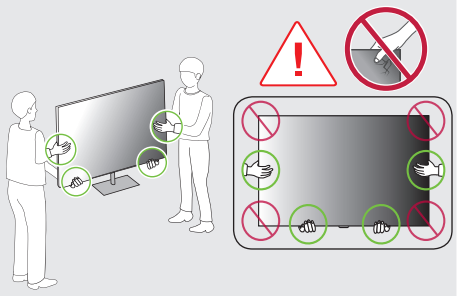

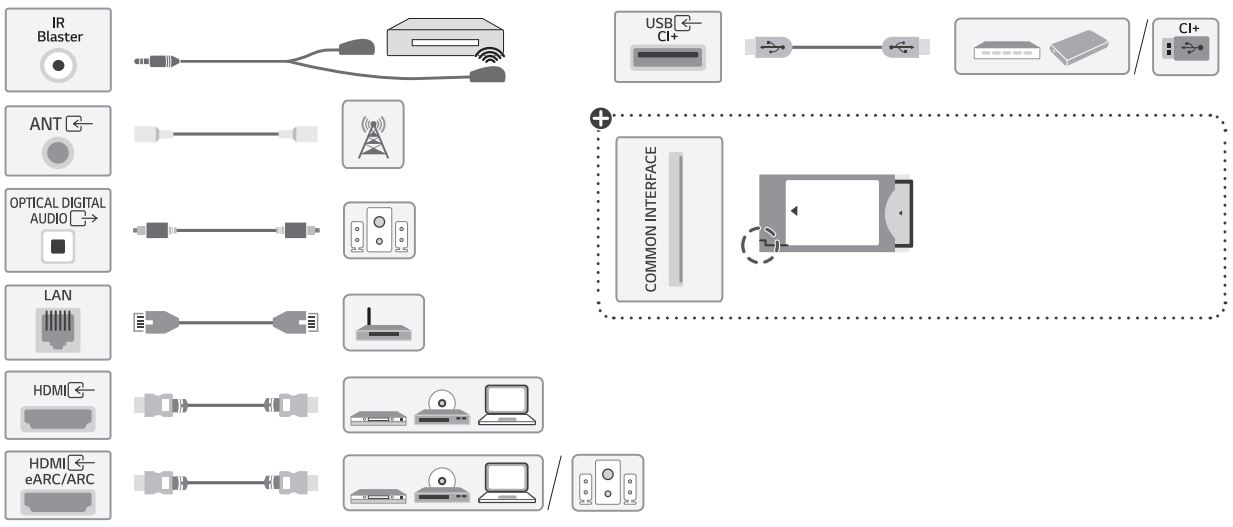

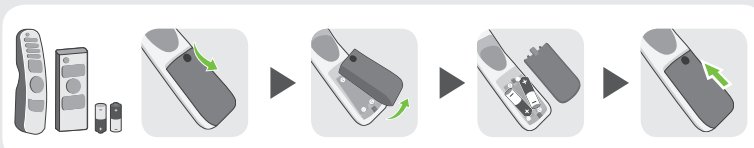

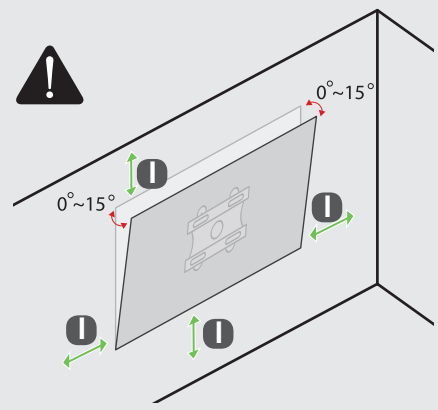

I (mm)	
OLED55G5*	100
OLED65G5*	
OLED77G5*	
OLED83G5*	
OLED97G5*	300

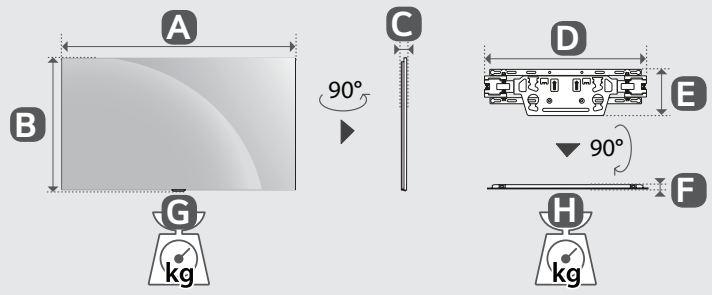

	A	B	C	D	E	F	G	H
	(mm)						(kg)	
OLED55G5*A OLED55G5*W	1222	703	27.2	452	129	13	16.8	1.2
OLED65G5*A OLED65G5*W	1441	826	24.3	452	129	13	22	1.2
OLED77G5*	1712	982	24.8	452	129	13	33.6	1.2
OLED83G5*	1847	1057	28	452	129	13	39.0	1.2

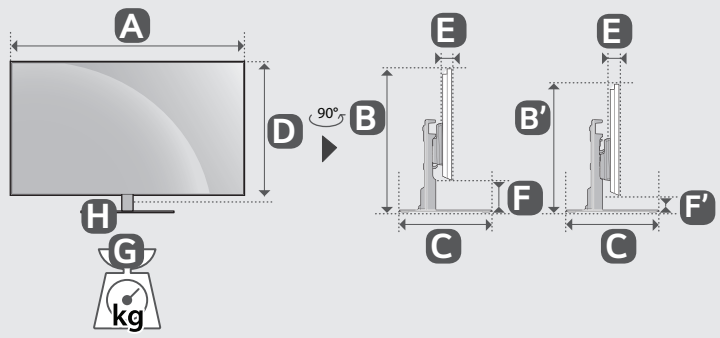

	A	B / B'	C	D	E	F / F'	G	G - H
	(mm)						(kg)	
OLED55G5*B OLED55G5*S	1222	787 / 742	263	703	27.2	85 / 40	22.1	16.8
OLED65G5*B OLED65G5*S	1441	910 / 865	263	826	24.3	85 / 40	27.3	22

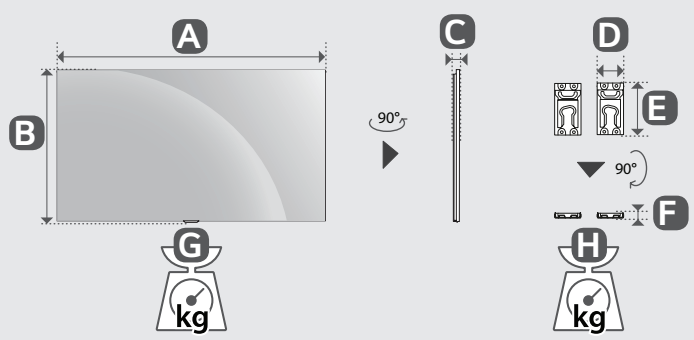

	A	B	C	D	E	F	G	H
	(mm)						(kg)	
OLED97G5*	2155	1230	28.2	134.8	254	16	57	2.8

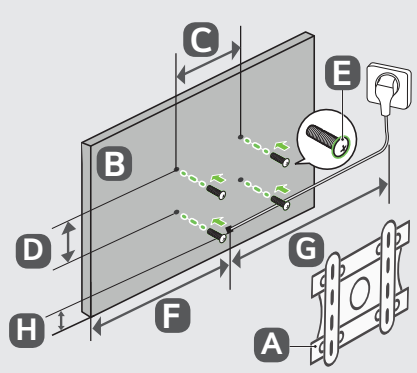

A	B	C x D (mm)	E	F (mm)	G (m)	H (mm)
OLW480B	OLED55G5*	300 x 200	M6	544	≧1.5	56
WB24GCB	OLED65G5*	300 x 300		654		56
	OLED77G5*			856		57
WB24GCB	OLED83G5*	400 x 400		924		59
WB24GDB	OLED97G5*	600 x 400	M8	943		142

* : 0~9, A~Z