INSTALLATION MANUAL

AIR-TO-WATER HEAT PUMP



Please read this installation manual completely before installing the product.

Original instruction

EN	**ENGLISH**	**IT**	**ITALIANO**	**ES**	**ESPAÑOL**	**FR**	**FRANÇAIS**
DE	**DEUTSCH**	**EL**	**ΕΛΛΗΝΙΚΑ**	**CZ**	**ČEŠTINA**	**NL**	**NEDERLANDS**
PL	**POLSKI**	**RO**	**ROMÂNĂ**	**PT**	**PORTUGUÊS**	**HU**	**MAGYAR**
BG	**БЪЛГАРСКИ**	**SR**	**SRPSKI**	**HR**	**HRVATSKI**	**SL**	**SLOVENŠČINA**
DA	**DANSK**	**SV**	**SVENSKA**				

Outdoor Unit	Indoor Unit
HM121 / 141 / 161HF UB60 HM123 / 143 / 163HF UB60 HM093HFX UB60 HM071 / 091HF UB40 HM073 / 093HF UB40 HM121 / 141 / 161HFD# UB41 HM123 / 143 / 163HFD# UB41 HM051 / 071 / 091HFD# UA41 HM073 / 093HFD# UA41	PHCS1 EEWXLEU

MFL05837004
Rev.02_081226

www.lg.com

Copyright © 2026 LG Electronics Inc. All Rights Reserved.

TABLE OF CONTENTS

SAFETY INSTRUCTIONS 5
READ ALL INSTRUCTIONS BEFORE USE 5
Safety Messages 5
Notes for Flammable Refrigerant 6
DELIVERED PARTS 22
GENERAL INFORMATION 24
Model information 24
Parts and Dimensions 25
Control Parts 30
Control Panel 31
Typical Installation Example 32
Cycle Diagram 33
Wiring Diagram 36
INSTALLATION OF OUTDOOR UNIT 40
Conditions to be considered when installing the outdoor unit 40
Minimum Operation Space 41
Safety Zone 42
Installation at Seaside 44
Seasonal wind and cautions in winter 45
Transporting the Unit 46
Foundation for Installation 48
INSTALLATION OF INDOOR UNIT 50
Conditions where Indoor Unit is Installed 50
ELECTRICAL WIRING 53
General considerations and warnings 53
WATER PIPING 64
Water Piping and Water Circuit Connection 64
How to install downward water piping 66
Water pump Capacity 69
Pressure Drop 69
Performance curve 70
Water Quality 72
Frost protection by antifreeze 72
Frost protection by antifreeze valve 73
Water Volume and Expansion Vessel Pressure 75
ACCESSORIES INSTALLATION 76
Before Installation 79
Thermostat 79
2nd Circuit 82

3rd Party Backup heater 85
3rd Party Boiler 88
3rd Party Controller 89
Meter Interface 90
DHW Tank 91
DHW Tank Kit 94
Solar Thermal Kit 96
Buffer Tank temperature sensor 98
Dry Contact 99
External Controller - Setting up programmable digital input operation 102
Remote Temperature Sensor 103
Solar pump 105
External pump 106
Wi-Fi Modem 107
Energy State 108
Digital Input for energy saving (ESS, Smart Grid) 109
2Way Valve 111
3Way Valve(Water Tank) 112
Wall-mounted air sensor 113
Final check 114

CONFIGURATION 115
DIP Switch Setting 115

DESCRIPTION OF THE OPERATION 122
Installation Wizard 122
Main screen 124
Menu screen 124
Setting screen 125

SERVICE SETTING 126
How to enter service setting 126
Service setting 127
Service contact 128

INSTALLER SETTING 129
How to enter installer setting 129
Installer setting 130
Installer settings in detail 158
Auto mode - Seasonal auto temp. 173
Domestic hot water - DHW temperature settings 174
Domestic hot water - Thermal disinfection 175
Domestic hot water - DHW heating duration 176
Domestic hot water - DHW electric re-heating 176

Domestic hot water - DHW re-circulation....177
Solar thermal system - Solar collector operating range....178
Solar thermal system - Solar tank temp. limit....178
Solar thermal system - Solar thermal dT....178
Service - Pump test run....179
Service - Actuator test - Test mode....179
Service - Actuator test - Pump test....179
Service - Actuator test - Valve test....179
Service - Frost protection temperature....180
Connectivity - Modbus address(HEX)....181
Connectivity - CN_EXT....185
Connectivity - 3rd party boiler....186
Connectivity - Energy state....188

COMMISSIONING....189
Check List before Starting Operation....189
Starting Operation....191
Starting Operation flow chart....191
Trouble shooting....192

ANNEX....201

SAFETY INSTRUCTIONS

READ ALL INSTRUCTIONS BEFORE USE

The following safety guidelines are intended to prevent unforeseen risks or damage from unsafe or incorrect operation of the appliance.

Safety Messages

⚠ This symbol is displayed to indicate matters and operations that can cause risk.
Read the part with this symbol carefully and follow the instructions in order to avoid risk.

⚠ WARNING

This indicates that the failure to follow the instructions can cause serious injury or death.

⚠ CAUTION

This indicates that the failure to follow the instructions can cause the minor injury or damage to the product.

Notes for Flammable Refrigerant

The following symbols are displayed on units.



This symbol indicates that this appliance uses a flammable refrigerant. If the refrigerant is leaked and exposed to an external ignition source, there is a risk of fire.



This symbol indicates that the Installation Manual should be read carefully.



This symbol indicates that service personnel should be handling this equipment with reference to the Installation Manual.



This symbol indicates that information is available in the Owner's Manual or Installation Manual.

⚠ WARNING

Installation

- Do not use a defective or underrated circuit breaker. Use this appliance on a dedicated circuit.
  - There is risk of fire or electric shock.
- For electrical work, contact the dealer, seller, a qualified electrician, or an Authorized Service Center.
  - There is risk of fire or electric shock.
- Always ground the unit.
  - There is risk of fire or electric shock.
- Install the panel and the cover of control box securely.
  - There is risk of fire or electric shock.
- Always install a dedicated circuit and breaker.
  - Improper wiring or installation may cause fire or electric shock.

- Use the correctly rated breaker or fuse.
  - There is risk of fire or electric shock.
- Do not modify or extend the power cable.
  - There is risk of fire or electric shock.
- Do not install, remove, change, inspection and maintenance, repair or reinstall the unit by yourself (customer).
  - There is risk of fire, electric shock, explosion, or injury
- Do not change or remove the safety devices.
  - There is risk of death, injury
- If antifreeze agent is needed, it should be handled by professional only. Anti-freeze can be regarded as toxic (Acute Tox.4, H302).
  - There is a risk of injury.
- For installation, always contact the dealer or an authorized Service Center.
  - There is risk of fire, electric shock, explosion, or injury.
- Do not install the unit on a defective installation stand.
  - It may cause injury, accident, or damage to the unit.
- Be sure the installation area does not deteriorate with age.
  - If the base collapses, the unit could fall with it, causing property damage, unit failure, and personal injury.
- Do not install the water pipe system as Open loop type.
  - It may cause failure of unit.
- Use a vacuum pump or inert (N_2/CO_2) gas when doing leakage test or purging air. Do not compress air or oxygen and do not use flammable gases.
  - There is the risk of death, injury, fire or explosion.
- Make sure the connected condition of connector in product after maintenance.
  - Otherwise, it may cause product damage.
- Do not touch leaked refrigerant directly.
  - There is risk of frostbite.

- Copper in contact with refrigerants shall be oxygen-free or deoxidized, for example Cu-DHP as specified in EN 12735-1 and EN 12735-2.
- Compliance with national gas regulations shall be observed.
- Refrigerant tubing shall be protected or enclosed to avoid damage.
- The installation of pipe-work shall be kept to a minimum.
- A brazed, welded, or mechanical connection shall be made before opening the valves to permit refrigerant to flow between the refrigerating system parts. A vacuum valve shall be provided to evacuate the interconnecting pipe and/or any uncharged refrigerating system part.
- Any person who is involved with working on or breaking into a refrigerant circuit should hold a current valid certificate from an industry-accredited assessment authority, which authorises their competence to handle refrigerants safely in accordance with an industry recognised assessment specification. (Include the corresponding tools and required personal protective equipment)
- Any person who is involved with working on or breaking into a refrigerant circuit wear appropriate protective equipment and have a fire extinguisher available.
- Do not use means to accelerate the defrosting process or to clean, other than those recommended by the manufacturer.
- Do not pierce or burn.
- Be aware that refrigerants may not contain an odour.
- Dismantling the unit, treatment of the refrigerant oil and eventual parts should be done in accordance with local and national standards.
- Flexible refrigerant connectors (such as connecting lines between the indoor and outdoor unit) that may be displaced during normal operations shall be protected against mechanical damage.

- Make sure to install necessary safety devices.
- Do not let refrigerant enter the sewage system.
- Pipe-work shall be securely mounted and guarded from physical damage.
- Mechanical connections (mechanical connectors or flared joints) shall be accessible for maintenance purposes.
- Always check for gas (refrigerant) leakage before installation or repair of unit by using the leak detector (leak detector must be suitable for R290).
  - There is risk of explosion or fire and failure of unit.
- The appliance shall be stored so as to prevent mechanical damage from occurring.
- The appliance shall be stored in a room without continuously operating ignition sources (for example: open flames, an operating gas appliance or an operating electric heater.)
- The appliance shall be installed in accordance with national wiring regulations.
- Always inspect gas leakage after the installation and repair of product.
  - Otherwise, it may cause the failure of product.
- Electrical components shall only be replaced with parts specified by the appliance manufacturer.
- Replacement with other parts may result in the ignition of refrigerant in the event of a leak

Operation

- Take care to ensure that power cable could not be pulled out or damaged during operation.
  - There is risk of fire or electric shock.
- Do not place anything on the power cable.
  - There is risk of fire or electric shock.

- Do not plug or unplug the power supply plug during operation.
  - There is risk of fire or electric shock.
- Do not touch (operate) the unit with wet hands.
  - There is risk of fire or electric shock.
- Do not place a heater or other appliances near the power cable.
  - There is risk of fire or electric shock.
- Do not allow water to run into electric parts.
  - There is risk of fire, failure of the unit, or electric shock.
- Do not store or use or even allow flammable gas or combustibles near the outdoor unit. (especially in safety zone)
  - There is risk of fire or failure of unit
- Do not use the unit in a tightly closed space for a long time.
  - It may cause damage to the unit.
- When flammable gas leaks, turn off the gas and open a window for ventilation before turning the unit on.
  - There is risk of explosion or fire.
- If strange sounds, or smell or smoke comes from unit, turn the breaker off or disconnect the power supply cable.
  - There is risk of electric shock or fire.
- Stop operation and close the window in storm or hurricane. If possible, remove the unit from the window before the hurricane arrives.
  - There is risk of property damage, failure of unit, or electric shock.
- Do not open the front cover of the unit while operation. (Do not touch the electrostatic filter, if the unit is so equipped.)
  - There is risk of physical injury, electric shock, or unit failure.
- Do not touch any electric part with wet hands. you should be power off before touching electric part.
  - There is risk of electric shock or fire.

- Do not touch refrigerant pipe and water pipe or any internal parts while the unit is operating or immediately after operation.
  - There is risk of burns or frostbite, personal injury.
- If you touch the pipe or internal parts, you should be wear protection or wait time to return to normal temperature.
  - Otherwise , it may cause burns or frostbite, personal injury.
- Turn the main power on 6 hours before putting the product into operation, in order to liquefy the compressor oil.
  - Otherwise, it may cause compressor damage.
- Do not touch electric parts for 10 minutes after main power off.
  - There is risk of physical injury, electric shock.
- The backup heater integrated into hydrobox indoor unit may operate while product is turned off. It is intended to protect the product.
- Be careful that some part of the control box are hot.
  - There is risk of physical injury or burns.
- When the unit is soaked (flooded or submerged), contact an Authorized Service Center.
  - There is risk of fire or electric shock.
- Be cautious that water could not be poured to the unit directly.
  - There is risk of fire, electric shock, or unit damage.
- Ventilate the installation room of indoor unit from time to time.
  - There is risk of fire or electric shock.
- Turn the main power off when cleaning or maintaining the unit.
  - There is risk of electric shock.
- Take care to ensure that nobody could step on or fall onto the unit.
  - This could result in personal injury and unit damage.
- If the unit is not used for long time, we strongly recommend not to switch off the power supply to the unit.
  - There is risk of water freezing.

- If the unit is not used and switch off the power supply to the unit for long time, we strongly recommend to drain off all water in the unit by certificated person.
  - There is risk of water freezing.
- The appliance shall be stored in a well-ventilated area where the room size corresponds to the room area as specified for operation.

Safety Instructions for the Service

- Checks to the area

  Prior to beginning work on systems containing flammable refrigerants, safety checks are necessary to ensure that the risk of ignition is minimised. For repair to the refrigerating system, the following precautions shall be complied with prior to conducting work on the system.

- Work procedure

  Work shall be undertaken under a controlled procedure so as to minimise the risk of a flammable gas or vapour being present while the work is being performed.

- General work area

  All maintenance staff and others working in the local area shall be instructed on the nature of work being carried out. Work in confined spaces shall be avoided.

- Checking for presence of refrigerant

  The area shall be checked with an appropriate refrigerant detector prior to and during work, to ensure the technician is aware of potentially flammable atmospheres. Ensure that the leak detection equipment being used is suitable for use with flammable refrigerants, i.e. non-sparking, adequately sealed or intrinsically safe.

- Presence of fire extinguisher

  If any hot work is to be conducted on the refrigerating equipment or any associated parts, appropriate fire extinguishing equipment shall be available to hand. Have a dry powder or CO_2 fire extinguisher adjacent to the charging area.

- No ignition sources

  No person carrying out work in relation to a refrigerating system which involves exposing any pipe work shall use any sources of ignition in such a manner that it may lead to the risk of fire or explosion.

  All possible ignition sources, including cigarette smoking, should be kept sufficiently far away from the site of installation, repairing, removing and disposal, during which refrigerant can possibly be released to the surrounding space.

  Prior to work taking place, the area around the equipment is to be surveyed to make sure that there are no flammable hazards or ignition risks. “No Smoking” signs shall be displayed.

- Ventilated area

  Ensure that the area is in the open or that it is adequately ventilated before breaking into the system or conducting any hot work. A degree of ventilation shall continue during the period that the work is carried out. The ventilation should safely disperse any released refrigerant and preferably expel it externally into the atmosphere.

Safety when storing the product

- Follow all local regulations and requirements for product storage.
- Store Products in places not exposed to the risk of fire and away from sources of heat and ignition.
- Keep away from combustible materials.
- Store away from oxidizing gases and other oxidizing materials.
- The appliance shall be stored in a room without continuously operating open flames (for example an operating gas appliance) and ignition sources (for example an operating electric heater).
- Servicing shall only be performed as recommended by the equipment manufacturer. Maintenance and repair requiring the assistance of other skilled personnel shall be carried out under the supervision of the person competent in the use of flammable refrigerants.
- When mechanical connectors are reused, sealing parts shall be renewed. When flared joints are reused the flare part shall be re-fabricated.
- Periodic(more than once/year) cleaning of the dust or salt particles stuck on the heat exchangers by using water.
- Keep any required ventilation openings clear of obstruction.
- Ensure that the area is in the open or that it is adequately ventilated before breaking into the system or conducting any hot work. A degree of ventilation shall continue during the period that the work is carried out. The ventilation should safely disperse any released refrigerant and preferably expel it externally into the atmosphere.
- Cabling will not be subject to wear, corrosion, excessive pressure, vibration, sharp edges or any other adverse environmental effects. The check shall also take into account the effects of ageing or continual vibration from sources such as

compressors or fans.

- Under no circumstances shall potential sources of ignition be used in the searching for or detection of refrigerant leaks. A halide torch (or any other detector using a naked flame) shall not be used.

Leak detection methods

The following leak detection methods are deemed acceptable for systems containing flammable refrigerants.

Electronic leak detectors shall be used to detect flammable refrigerants, but the sensitivity may not be adequate, or may need re-calibration. (Detection equipment shall be calibrated in a refrigerant-free area.)

Ensure that the detector is not a potential source of ignition and is suitable for the refrigerant used.

A leak detector measures PPM of gas not the mixture with air.

This is done by a personal gas detector. This protects you at 10% and 20% of the LFL.

Leak detection fluids are also suitable for use with most refrigerants but the use of detergents containing chlorine shall be avoided as the chlorine may react with the refrigerant and corrode the copper pipe-work.

NOTE

Examples of leak detection fluids are

- bubble method
- fluorescent method agents

If a leak is suspected, all naked flames shall be removed / extinguished.

If a leakage of refrigerant is found which requires brazing, all of the refrigerant shall be removed from the system, or isolated (by means of shut off valves) in a part of the system remote from the leak.

Removal and evacuation

When breaking into the refrigerant circuit to make repairs – or for any other purpose – conventional procedures shall be used. However, for flammable refrigerants it is important that best practice is followed since flammability is a consideration.

The following procedure shall be adhered to:

– Safely remove refrigerant following local and national regulations;
– Evacuate;
– Purge the circuit with inert gas (optional for A2L);
– Evacuate (optional for A2L);
– Continuously flush with inert gas when using flame to open circuit;
– Open the circuit.

The refrigerant charge shall be recovered into the correct recovery cylinders.

The manufacturer shall specify the inert gases that can be used. Compressed air or oxygen shall not be used for purging refrigerant systems.

NOTE

An example of an inert gas is dry nitrogen.

Purging of the refrigerant circuit shall be achieved by breaking the vacuum in the system with inert gas and continuing to fill until the working pressure is achieved, then venting to atmosphere, and finally pulling down to a vacuum. This process shall be repeated until no refrigerant is within the system. The system shall be vented down to atmospheric pressure to enable work to take place.

Ensure that the outlet for the hose is not close to any potential ignition sources and that ventilation is available.

If the recovered refrigerant is clean and from good quality it can be reused for charging.

Charging procedures

In addition to conventional charging procedures, the following requirements shall be followed.

- Ensure that contamination of different refrigerants does not occur when using charging equipment. Hoses or lines shall be as short as possible to minimise the amount of refrigerant contained in them.
- Cylinders shall be kept in an appropriate position according to the instruction.
- Ensure that the refrigerating system is earthed prior to charging the system with refrigerant.
- Label the system when charging is complete (if not already).
- Extreme care shall be taken not to overfill the refrigerating system.

Prior to recharging the system, it shall be pressure tested with the appropriate inert gas. The system shall be leak-tested on completion of charging but prior to commissioning. A follow up leak test shall be carried out prior to leaving the site.

Recovery

When removing refrigerant from a system, either for servicing or decommissioning, it is recommended good practice that all refrigerants are removed safely.

For recovery during service comply to the removal and evacuation paragraph.

When decommissioning the unit containing natural refrigerants (non F-gas), no refrigerant needs to be evacuated into a cylinder and all refrigerant can be expelled with N_2 or flushed with CO_2.

The electronic leak detector can be used to check at the end of the hose if any refrigerant is coming out. If the electronic leak detector shows 0 PPM the flow of N_2 or CO_2 can be stopped and outlet of hose needs to be rechecked if the value at the end of the hose rises above 0 PPM. If this is not the case work can proceed safely.

Ensure that the outlet for the hose is not close to any potential ignition sources and that ventilation is available.

The recovery equipment shall be in good working order with a set of instructions concerning the equipment that is at hand and shall be suitable for the recovery of flammable refrigerants. In addition, a set of calibrated weighing scales shall be available and in good working order.

Hoses shall be complete with leak-free disconnect couplings and in good condition. Before using the recovery machine, check that it is in satisfactory working order, has been properly maintained and that any associated electrical components are sealed to prevent ignition in the event of a refrigerant release. Consult manufacturer if in doubt.

If compressors or compressor oils are to be removed, ensure that they have been evacuated to an acceptable level to make certain that flammable refrigerant does not remain within the lubricant. The evacuation process shall be carried out prior to returning the compressor to the suppliers. When oil is drained from a system, it shall be carried out safely.

⚠ CAUTION

Installation

- Keep level even when installing the unit.
  - To avoid vibration or water leakage.
- Use two or more people to lift and transport the unit.
  - Avoid personal injury.
- Do not install the unit in potentially explosive atmospheres.
- Connect the water for filling or refilling the heating system as specified by EN 1717/EN 61770 to avoid contamination of drinking water by return flow.

Safety Instructions

- Only persons with appropriate experience and training should handle the gas under pressure.
- Keep away from any source of ignition (including electrostatic charges).
- Do not smoke while handling the product.
- Assess the potential risks of explosive atmospheres and the need for anti-explosive equipment explosion.
- Use only non-sparking tools (while working inside the safety zone around outdoor unit.).
- Take precautionary measures against electrostatic discharge (i.e. clothes)
- Protect ODU from physical damage, not let it fall.
- Do not remove or damage the labels provided by the supplier to identify the contents of the product.
- Use only specified equipment appropriate for this product, its pressure and its operating temperature.

Safety when installing the product

- Any air vent located inside occupied space must be closed after air was released. Automatic air vents must be closed with a cap. If leaked refrigerant enters the water cycle, the gas shall not be automatically released into the occupied space.
- Safety valves have to dispose outside the building.

Safety when commissioning the product

- The cap on the air-separator located in the Outdoor Unit may never be closed.

Safety when Operating/Maintaining the product

- You ensure that the entire gas installation has been (or is regularly) checked for absence of leaks, before use.
- When repair work has been completed on the refrigeration circuit, it should be evacuated with a vacuum pump to remove air and non-condensable gases from the system before charging it with refrigerant.
- Gas detectors should be used when flammable gases/vapors are likely to be released.
- Before executing any maintenance work, have the owner of the property sign a working permit.

Operation

- Do not use the unit for special purposes, such as preserving foods, works of art, etc.
  - There is risk of damage or loss of property.
- Use a soft cloth to clean. Do not use harsh detergents, solvents, etc.
  - There is risk of fire, electric shock, or damage to the plastic parts of the unit.

- Do not step on or put anything on the unit.
  - There is risk of personal injury and failure of unit.
- Use a firm stool or ladder when cleaning or maintaining the unit.
  - Be careful and avoid personal injury.
- Do not turn on the breaker or power under condition that front panel cabinet, top cover, control box cover are removed or opened.
  - Otherwise it may cause fire, electric shock, explosion or death.
- The appliance shall be disconnected from its power source during service and when replacing parts.
- Means for disconnection must be incorporated in the fixed wiring in accordance with the wiring rules.
- The Installation kit supplied with the appliance has to be used and any old Installation kit should not be reused.
- If the supply cord is damaged, it must be replaced by the manufacturer, its service agent or similarly qualified persons in order to avoid a hazard. Installation work must be performed in accordance with the national wiring standards by authorized personnel only.
- This equipment shall be provided with a supply conductor complying with the national regulation.
- The instructions for service to be done by specialized personnel, mandated by the manufacturer or the authorized representative may be supplied in only one Community language which the specialized personnel understand.
- This appliance is not intended for use by persons (including children) with reduced physical, sensory or mental capabilities or lack of experience and knowledge, unless they have been given supervision or instruction concerning use of the appliance by a person responsible for their safety. Children should be supervised to ensure that they do not play with the appliance.

DELIVERED PARTS

Before starting installation, please make it sure that all parts are found inside the product box.

Indoor Unit Box

Item	Image	Quantity
Indoor unit	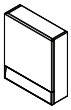	1
Installation Sheet		1
Connecting Harness (Used When installing a LG Backup Heater)		1
Installation Manual (1Sheet)		1
Owner's / Installation manual (Simple)		1
Initial installation Guide Manual		1

Outdoor Unit Box

Item	Image	Quantity
Outdoor Unit	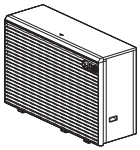	1
Drain Cap		6* 7**
Drain Nipple		1
Strainer		1
Damper		4 **** 6 ***
Sling Belt		2 *

※ It can be different by model.

*: UB*0
**: U*41
***: UB60
****: U*4*

Downward piping kit (Optional)

Item	Image	Quantity
Rubber pipe		1
Rubber pipe		1
Clamp		4

INSTALLATION TOOLS

Figure	Name	Figure	Name
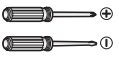	Screw driver		Ohmmeter
	Electric drill		Ammeter
	Measuring tape, Knife		Leak detector (Suitable for R290)
	Hole core drill	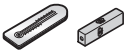	Thermometer, Horizontal meter
	Spanner		Pliers
	Torque wrench	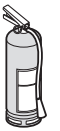	Fire extinguisher

GENERAL INFORMATION

Model information

Additional information about all possible combinations including Energy labels and ErP datasheets can be found on following website:
https://www.lg.com/global/support/cedoc/cedoc

NOTE

Search for outdoor unit's model name on that website.

Operating condition

- Maximum operating temperature of water : 75 °C
- Minimum operating temperature of water : 15 °C
- Maximum inlet water pressure : 0.3 MPa
- Minimum inlet water pressure : 0.03 MPa

Buyer Model Name

Outdoor unit

Refrigerant	No.								
	1	2	3	4	5	6	7	8	9
R290	H	M	16	1	H	F	-	UB6	0

No.	Signification
1	Air-to-Water-Heat Pump
2	Classification - M: Monobloc
3	Heating Capacity - E.g) 9 kW '09' - E.g) 16 kW '16'
4	Electrical ratings - 1: 1Ø 220-240 V~ 50 Hz - 3: 3Ø 380-415 V~ 50 Hz
5	Leaving Water Combination - H: High Temperature
6	Refrigerant - F: R290
7	Function - X: Models for specific customers - D#: Hydrosplit
8	Chassis Name - UA4: UN36A Chassis - UB4: UN36B Chassis - UB6: UN60B Chassis
9	Series number

Indoor unit

Refrigerant	No.										
	1	2	3	4	5	6	7	8	9	10	11
R290	P	H	C	S	1	-	-	-	-	-	-

No.	Signification
1	P : Part or Accessory
2,3	HL : Heating AWHP Accessory kit HC : Heating AWHP Control KIT
4	T : Sanitary Tank L : Solar Thermal S : Single unit
5	In order of performance, core parts, and development in case of change (August 2010, starting from 0)

Parts and Dimensions

Indoor unit

(Unit : mm)

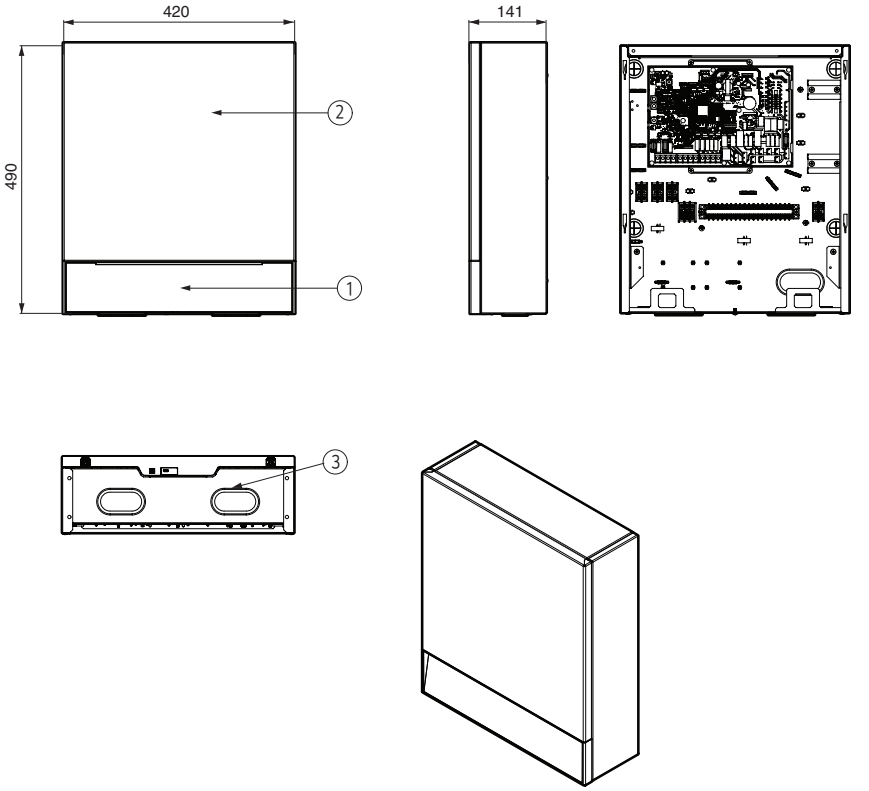

* The feature may be vary according to the type of model.

Description

No.	Name	Remark
1	Contorl Panel	Human Machine Interface
2	Panel Assembly, Front	SGCC T1.0 ESSENCE WHITE
3	Base Assembly, Indoor	PCB and terminal blocks

Outdoor unit : External

[UB40 Series]

(Unit : mm)

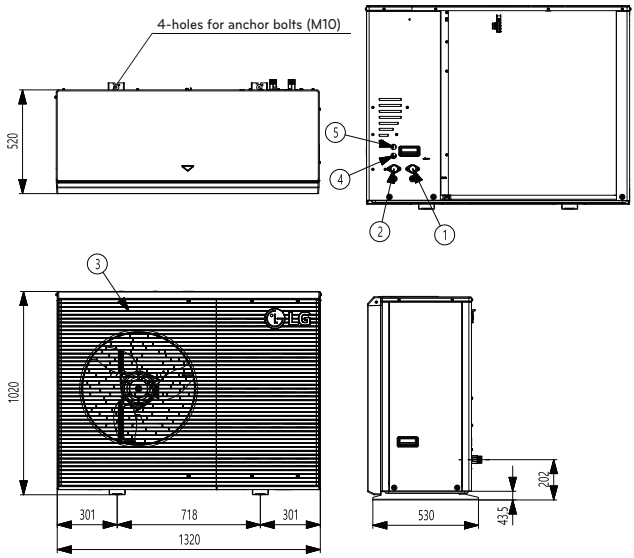

Description

No	Name
1	Entering Water Pipe (Male PT 1 inch)
2	Leaving Water Pipe (Male PT 1 inch)
3	Air discharge Grille
4	Cable Conduit (Power)
5	Cable conduit (Communication)

Outdoor unit : Internal

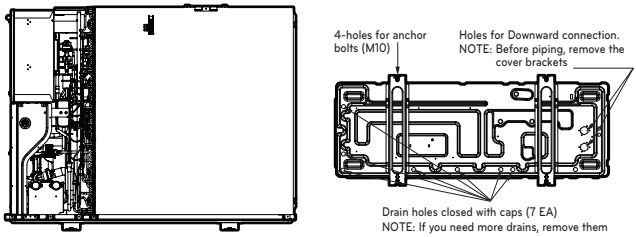

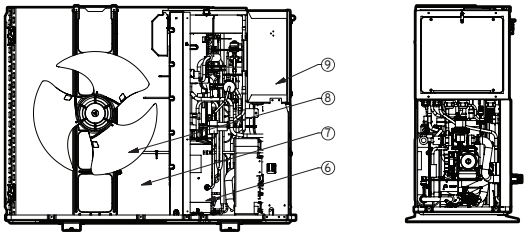

Description

No	Name	Remark
6	Compressor	Increase pressure of the refrigerant.
7	Fin tube Heat Exchanger	Heat exchange between refrigerant and air.
8	Fan	Circulating the air.
9	Control Box	PCB and terminal blocks.

Outdoor unit : External

[UB60 Series]

(Unit : mm)

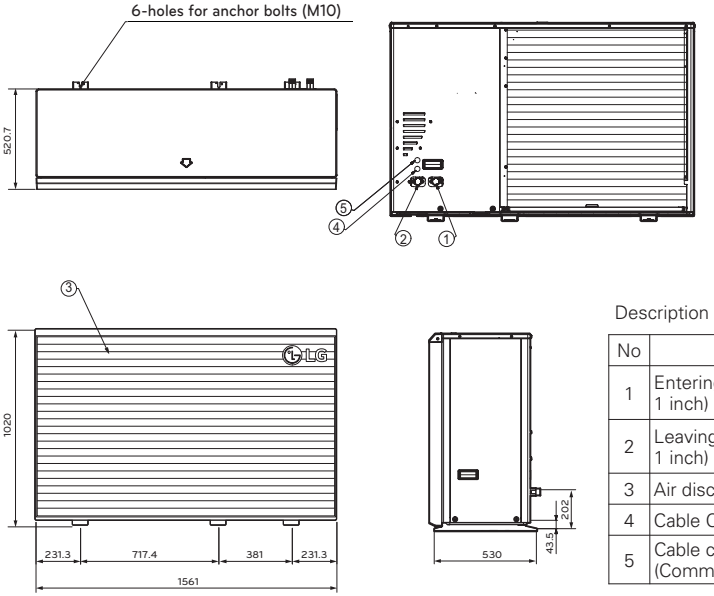

Description

No	Name
1	Entering Water Pipe (Male PT 1 inch)
2	Leaving Water Pipe (Male PT 1 inch)
3	Air discharge Grille
4	Cable Conduit (Power)
5	Cable conduit (Communication)

Outdoor unit : Internal

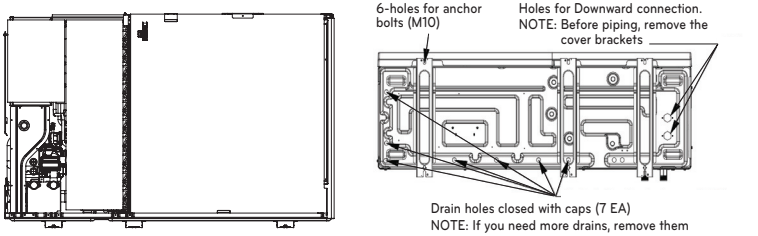

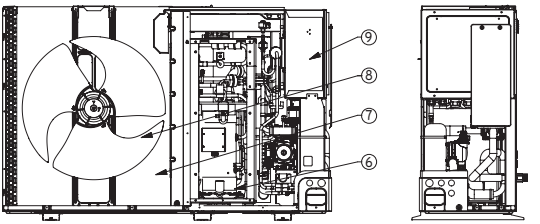

Description

No	Name	Remark
6	Compressor	Increase pressure of the refrigerant.
7	Fin tube Heat Exchanger	Heat exchange between refrigerant and air.
8	Fan	Circulating the air.
9	Control Box	PCB and terminal blocks.

Outdoor unit : External

[UA41 Series]

(Unit : mm)

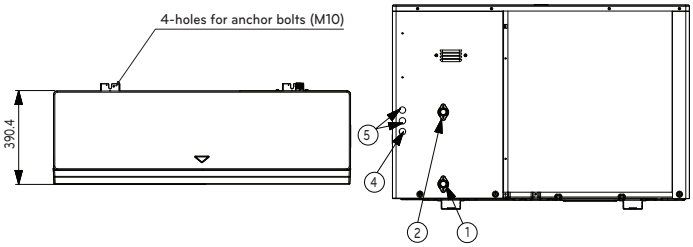

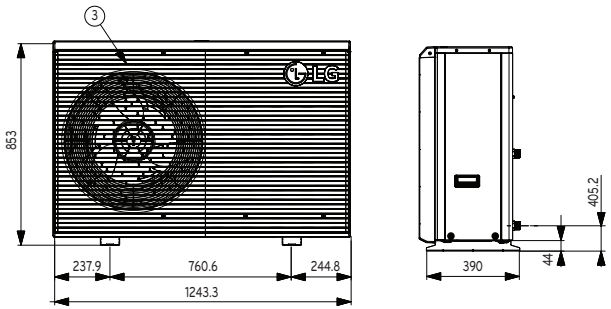

Description

No	Name
1	Entering Water Pipe (Male PT 1 inch)
2	Leaving Water Pipe (Male PT 1 inch)
3	Air discharge Grille
4	Cable Conduit (Unit Power)
5	Cable Conduit (Low voltage)

Outdoor unit : Internal

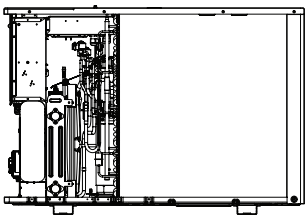

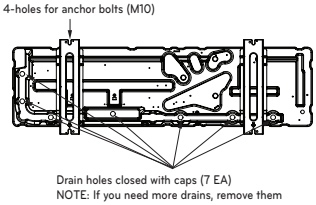

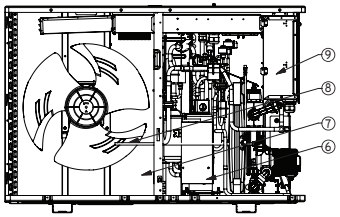

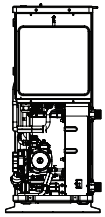

Description

No	Name	Remark
6	Compressor	Increase pressure of the refrigerant.
7	Fin tube Heat Exchanger	Heat exchange between refrigerant and air.
8	Fan	Circulating the air.
9	Control Box	PCB and terminal blocks.

Outdoor unit : External

[UB41 Series]

(Unit : mm)

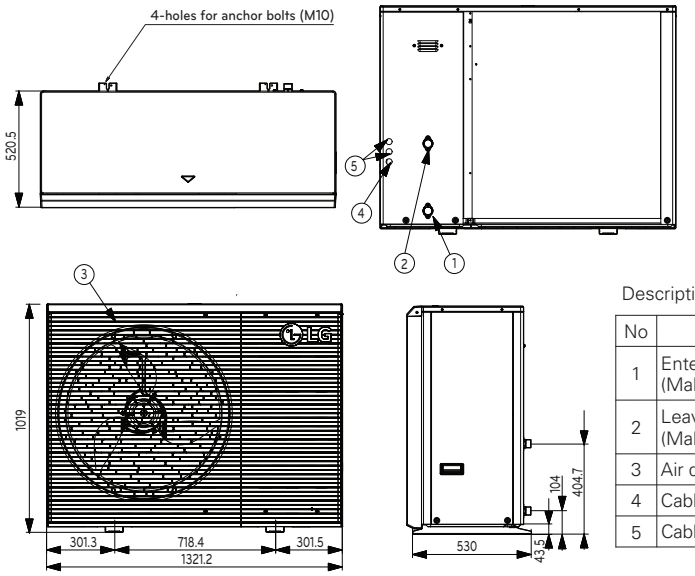

Description

No	Name
1	Entering Water Pipe (Male PT 1 inch)
2	Leaving Water Pipe (Male PT 1 inch)
3	Air discharge Grille
4	Cable Conduit (Unit Power)
5	Cable Conduit (Low voltage)

Outdoor unit : Internal

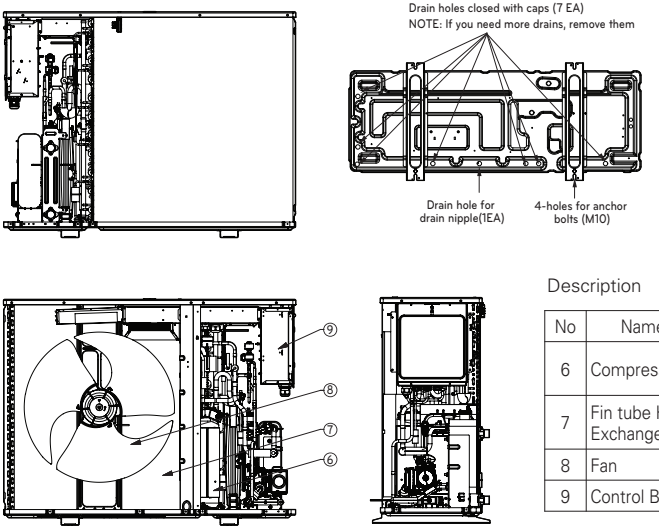

Description

No	Name	Remark
6	Compressor	Increase pressure of the refrigerant.
7	Fin tube Heat Exchanger	Heat exchange between refrigerant and air.
8	Fan	Circulating the air.
9	Control Box	PCB and terminal blocks.

Control Parts

Control Unit

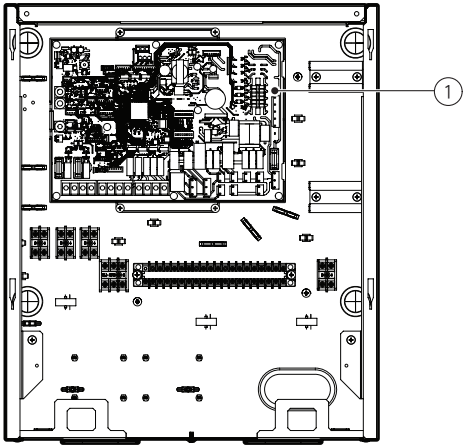

Description

No	Name	Remark
1	Main PCB	The main PCB(Printed Circuit Board) controls the functioning of the unit and the connected accessories

Control Panel



Operation display window	- Operation and Settings status display
On/Off button	- Turn on/off the heat pump - Enable/Disable modes
Menu button	- Enter menu - Confirm settings

Typical Installation Example

⚠ CAUTION

For detailed electric wiring and water piping, please contact authorized installer.
It is recommended to install a buffer tank - unless minimum flow rate can be guaranteed elsewise. Especially in older houses, it is recommended to use a magnetic filter.

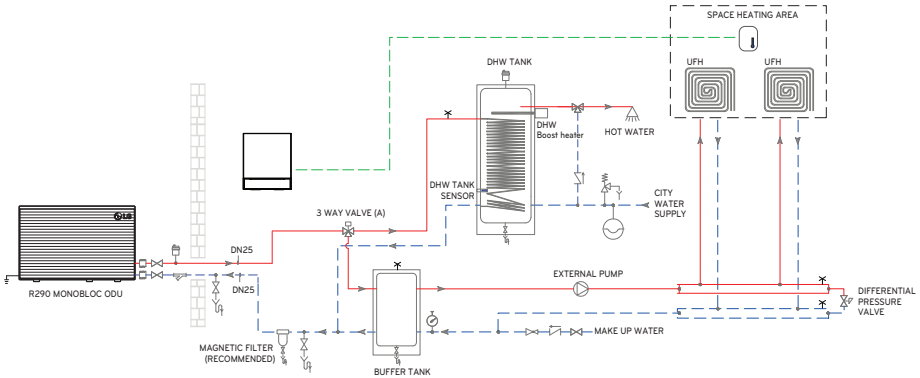

※ It can be different by model.

NOTE

The exemplary diagram does not include all necessary safety and installation devices.
This is not an 'as-built drawing'.

Description

	Circulation Pump		Motorized 3 Way Valve		Check Valve		Deluxe Remote Controller
	Expansion Tank		Motorized 2 Way Valve		Safety Relief Expansion Tank Valve with drain		Remote Room Air Sensor
	Air Vent		Differential Pressure Valve		Y-type strainer		Dry Contact
	Pressure Gauge		Thermostatic Mixing Valve		Flow Sensor		Thermostat
	Flexible Connection		Shut Off Valve		Magnetic Contactor		Manual air vent
	Drain		Pressure Reducing Valve				

※ For more installation scenes, visit http://partner.lge.com/ or contact your local LG office. Select Region ⟶ Doc. Library ⟶ (Product) Heating ⟶ Application Guide ⟶ Referenced Drawing for Application

Cycle Diagram

[UB40 Series]

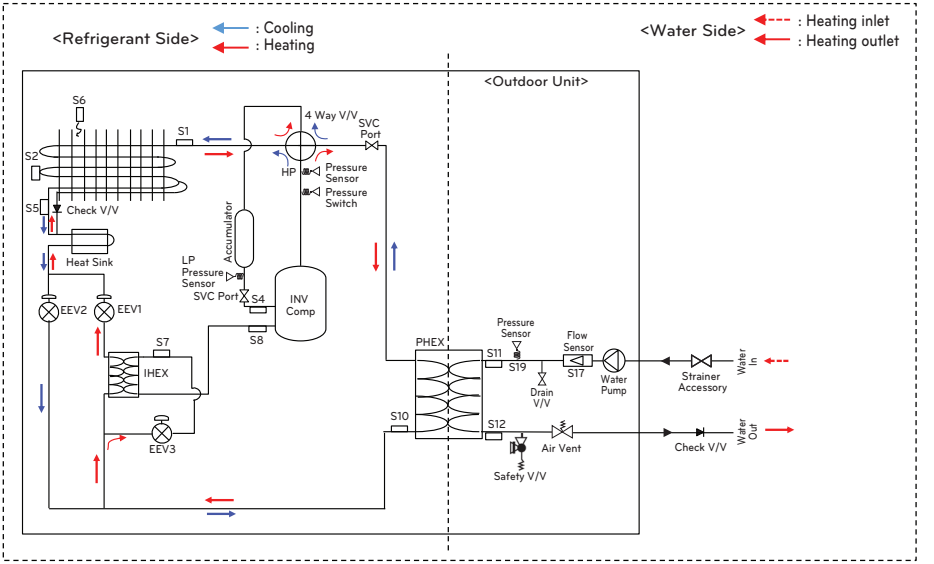

Description

Category	Symbol	Meaning
Refrigerant side	S1	Outdoor-HEX gas temp. sensor
	S2	Outdoor-HEX middle temp. sensor
	S3	Compressor discharge temp. sensor
	S4	Compressor suction pipe temp. sensor
	S5	Outdoor-HEX temp. sensor
	S6	Outdoor air temp. sensor
	S7	Compressor-injection pipe IN temp. sensor
	S8	Compressor-injection pipe OUT temp. sensor
	S10	PHEX liquid temp. sensor
	LP	Low pressure sensor
	HP	High pressure sensor
Water Side	S11	Inlet water temp. sensor
	S12	Outlet water temp. sensor
	S17	Flow sensor
	S19	Water pressure sensor

[UB60 Series]

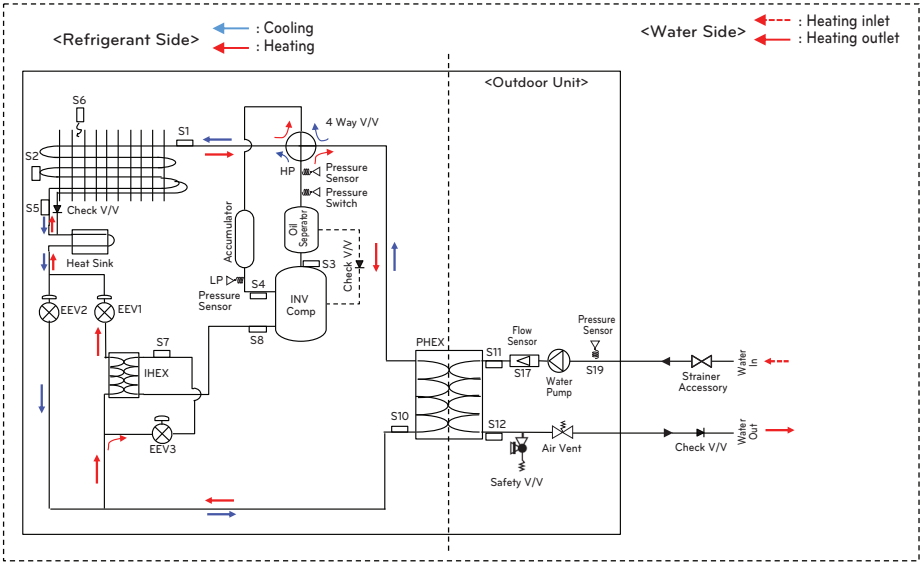

Description

Category	Symbol	Meaning
Refrigerant side	S1	Outdoor-HEX gas temp. sensor
	S2	Outdoor-HEX middle temp. sensor
	S3	Compressor discharge temp. sensor
	S4	Compressor suction pipe temp. sensor
	S5	Outdoor-HEX temp. sensor
	S6	Outdoor air temp. sensor
	S7	Compressor-injection pipe IN temp. sensor
	S8	Compressor-injection pipe OUT temp. sensor
	S10	PHEX liquid temp. sensor
	LP	Low pressure sensor
	HP	High pressure sensor
Water Side	S11	Inlet water temp. sensor
	S12	Outlet water temp. sensor
	S17	Flow sensor
	S19	Water pressure sensor

[UA41, UB41 Series]

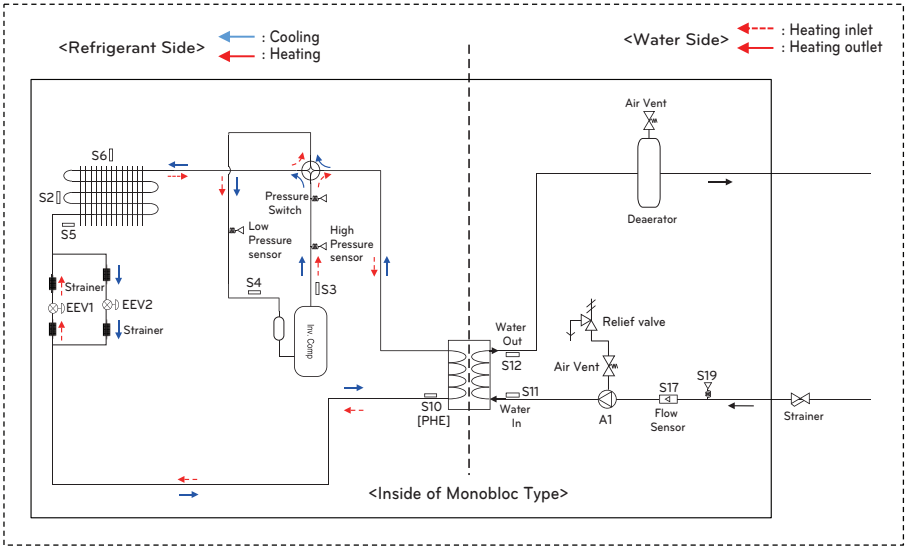

Description

Category	Symbol	Meaning
Refrigerant side	S10	PHEX liquid temp. sensor
	S3	Compressor-dlischarge pipe temperature sensor
	S4	Compressor-suction pipe temperature sensor
	S2	Outdoor-HEX middle temp. sensor
	S5	Outdoor-HEX temp. sensor
	S6	Outdoor air temperature sensor
	EEV1	Electronic Expansion Valve (Heating)
	EEV2	Electronic Expansion Valve (Cooling)
Water Side	S11	Inlet water temperature sensor
	S12	Outlet water temperature sensor
	S17	Flow sensor
	S19	Water pressure sensor
	A1	Main Water Pump

Wiring Diagram

Indoor Unit: PHCS1 [PHCS1]

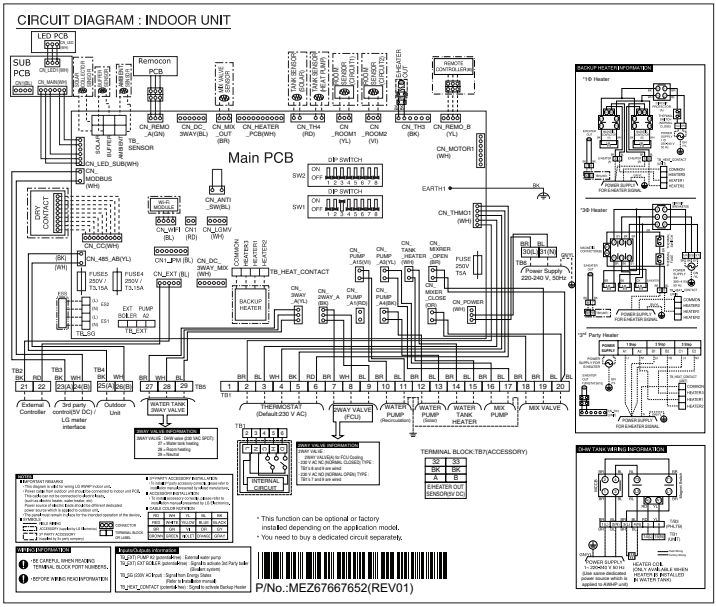

Outdoor Unit: UA41 Series, 1Ø

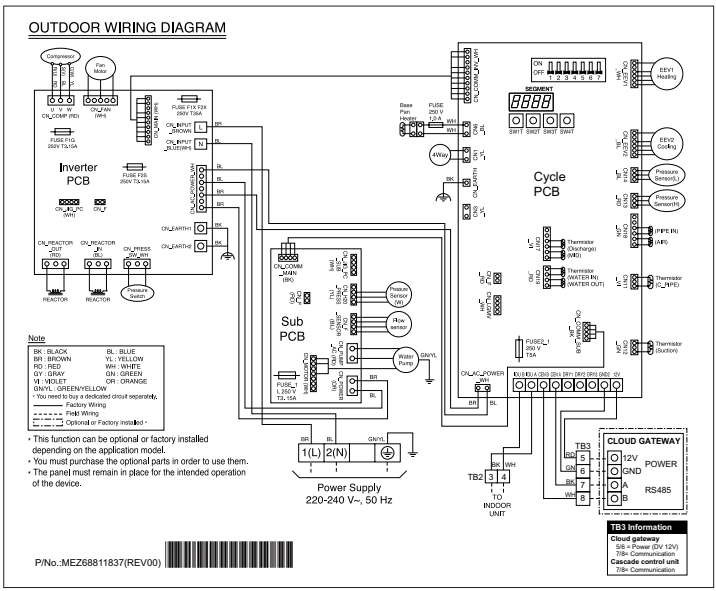

Outdoor Unit: UB41 Series, 1Ø

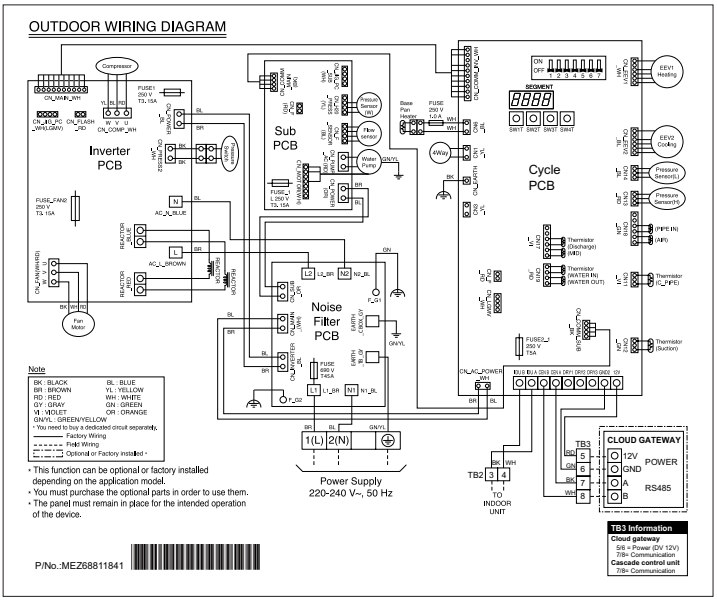

Outdoor Unit: UA41, UB41 Series, 3Ø

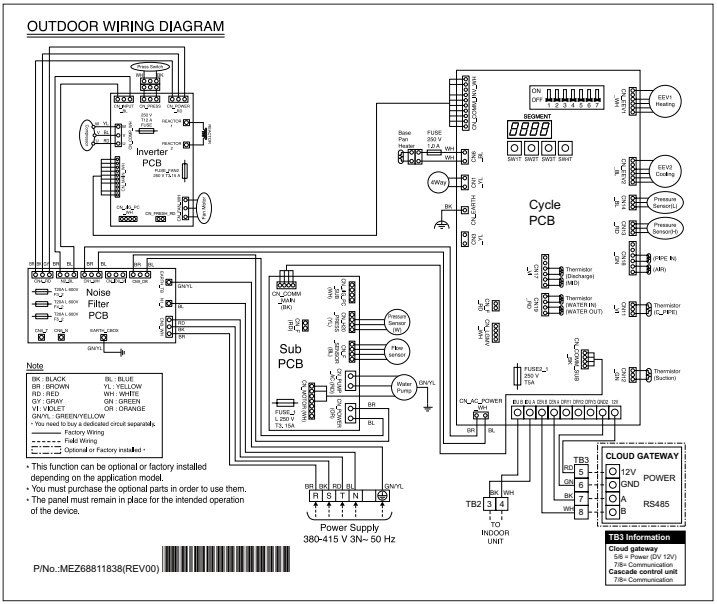

Outdoor Unit: UB40 Series, 1Ø

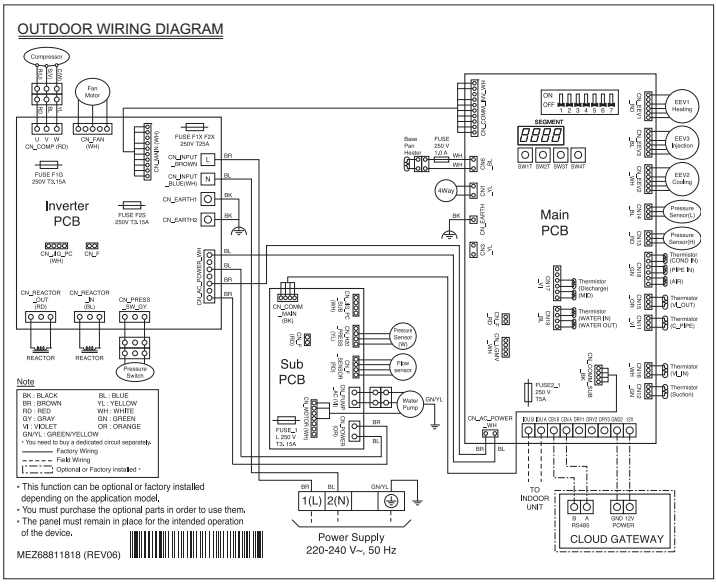

Outdoor Unit: UB40 Series, 3Ø

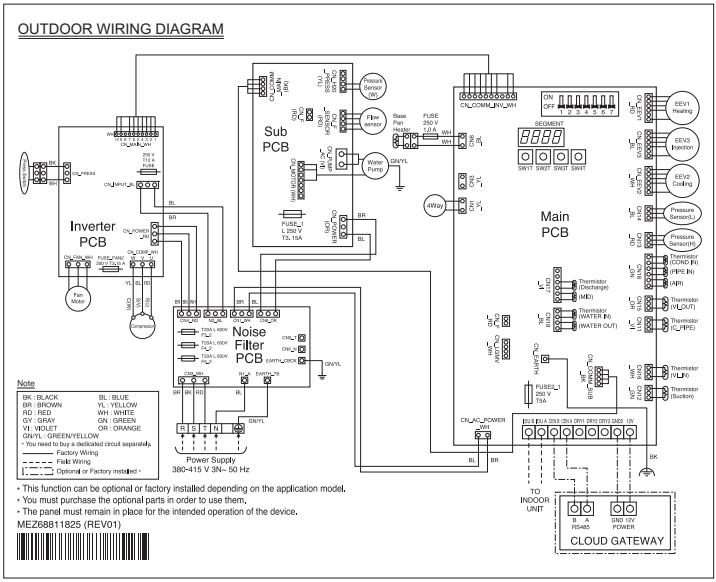

Outdoor Unit: UB60 Series, 1Ø

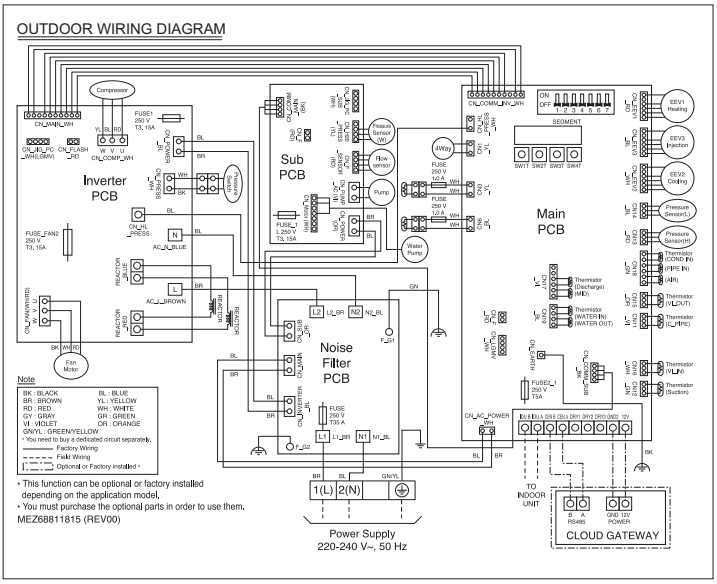

Outdoor Unit: UB60 Series, 3Ø

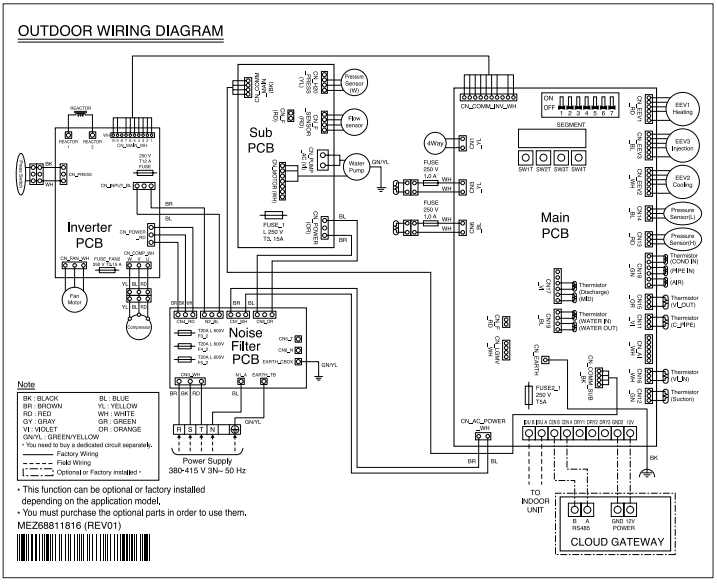

INSTALLATION OF OUTDOOR UNIT

The outdoor unit is installed outside to exchange heat with ambient air.
Therefore, it is important to secure proper space around the outdoor unit and care for specific external conditions. This chapter presents a guide to install the outdoor unit, make a route to connect with the indoor, and what to do when installed around seaside.

Conditions to be considered when installing the outdoor unit

For noise reduction

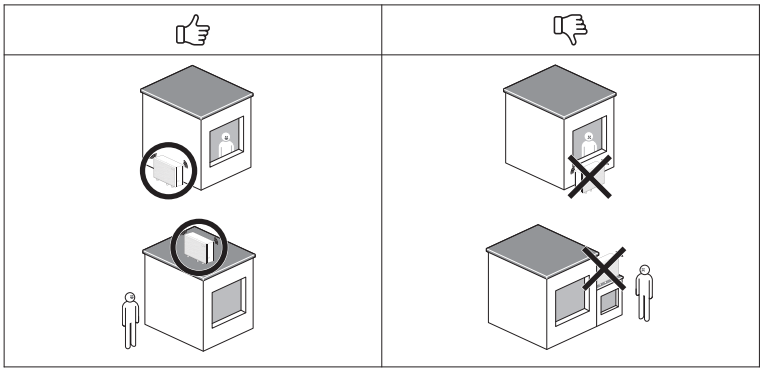

For good ventilation

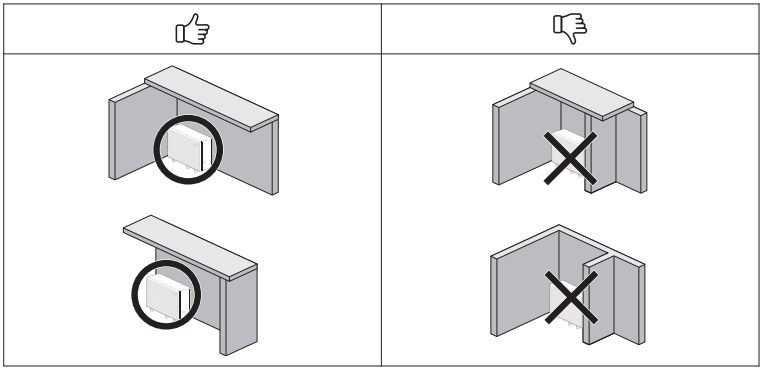

NOTE

- Please do not block the slits in the exterior panels!

※ It can be different by model.

Minimum Operation Space

Following distances around the outdoor unit must be respected under any condition for normal operation. The distances are only for operation not to be seen as safety zone.

Installation space around each unit

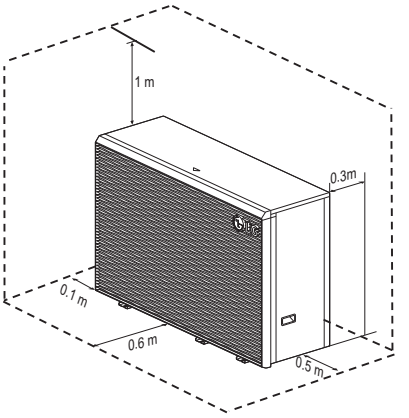

Multiple installation

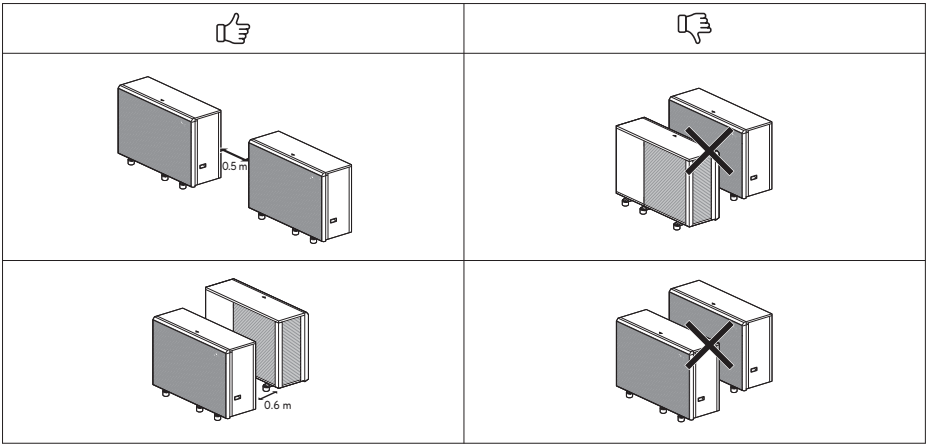

※ It can be different by model.

Safety Zone

Since the outdoor unit contains flammable refrigerant, a separate safety zone must be defined near the outdoor unit.



⚠ CAUTION

Be very careful for Safety Zone

- There must be no building openings. (windows, doors, roof windows, etc.)
- There must be no external and outlet air openings. (e.g. intakes of central ventilation system)
- There should be no building boundaries, adjacent buildings, passageways, or roads.
- Drainage system inlets, pump shafts, downspouts, and bath lakes should not be present.
- Other grooves, bottoms and shafts must not be present
- There should be no Roof avalanches.
- Ignition sources (such as electrical switches or lamps) must not be used.
- No parts should have a surface temperature higher than 360 °C.
- Open flames are strongly prohibited!

Above special safety precautions must be taken within the areas marked below.

1 Ground installation no obstacle

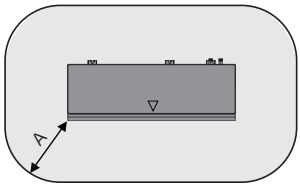

(Unit : mm)

A	1 000

2 Ground installation in front of the wall

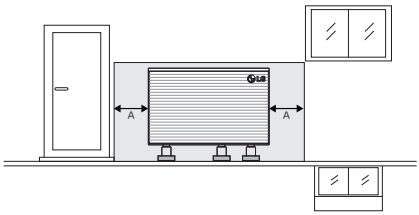

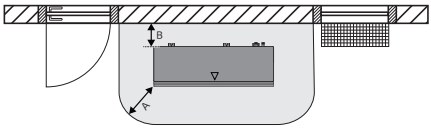

(Unit : mm)

A	1 000
B	300

※ It can be different by model.

3 Ground installation in a corner with wall at the left side

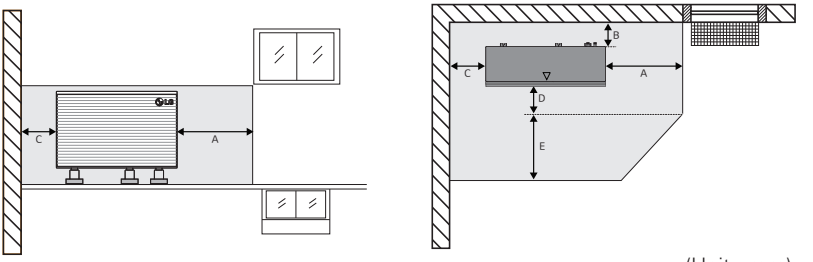

(Unit : mm)

A	1 000
B	300
C	500
D	600
E	1 800

4 Ground installation in a corner with wall at the right side

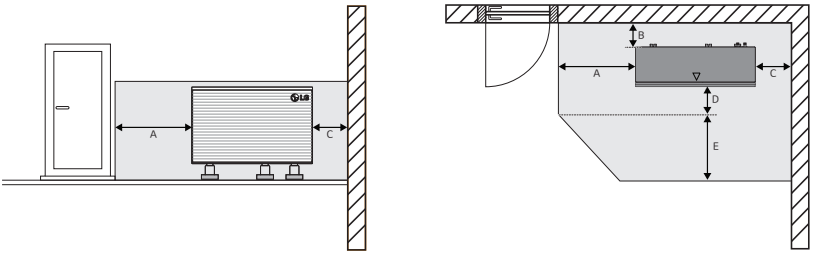

(Unit : mm)

A	1 000
B	300
C	500
D	600
E	1 800

※ It can be different by model.

Installation at Seaside

⚠ CAUTION

- Unit should not be installed in areas where corrosive gases, such as acid or alkaline gas, are produced.
- Do not install the product where it could be exposed to sea wind (salty wind) directly. It can result corrosion on the product. Corrosion, particularly on the condenser and evaporator fins, could cause product malfunction or inefficient performance.
- If outdoor unit is installed close to the seaside, it should avoid direct exposure to the sea wind. Otherwise it needs additional anti-corrosion treatment on the heat exchanger.

Selecting the location(Outdoor Unit)

- If the outdoor unit is to be installed close to the seaside, direct exposure to the sea wind should be avoided. Install the outdoor unit on the opposite side of the sea wind direction.

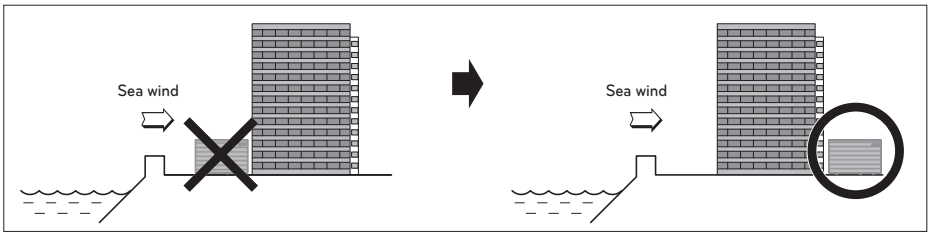

- In case, to install the outdoor unit on the seaside, set up a windbreak not to be exposed to the sea wind.

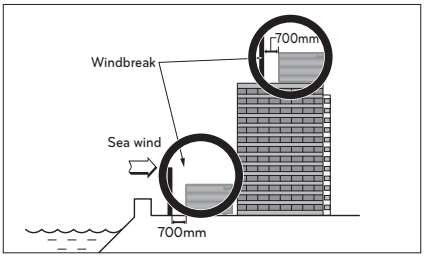

- It should be strong enough like concrete to prevent the sea wind from the sea.
- The height and width should be more than 150% of the outdoor unit.
- It should be keep more than 700 mm of space between outdoor unit and the windbreak for easy air flow.
- Select a well-drained place. Periodic (more than once/year) cleaning of the dust or salt particles stuck on the heat exchanger by using water.
- If you can't meet above guide line in the seaside installation, please contact your supplier for the additional anti-corrosion treatment.

Seasonal wind and cautions in winter

- Sufficient measures are required in a snow area or severe cold area in winter so that product can be operated well.
- Get ready for seasonal wind or snow in winter even in other areas.
- Install a suction and discharge duct not to let in snow or rain.
- Install the outdoor unit not to come in contact with snow directly. If snow piles up and freezes on the air suction hole, the system may malfunction. If it is installed at snowy area, attach the hood to the system.
- Install the outdoor unit at the higher installation console by 500 mm than the average snowfall (annual average snowfall) if it is installed at the area with much snowfall.
- Where snow accumulated on the upper part of the Outdoor Unit by more than 100 mm, always remove snow for operation.

⚠ CAUTION

- The height of H frame must be more than 2 times the snowfall and its width shall not exceed the width of the product. (If width of the frame is wider than that of the product, snow may accumulate)
- Don't install the suction hole and discharge hole of the Outdoor Unit facing the seasonal wind.

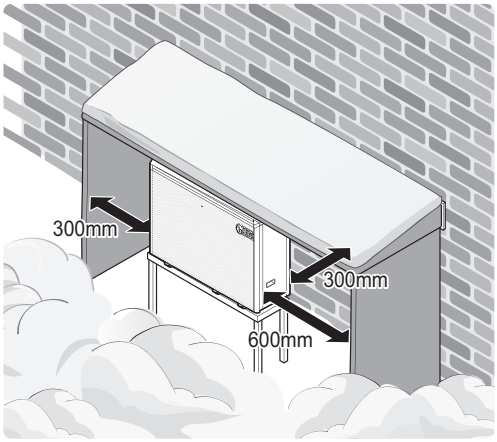

※ It can be different by model.

Transporting the Unit

- When carrying the suspended unit, pass the ropes between legs of base panel under the unit.
- Always lift the unit with ropes attached at four points so that impact is not applied to the unit.
- Attach the ropes to the unit at an angle Ⓐ of 40° or less.
- Use only accessories and parts which are of the designated specification when installing.
- Do not use a forklift without a pallet underneath the unit.
- Be careful not to damage the product when moving the forklift.

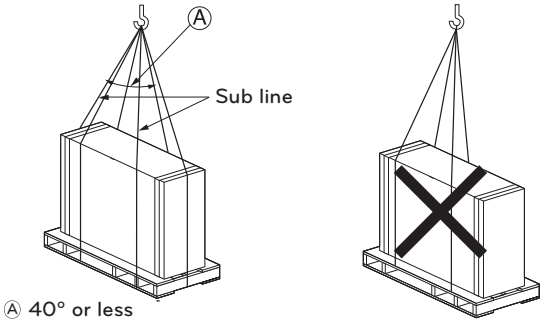

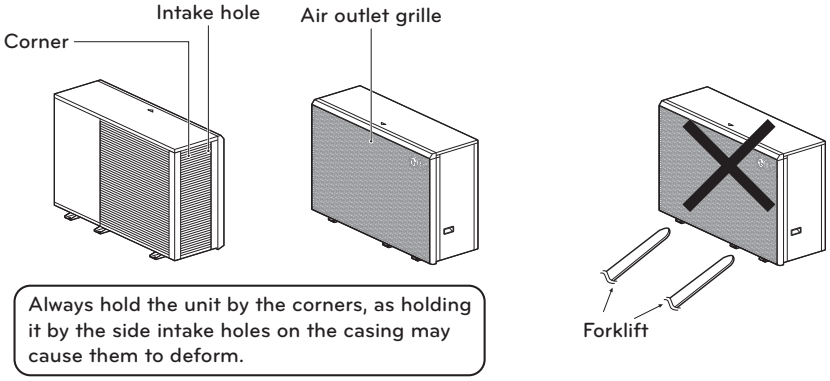

※ It can be different by model.

⚠ CAUTION

Be very careful while carrying the product.

- Do not have only one person carry product if it is more than 20 kg.
- PP bands are used to pack some products. Do not use them as a mean for transportation because they are dangerous.
- Do not touch heat exchanger fins with your bare hands. Otherwise you may get a cut in your hands.
- Tear plastic packaging bag and scrap it so that children cannot play with it. Otherwise plastic packaging bag may suffocate children to death.
- When carrying the unit, be sure to support it at four points.
  Carrying in and lifting with 3-point support may make Outdoor Unit unstable, resulting in a fall.
- Use 2 belts of at least 8 m long.
- Place extra cloth or boards in the locations where the casing comes in contact with the sling to prevent damage.
- Hoist the unit making sure it is being lifted at its center of gravity.
- Do not tilt product by more than the maximum angle of 45°.

1 Put the sling belt (delivered as accessory) through the unit's foot.
2 Carry the unit using the sling belts and the unit's handle (right), and put it onto the installation structure.
3 Remove the sling belts and dispose them.

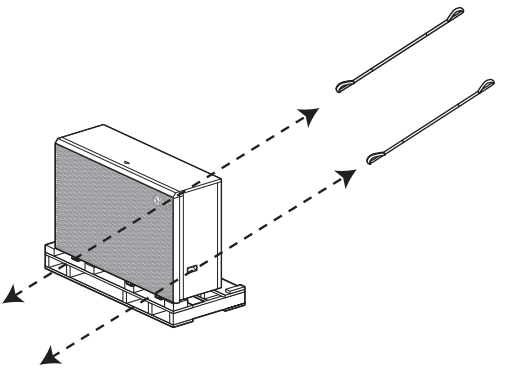

※ It can be different by model.

Foundation for Installation

- Check the strength and level of the installation ground so that the unit will not cause any operating vibration or noise after installation.
- Fix the unit securely by means of the foundation bolts. Prepare 6 sets(4 sets) of M12 foundation bolts, nuts and washers available on the market.
- It is best to screw in the foundation bolts until their length are 20 mm from the foundation surface.
- When installing the unit on the ground, install a separate pedestal with enough height to install the drain nipple and higher than the average snowfall in your area.

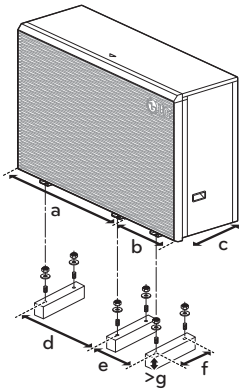

(Unit : mm)

	UB60 Series
a	717
b	381
c	486
d	717
e	381
f	486
g	150

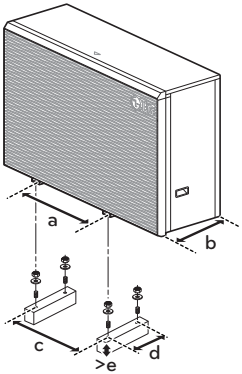

(Unit : mm)

	UA41 Series	UB40, UB41 Series
a	760.6	718.4
b	360	486
c	760.6	718.4
d	360	486
e	150	150

⚠ WARNING

- Be sure that condensate does not discharge onto road to avoid accumulated freezing of condensate

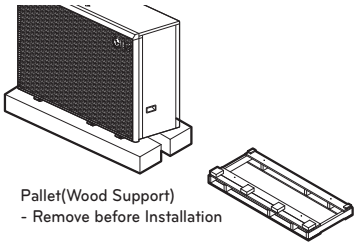

Pallet(Wood Support)
- Remove before Installation

1 Section of condensate drain pipe exposed to open air must be insulated.

2 If condensate is drained into a gravel-bed, the pipe must be directed into frost-free area. The gravel must be able to absorb up to 100 l of condensate per day.

3 If condensate water is drained into a rainwater sewer or other drainage pipe, note the slope of the pipe and make sure the pipe is frost-free. Alternatively, route the condensate back into the building and connect directly to the building's sewage system using a syphon.

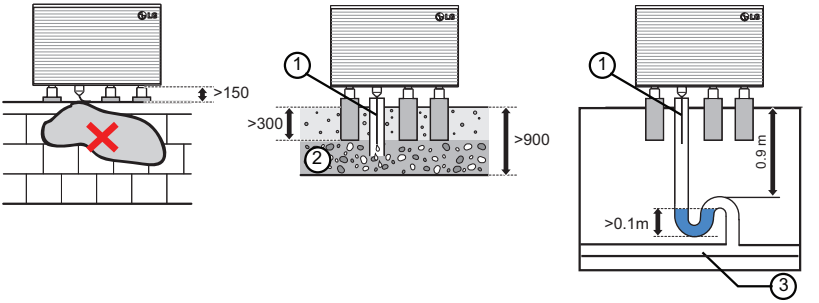

INSTALLATION OF INDOOR UNIT

The indoor unit should be installed in a room that allows easy access to outdoor unit and heating system both.

In this chapter conditions for installation place is described. In addition, considerations when installing accessories or 3rd party accessories are described, too.

Conditions where Indoor Unit is Installed

Specific conditions are required for installation place such as service space, wall mounting, water pipe length and height, total volume of water, adjusting expansion vessel, and water quality.

General Considerations

Followings are should be considered before the installation of the indoor unit.

- Choose a place with water-resistant floor and access to the drainage system of the house.
- Service space should be secured.
- No flammable materials around the indoor unit.
- Mice can not be appeared to prevent entering the indoor unit or attacking wires.
- Do not place anything in front of the indoor unit to ensure air circulation around the indoor unit.
- Do not place anything below the unit that can be damaged by leaking water.

Service Space

- Ensure that the spaces indicated by arrows around bottom, side, and top side.
- Wider spaces are preferred for easy maintenance and piping.
- If minimum service space is not secured, air circulation can be troubled and internal parts of the indoor unit can be damaged by overheating.

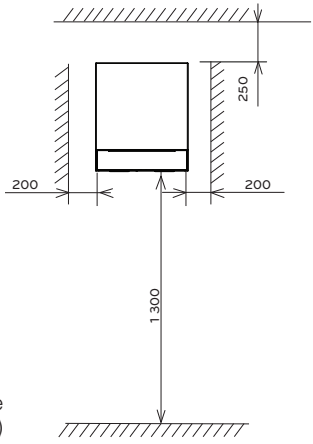

Minimum service space
(unit : mm)

NOTE

- The default setting of the product is for heating only. If cooling function is used, DIP S / W 4 should be turned ON and additional drain pan accessory should be installed.

Mounting to wall

Step 1. Loosen the two screws at both ends of the bottom of the Control Panel and lower the Control Panel.

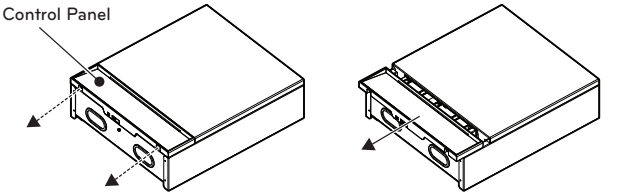

Step 2. After lowering the control panel, loosen the two visible screws and lift the front panel to remove it.

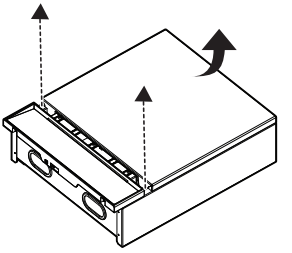

Step 3. Attach "Installation Sheet" to the wall and mark the location of bolts.
This sheet helps to find correct location of bolts.

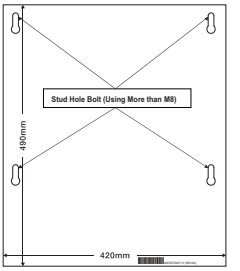

Step 4. Detach the Installation sheet. Screw bolts at the hole marks on the wall.
When screwing bolts, use M8 ~ M11 anchor bolts to secure hanging the indoor unit.

NOTE

Self drilling screw can be used as alternatives of M8 ~ M11 anchor bolts. But M8 ~ M11 anchor bolts are more preferred.

Step 5. Hang the indoor unit at the supporting plate.

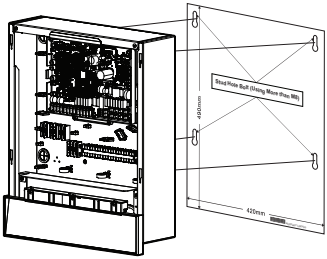

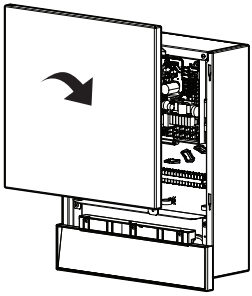

Step 6. Close the front cover and tighten the screws loosened in steps 1 and 2. Be careful not to catch the harness on the cover during this process.

⚠ CAUTION

The two harnesses that connect to the control panel should go through the hole shown below. If you disconnected the harnesses during installation, connect them to the PCB through these hole.

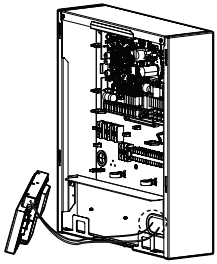

ELECTRICAL WIRING

General considerations and warnings

- Follow ordinance of your governmental organization for technical standard related to electrical equipment, wiring regulations and guidance of each electric power company.

⚠ WARNING

- Be sure to have authorized electrical engineers do the electric work using special circuits in accordance with regulations and this installation manual. If power supply circuit has a lack of capacity or electric work deficiency, it may cause an electric shock or fire.

- Install the Unit transmission line away from the power source wiring so that it is not affected by electric noise from the power source. (Do not run it through the same conduit.)
- Be sure to provide designated grounding work to Unit.

⚠ CAUTION

- Be sure to correct the unit to earth. Do not connect earth line to any gas pipe, liquid pipe, lightening rod or telephone earth line. If earth is incomplete, it may cause an electric shock.

- Give some allowance to wiring for electrical part box of Units, because the box is sometimes removed at the time of service work.
- Never connect the main power source to terminal block of transmission line. If connected, electrical parts will be burnt out.
- Only the transmission line specified should be connected to the terminal block for Unit transmission.

⚠ CAUTION

- This product have reversed phase protection detector that only works when the power is turned on. If there exists black out or the power goes on and off which the product is operating, attach a reversed phase protection circuit locally. running the product in reversed phase may break the compressor and other parts.
- Use the 2-core shield cables for communication lines. Never use them together with power lines.
- The conductive shielding layer of cable should be grounded to the metal part of both units.
- Never use multi-core cable
- As this unit is equipped with an inverter, to install a phase leading capacitor not only will deteriorate power factor improvement effect, but also may cause capacitor abnormal heating. Therefore, never install a phase leading capacitor.
- Make sure that the power unbalance ratio is not greater than 2 %. If it is greater, the unit's lifespan will be reduced.
- Introducing with a missing N-phase or with a mistaken N-phase will break the equipment

General Consideration

Followings are should be considered before beginning indoor unit wiring.

- Field-supplied electrical components such as power switches, circuit breakers, wires, terminal boxes, etc should be properly chosen with compliance with national electrical legislation or regulation.
- Make it sure that supplied electricity is enough to operate the product including outdoor unit, electric heater, water tank heater, etc. The capacity of fuse also selected according to the power consumption.
- The main electricity supply should be dedicated line. Sharing main electricity supply with other devices such as washing machine or vacuum cleaner is not permitted.

⚠ CAUTION

- Before starting wiring job, the main electricity supply should be turned off until wiring is completed.
- When adjusting or changing wiring, the main electricity supply should be turned off and ground wire should be connected securely.
- Installation place should be free from the attack of wild animal. For example, mice's wire attacking or frog's entering into the indoor unit may cause critical electrical accident.
- All power connections should be protected from dew condensation by thermal insulation.
- All electrical wiring should comply with national or local electrical legislation or regulation.
- The ground should be connected exactly. Do not earth the product to the copper pipe, steel fence at the veranda, city water outlet pipe, or any other conductivity materials.
- Fix all cable using cord clamp tightly. (When cable is not fixed with cord clamp, use additionally supplied cable ties.)

When the connection line between the indoor unit and outdoor unit is over 40 m, connect the telecommunication line and power line separately.

In order to avoid a hazard due to inadvertent resetting of the thermal cut-out, this appliance must not be supplied through an external switching device, such as a timer, or connected to a circuit that is regularly switched on and off by the utility.

If the supply cord is damaged, it must be replaced by the manufacturer, its service agent or similarly qualified persons in order to avoid a hazard.

Point for attention regarding quality of the public electric power supply

- European/International Technical Standard setting the limits for voltage changes, voltage fluctuations and flicker in public low-voltage supply systems for equipment with rated current ≤ 75 A.
- European/International Technical Standard setting the limits for harmonic currents produced by equipment connected to public low-voltage systems with input current ≤16 A of > 75 A per phase.

The Outdoor unit (HM091HF UB40, HM071HF UB40, HM091HFD# UA41, HM071HFD# UA41, HM051HFD# UA41)

This equipment complies with IEC (EN) 61000-3-12 in harmonic currents emission limits corresponding Rsce =33.

This equipment complies with IEC (EN) 61000-3-3.

The Outdoor unit (HM093HF UB40, HM073HF UB40)

This equipment complies with IEC (EN) 61000-3-12 provided that the short-circuit power Ssc is greater than or equal to 1339 kVA at the interface point between the user's supply and the public system. It is the responsibility of the installer or user of the equipment to ensure, by consultation with the distribution network operator if necessary, that the equipment is connected only to a supply with a short-circuit power Ssc greater than or equal to 1339 kVA.

This equipment complies with IEC (EN) 61000-3-3.

The Outdoor unit (HM093HFD# UA41, HM073HFD# UA41)

This equipment complies with IEC (EN) 61000-3-12 provided that the short-circuit power Ssc is greater than or equal to 2294 kVA at the interface point between the user's supply and the public system. It is the responsibility of the installer or user of the equipment to ensure, by consultation with the distribution network operator if necessary, that the equipment is connected only to a supply with a short-circuit power Ssc greater than or equal to 2294 kVA.

This equipment complies with IEC (EN) 61000-3-3.

The Outdoor unit (HM161HF UB60, HM141HF UB60, HM121HF UB60, HM161HFD# UB41, HM141HFD# UB41, HM121HFD# UB41)

This equipment complies with IEC (EN) 61000-3-12 in harmonic currents emission limits corresponding Rsce =33.

This equipment complies with IEC (EN) 61000-3-3.

The Outdoor unit (HM163HF UB60, HM143HF UB60, HM123HF UB60, HM093HFX UB60)

This equipment complies with IEC (EN) 61000-3-12.

This equipment complies with IEC (EN) 61000-3-3.

The Outdoor unit (HM163HFD# UB41, HM143HFD# UB41, HM123HFD# UB41)

This equipment complies with IEC (EN) 61000-3-12 provided that the short-circuit power Ssc is greater than or equal to 2819 kVA at the interface point between the user's supply and the public system. It is the responsibility of the installer or user of the equipment to ensure, by consultation with the distribution network operator if necessary, that the equipment is connected only to a supply with a short-circuit power Ssc greater than or equal to 2819 kVA.

This equipment complies with IEC (EN) 61000-3-3.

⚠ CAUTION

After checking and confirming following conditions, start wiring work.

- Secure dedicated power source for the Air-to-Water heat pump. The wiring diagram (attached inside the control box of the unit) is presenting related information.
- Provide a circuit breaker switch between power source and the outdoor unit.
- Although it is very rare case, sometimes the screws used to fasten internal wires can be loosen due to the vibration while product transportation.
  Check these screws and make it sure if they are all fastened tightly. If not tightened, burn-out of the wire can be occurred.
- Check the specification of power source such as phase, voltage, frequency, etc.
- Confirm that electrical capacity is sufficient.
- Be sure that the starting voltage is maintained at more than 90 percent of the rated voltage marked on the name plate.
- Confirm that the cable thickness is as specified in the power sources specification. (Particularly note the relation between cable length and thickness.)
- Provide an ELB(electric leakage breaker) when the installation place is wet or moist.
- The following troubles would be caused by abnormal voltage supply such as sudden voltage increasing or voltage drop-down.
  - Chattering of a magnetic switch (frequent on and off operation)
  - Physical damage of parts where magnetic switch is contacted
  - Break of fuse
  - Malfunction of overload protection parts or related control algorithms.
  - Failure of compressor start up
- Ground wire to ground outdoor unit to prevent electrical shock.

Precautions when laying power wiring

Use round pressure terminals for connections to the power terminal block.

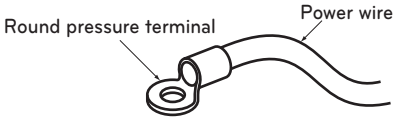

When none are available, follow the instructions below.

- Do not connect wiring of different thicknesses to the power terminal block. (Slack in the power wiring may cause abnormal heat.)
- When connecting wiring which is the same thickness, do as shown in the figure below.

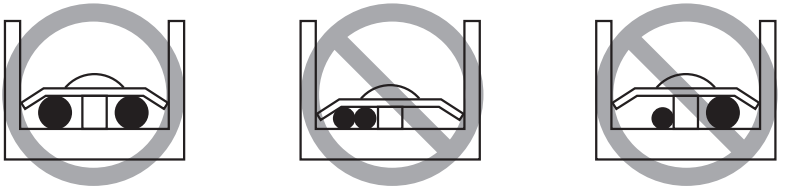

- For wiring, use the designated power wire and connect firmly, then secure to prevent outside pressure being exerted on the terminal block.
- Use an appropriate manual screwdriver instead of electric screwdriver for tightening the terminal screws. A screwdriver with a small head will strip the head and make proper tightening impossible.
- Over-tightening the terminal screws may break them.

⚠ WARNING

Make sure that the screws of the terminal are free from looseness.

Perform the electrical wiring work according to the electrical wiring connection.

- All wiring must comply with local requirements.
- Select a power source that is capable of supplying the current required by the unit.
- Use a recognized ELCB(Electric Leakage Circuit Breaker) between the power source and the unit. A disconnection device to adequately disconnect all supply lines must be fitted.
- Model of circuit breaker recommended by authorized personnel only
- The installation of a residual current device (RCD) having a rated residual operating current not exceeding 30 mA is advisable.

*Pipes and wires should be purchased separately for installation of the product.

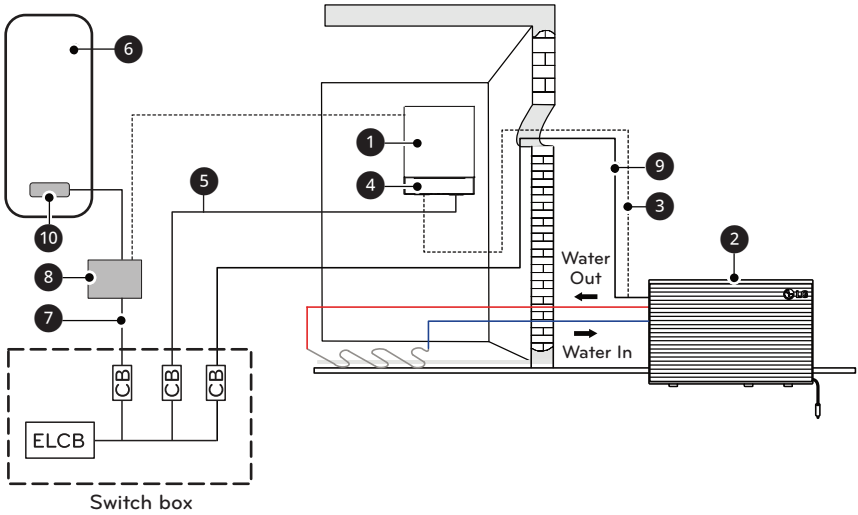

Description

No	Name	No	Name
1	Control Unit	7	Power supply DHW boost heater*
2	Outdoor unit	8	DHW tank kit (PHLTB)*
3	Communication cable	9	Power supply outdoor unit
4	HMI	10	DHW boost heater*
5	Power supply indoor unit	11	Connecting cable for DHW tank kit
6	DHW tank*	*Optional	

ELCB : Earth-leakage circuit breaker
CB : Circuit breaker

Specification of wires and circuit breakers

	Model name (Buyer)	Power supply	Max. current	Circuit breaker	Power cable (incl. Earth)	Cable spec
Power supply Outdoor Unit	HM163HF	380-415 V 50 Hz	16.1 A	16 A	2.5 mm² x 5C	H07RN-F
	HM143HF	380-415 V 50 Hz	16.1 A	16 A	2.5 mm² x 5C	H07RN-F
	HM123HF	380-415 V 50 Hz	16.1 A	16 A	2.5 mm² x 5C	H07RN-F
	HM093HFX	380-415 V 50 Hz	16.1 A	16 A	2.5 mm² x 5C	H07RN-F
	HM161HF	220-240 V 50 Hz	23 A	25 A	2.5 mm² x 3C	H07RN-F
	HM141HF	220-240 V 50 Hz	23 A	25 A	2.5 mm² x 3C	H07RN-F
	HM121HF	220-240 V 50 Hz	23 A	25 A	2.5 mm² x 3C	H07RN-F
	HM091HF	220-240 V 50 Hz	17 A	20 A	2.5 mm² x 3C	H07RN-F
	HM093HF	380-415 V 50 Hz	16.1 A	16 A	2.5 mm² x 5C	H07RN-F
	HM071HF	220-240 V 50 Hz	17 A	20 A	2.5 mm² x 3C	H07RN-F
	HM073HF	380-415 V 50 Hz	16.1 A	16 A	2.5 mm² x 5C	H07RN-F
	HM161HFD#	220-240 V 50 Hz	28A	32A	4.0 mm² x 3C	H07RN-F
	HM141HFD#	220-240 V 50 Hz	28A	32A	4.0 mm² x 3C	H07RN-F
	HM121HFD#	220-240 V 50 Hz	28A	32A	4.0 mm² x 3C	H07RN-F
	HM163HFD#	380-415 V 50 Hz	16.1A	16A	2.5 mm² x 5C	H07RN-F
	HM143HFD#	380-415 V 50 Hz	16.1A	16A	2.5 mm² x 5C	H07RN-F
	HM123HFD#	380-415 V 50 Hz	16.1A	16A	2.5 mm² x 5C	H07RN-F
	HM091HFD#	220-240 V 50 Hz	22A	25A	4.0 mm² x 3C	H07RN-F
	HM071HFD#	220-240 V 50 Hz	20A	25A	4.0 mm² x 3C	H07RN-F
	HM051HFD#	220-240 V 50 Hz	17A	20A	4.0 mm² x 3C	H07RN-F
	HM093HFD#	380-415 V 50 Hz	16.1A	16A	2.5 mm² x 5C	H07RN-F
	HM073HFD#	380-415 V 50 Hz	16.1A	16A	2.5 mm² x 5C	H07RN-F
Communication cable	-	-	-	-	0.75 mm² x 2C (shielded)	H07RN-F
Power supply Indoor unit	PHCS1	220-240 V 50 Hz	0.6 A	10 A	0.75 mm² x 3C	H07RN-F

※ Recommended diameter is feasible up to 20 m cable length. In any case, the diameter must be verified by professional electrician based on national rules and standards

⚠ CAUTION

The power cord should be complied with IEC 60245 or HD 22.4 S4 (This equipment shall be provided with a cord set complying with the national regulation.)

- Power supply outdoor unit

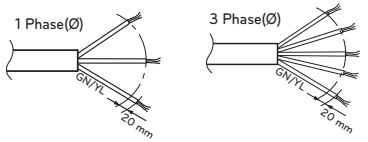

- Power supply indoor unit

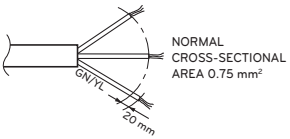

- Communication cable

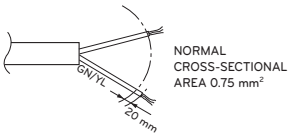

- Power supply Backup heater and Boost heater (optional)

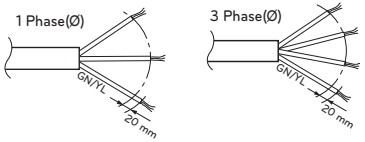

Electrical connections at outdoor unit

1 Disassemble Side panel and cover of control box from the outdoor unit

UB60 Series

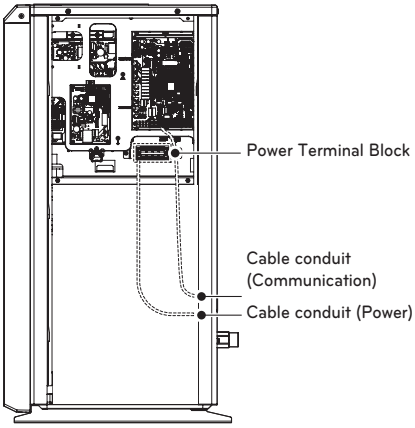

UB40 Series

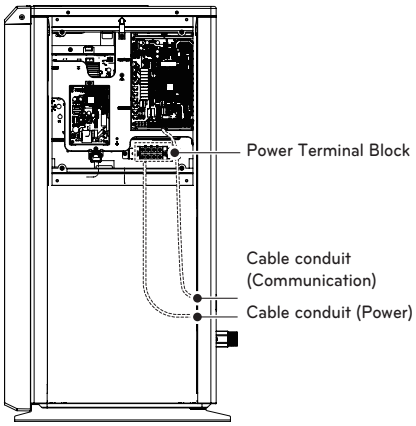

2 Connect power cable to main Power terminal
The earth cable is connected to the Control box case where earth symbol is ⏚ marked.

3 Use cable clamps (or cord clamps) to prevent unintended move of power cable.

4 Reassemble Side panel and cover to the outdoor unit by fastening screws.

Failure to do these instruction can result in fire, electric shock or death.
- Make sure the power cable do not touch to copper tube.
- Make sure to fix [cord clamp] firmly to sustain the connection of terminal.

※ It can be different by model.

1 Disassemble Side panel and cover of control box from the outdoor unit

UA41, UB41 Series

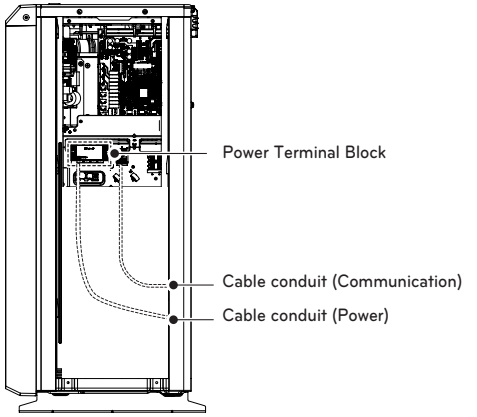

2 Connect power cable to main Power terminal
The earth cable is connected to the Control box case where earth symbol is ⏚ marked.

3 Use cable clamps (or cord clamps) to prevent unintended move of power cable.

4 Reassemble Side panel and cover to the outdoor unit by fastening screws.

Failure to do these instruction can result in fire, electric shock or death.
- Make sure the power cable do not touch to copper tube.
- Make sure to fix [cord clamp] firmly to sustain the connection of terminal.

Electrical connections at indoor unit

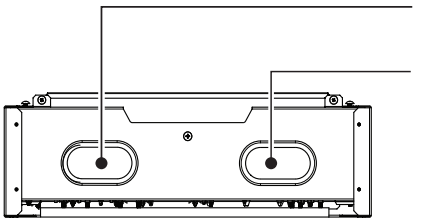

Hole A : For DC line (wire which is connected to the PCB of the control box)

Hole B : For AC line (wire which is connected to the terminal block of the control box)

Terminal Block Information

Symbols used below pictures are as follows :

- L, L1, L2 : Live (230 V AC)
- N : Neutral (230 V AC)
- BR : Brown, WH : White, BL : Blue, BK : Black

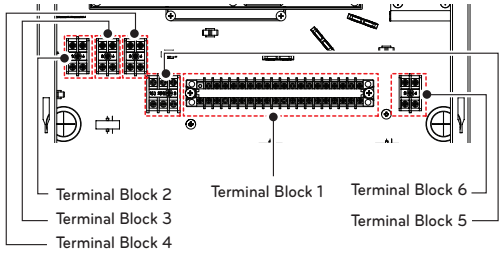

Terminal Block 1

1	2	3	4	5	6	7	8	9	10	11	12	13	14	15	16	17	18	19	20
	L	N	C	H	D	L	L1	N	L	N	L	N	L	N	L	N	L	L1	N
	THERMOSTAT (Default 230V AC)					2WAY VALVE			WATER PUMP (Recirculation)		WATER PUMP (Solar)		WATER TANK HEATER		MIX PUMP		MIX VALVE		

Terminal Block 2

21	22
L	N
CN_EXT	

Terminal Block 3

23	24
A	B
3" PARTY CONTROLLER (5V DC)	

Terminal Block 4

25	26
A	B
OUTDOOR UNIT	

Terminal Block 5

27	28	29
L	L1	N
3WAY VALVE (WATER TANK)		

Terminal Block 6

30	31
L	N
POWER SUPPLY 1Ø, 220-240 V, 50Hz	

Communication cable

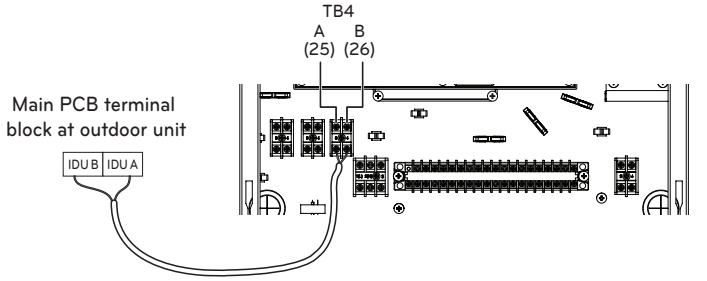

Power supply indoor unit

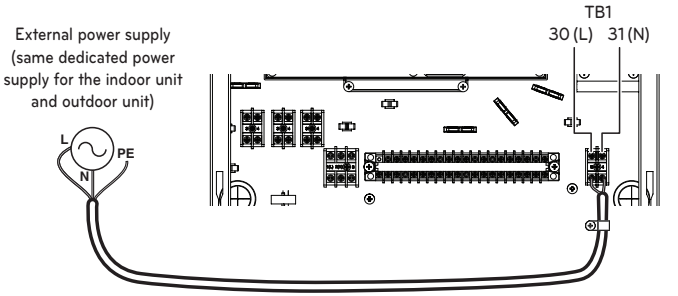

⚠ CAUTION

You should separate the communication wiring, in case of communication wiring length is over 40 m.

※ Maximum wire length: 50 m.

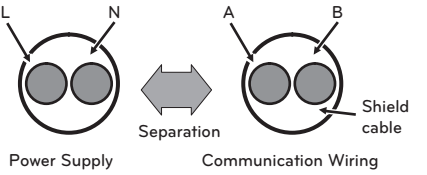

WATER PIPING

Procedures about water piping and electric wiring at the indoor unit are described in this chapter.

Water piping and water circuit connection, water charging, pipe insulations will be shown for water piping procedures. For wiring, terminal block connection, connecting with the outdoor unit, electric heater wiring will be introduced.

Accessories connection, such as sanitary water tank, thermostat, 3way or 2way valves, etc will be dealt in separated chapter.

Water Piping and Water Circuit Connection

⚠ CAUTION

General Considerations

Followings are should be considered before beginning water circuit connection.

- Service space should be secured.
- Water pipes and connections should be cleaned using water.
- Space for installing external water pump should be provided if internal water pump capacity is not enough for installation field.
- Never connect electric power while proceeding water charging.

Definition of terms are as follow :

- Water piping : Installing pipes where water is flowing inside the pipe.
- Water circuit connecting : Making connection between the product and water pipes or between pipes and pipes. Connecting valves or elbows are, for example, in this category.

All connections should be complied with presented diagram.

While installing water pipes, followings should be considered :

- While inserting or putting water pipes, close the end of the pipe with pipe cap to avoid dust entering.
- When cutting or welding the pipe, always be careful that inner section of the pipe should not be defective. For example, no weldments or no burrs are found inside the pipe.
- Drain piping should be provided in case of water discharge by operation of the safety valve, drain from condensate, and snow or rain. This situation can be happened when the internal pressure is over 3.0 bar and water inside the indoor unit will be discharged to drain hose.
- In a cold climate region, water drainage must be frost-proof.

While connecting water pipes, followings should be considered.

- Pipe fittings (e.g. L-shape elbow, T-shape tee, diameter reducer, etc) should be tightened strongly to be free from water leakage.
- Connected sections should be leakage-proof treatment by applying teflon tape, rubber bushing, sealant solution, etc.
- Appropriate tools and tooling methods should be applied to prevent mechanical breakage of the connections.
- Drain hose should be connected with drain piping.
- Maximum allowable Torque at the water piping connection is 50 N·m

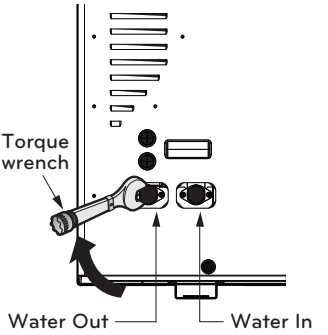

⚠ WARNING

Water condensation on the floor

While cooling operation using the underfloor heating, it is very important to keep leaving water temperature higher than 16 °C. Otherwise, dew condensation can be occurred on the floor.
If floor is in humid environment, do not set leaving water temperature below 18 °C.

Water condensation on the radiator

While cooling operation, cold water may not flow to the radiator. If cold water enters to the radiator, dew generation on the surface of the radiator can be occurred.

Drainage treatment

While cooling operation, condensed dew can drop down to the bottom of the indoor unit. In this case, prepare drainage treatment (for example, vessel to contain condensed dew) to avoid water drop. Additional drain pan accessory should be installed to prevent dew to be formed.

How to install downward water piping

It is possible to change the piping direction from backside to downward using the downward piping kit. It should be purchased and installed separately.

[HM071HF UB40 / HM073HF UB40]
[HM091HF UB40 / HM093HF UB40]

1. Remove 2 existing rubber pipes

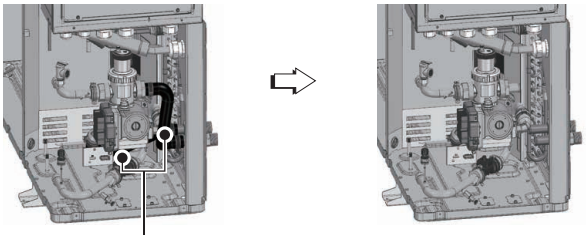

2. Change direction of 2 brass connectors

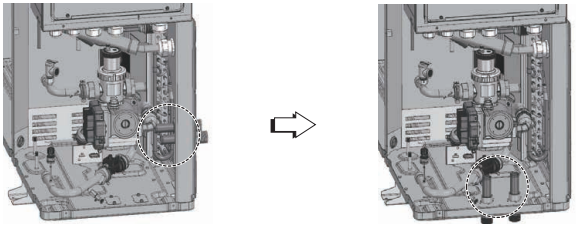

3. Install the delivered rubber pipes kit

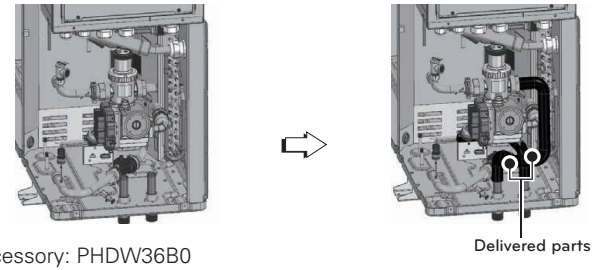

*Required accessory: PHDW36B0

⚠ WARNING

Do not forget to use delivered clamps to fix rubber pipes, Otherwise water leakage may occur.

NOTE

When the work is completed, move 2 brackets from the base pan to the rear panel and screw them.

[HM121HF UB60 / HM123HF UB60]
[HM141HF UB60 / HM143HF UB60]
[HM161HF UB60 / HM163HF UB60 / HM093HFX UB60]

1. Remove 2 existing rubber pipes

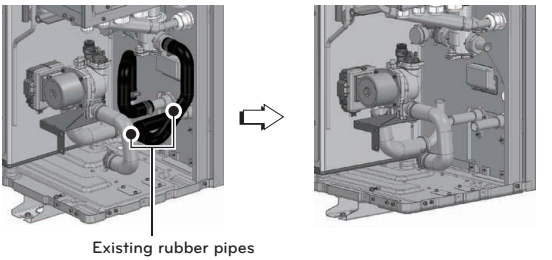

2. Change direction of 2 brass connectors

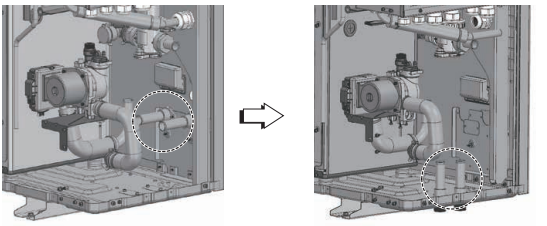

3. Install the delivered rubber pipes kit

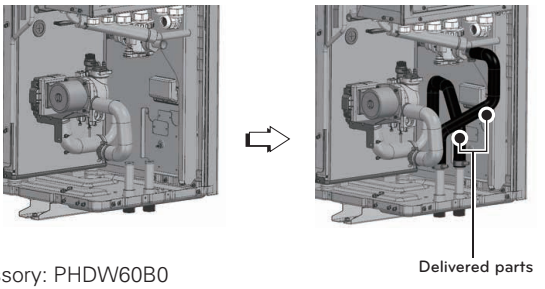

*Required accessory: PHDW60B0

⚠ WARNING

Do not forget to use delivered clamps to fix rubber pipes, Otherwise water leakage may occur.

NOTE

When the work is completed, move 2 brackets from the base pan to the rear panel and screw them.

Water Charging

For water charging, please follow below procedures.

Step 1. Open all valves of whole water circuit. Supplied water should be charged not only inside the indoor unit, but also in the under floor water circuit, sanitary water tank circuit, FCU water circuit, and any other water circuits controlled by the product.

Step 2. Connect supply water into drain valve and fill valve.

Step 3. Start to supply water. While supplying water, following should be kept.
- Pressure of supplying water should be pre-adjust value approximately.
- For supplying water pressure, time to be taken from 0 bar to pre-adjust value should be more than 1 minute. Sudden water supply can yield water drain through safety valve.
- Fully open the cap of air vent to assure air purging. If air is exist inside the water circuit, then performance degrade, noise at the water pipe, mechanical damage at the surface of electric heater coil.
- Open both the air vent in the water pipe and the air vent in the pump.

Step 4. Stop water supplying when the pressure gauge located in front of the control panel indicates pre-adjust value. Stop water supplying when the pressure located in remote control indicates pre-adjust value.

Step 5. Close drain valve and fill valve. Then wait for 20~30 seconds to observe water pressure being stabilized.

Step 6. If following conditions are satisfactory, then check the pipe insulation. Otherwise, go to step 3.
- Pressure gauge indicates pre-adjust value. Note that sometimes pressure in decreased after step 5 due to water charging inside expansion vessel.
- No air purging sound is heard or no water drop are popping out from air vent.

⚠ CAUTION

Keep the air vent of the water pipe open and keep the air vent of the pump closed.
Otherwise, the pump may make noise. Close all air vents once water is spilled from the vents.

Pipe Insulation

Purpose of water pipe insulation is :

- To prevent heat loss to external environment
- To prevent dew generation on the surface of the pipe in cooling operation
- Minimum insulation thickness recommendations ensure correct operation of the product, but local regulations may vary and must be followed.
- If Cooling function is used, the type of insulation must be suited for cold water and all joints must be sealed tightly to prevent that the insulation becomes wet from the inside.

Water Piping length (m)	Minimum insulation Thickness(mm)
<20	20
20~30	30
30~40	40
40~50	50

* λ = 0.04 W/mk (Thermal conductivity of pipe insulation)

Water pump Capacity

The water pump is variable type which is capable to change flow rate, so it may be required to change default water pump capacity in case of noise by water flow. In most case, however, it is strongly recommended to set capacity as Maximum.

Pressure Drop

NOTE

When installing the product, install additional pump in consideration of the pressure loss and pump performance. If flow rate is low, overloading of product can occur

For GRUNDFOS Water Pump

Capacity [kW]	Rated flow-rate [LPM(m^3/h)]	Pump Head [m] (At rated flow rate)	Product pressure drop [m] (Plate heat exchanger)	Serviceable Head [m]
5	15.8 (0.9)	7.5	0.2	7.3
7	20.1 (1.2)	7.3	0.3	7.0
9*	25.9 (1.6)	6.1	0.4	5.7
9**	25.9 (1.6)	10.0	0.4	9.6
12	34.5 (2.1)	9.8	0.8	9.0
14	40.3 (2.4)	9.3	1.1	8.2
16	46.0 (2.8)	8.3	1.4	6.9

For OH SUNG Water Pump

Capacity [kW]	Rated flow-rate [LPM(m^3/h)]	Pump Head [m] (At rated flow rate)	Product pressure drop [m] (Plate heat exchanger)	Serviceable Head [m]
5	15.8 (0.9)	10.9	0.2	10.7
7	20.1 (1.2)	10.7	0.3	10.4
9	25.9 (1.6)	10.3	0.4	9.9
12	34.5 (2.1)	9.7	0.8	8.9
14	40.3 (2.4)	9.1	1.1	8.0
16	46.0 (2.8)	8.5	1.4	7.1

*: UB40
**: UB60

Performance curve

GRUNDFOS Water Pump : UPM3K GEO 20 – 75 CHBL

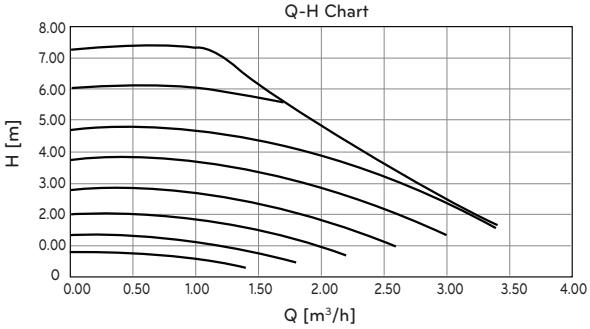

GRUNDFOS Water Pump : UPM4K GEO 20 – 75 CHBL

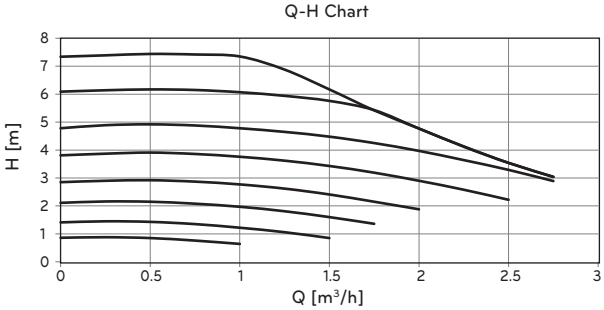

GRUNDFOS Water Pump : UPML GEO 20 – 105 CHBL

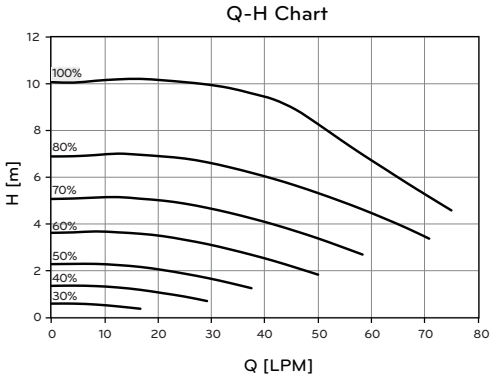

OH SUNG Water Pump : ODM-061P

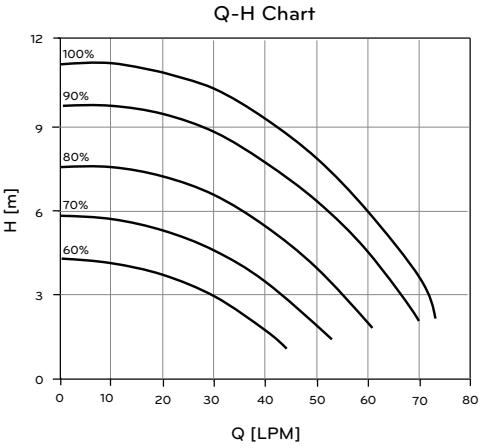

Performance test based on standard ISO 9906 with pre-pressure 2.0 bar and liquid temperature 20 °C.

⚠ WARNING

- If pressure drop is higher than what the pump can cover, the flow rate will drop and low-flow error (CH14) will occur.

Water Quality

Water quality should be complied with EN 98/83 EC Directives.
Detailed water quality condition can be found in EN 98/83 EC Directives.

⚠ CAUTION

- If the product is installed at existing hydraulic water loop, it is important to clean hydraulic pipes to remove sludge and scale.
- Installing sludge strainer in the water loop is very important to prevent performance degrade.
- Chemical treatment to prevent rust should be performed by installer.
- It is strongly recommended to install an additional filter on the heating water circuit. Especially to remove metallic particles from the heating piping, it is advised to use a magnetic or cyclone filter, which can remove small particles. Small particles may damage the unit and will NOT be removed by the standard filter of the heat pump system.

Frost protection by antifreeze

In areas of the country where entering water temperatures drop below 0 °C, the water pipe must be protected by using an approved antifreeze solution. Consult your Air-to-Water heat pump unit supplier for locally approved solutions in your area. Calculate the approximate volume of water in the system. (Except the heat pumps internal circuit unit.) And add six liters to this total volume to allow for the water contained in heat pump itself.

Antifreeze type	Antifreeze mixing ratio					
	0 °C	-5 °C	-10 °C	-15 °C	-20 °C	-25 °C
Ethylene glycol	0 %	12 %	20 %	30 %	-	-
Propylene glycol	0 %	17 %	25 %	33 %	-	-
Methanol	0 %	6 %	12 %	16 %	24 %	30 %

If you use frost protection function, change DIP switch setting and input the temperature condition in Installation mode of remote controller. Refer to ‘CONFIGURATION > DIP Switch Setting > DIP Switch Information > Option Switch 3’ and ‘INSTALLER SETTING > Antifreezing Temperature’.

⚠ CAUTION

- Use only one of the above antifreeze.
- If a antifreeze is used, pressure drop and capability degradation of the system can be occurred.
- If one of antifreezes is used, corrosion can be occurred. So please add corrosion inhibitor.
- Please check the concentration of the antifreeze periodically to keep same concentration.
- When the antifreeze is used (for installation or operation), take care to ensure that antifreeze must not be touched.
- Ensure to respect all laws and norms of your country about Anti-freeze usage.

Frost protection by antifreeze valve

About antifreeze valve

This is a valve to prevent freeze in winter. When no antifreeze is added to the water, you can use antifreeze valves at all lowest points of the field piping to drain the water from the system before it can freeze

To install antifreeze valve

To protect the field piping against freezing, install the following parts:

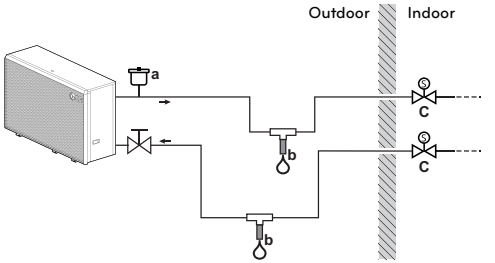

a Automatic air intake
b Antifreeze valve (Optional – field supply)
c Normally closed valves (recommended – field supply)

Part	Description
a	An automatic air intake (for air supply) should be installed at the highest point. For example, an automatic air purge.
b	Protection for the field piping. The antifreeze valve must be installed: • Vertically to allow water to flow out properly and free from obstructions. • At all lowest points of the field piping. • In the coldest part and away from heat sources.
c	Isolation of water inside the house when there is a power interruption. Normally closed valves (located indoors near the piping entry/exit points) can prevent that all water from indoor piping is drained when the antifreeze valve open. • When there is a power interruption: The normally closed valves close and isolate the water inside the house. If the antifreeze valve open, only the water outside the house is drained. • In other circumstances (example: when there is a pump failure): The normally closed valves remain open. If the antifreeze valve open, the water from inside the house is also drained.

NOTE

- Do not make any trap connections. If the shape of the connection pipe has the potential to create a trap effect, part of the pipe will not be able to drain and frost protection will no longer be guaranteed.
- Leave at least 15 cm clearance from the ground to prevent ice from blocking the water exit.
- Keep a distance of at least 10 cm between the antifreeze valves.
- The valve must be free of insulation for the system to work properly.
- When antifreeze valves are installed, do NOT select a minimum cooling setpoint lower than 7 °C. If lower, antifreeze valves can open during cooling operation.
- When installed outdoors, the antifreeze valve must be protected from rain, snow and direct sunlight.

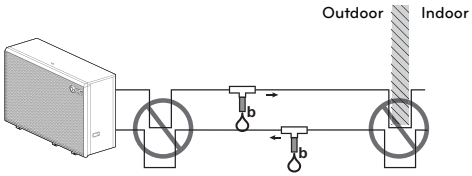

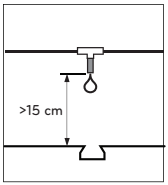

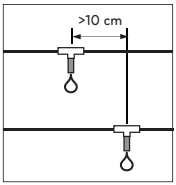

Water Volume and Expansion Vessel Pressure

Inside expansion vessel is included which is 8 liter capacity with 1 bar pre-pressure. That means, according to the volume-pressure graph, total water volume of 230 liter is supported as default. If total water volume is changed because of installation condition, the pre-pressure should be adjusted to secure proper operation.

If	Minimum water volume
The system contains a backup heater	20 L
The system does NOT contain a backup heater	80 L

* The internal water volume of the outdoor unit is NOT included

- Pre-pressure is adjusted by the total water volume. If the indoor is located at the highest position of the water circuit, adjustment is not required.
- To adjust pre-pressure, use nitrogen gas by certificated installer.

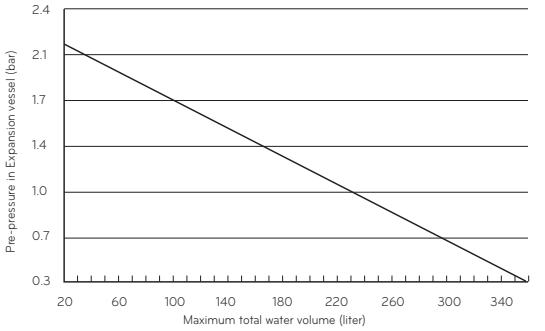

Adjusting pre-pressure of expansion vessel is as following :

Step 1. Refer "Volume-Height" table.
If installation scene is belong to Case A, go to Step 2.
Otherwise, if it is Case B, do nothing. (pre-pressure adjustment is not required.)
Otherwise, if it is Case C, go to Step 3.

Step 2. Adjust pre-pressure by following equation.
Pre-pressure [bar] = (0.1 x H + 0.3) [bar]
where H : difference between unit and the highest water pipe
0.3 : minimum water pressure to secure product operation

Step 3. Volume of expansion vessel is less than installation scene. Please install additional expansion vessel at the external water circuit.

Volume-Height Table

	V < 230 liter	V ≥ 230 liter
H < 7 m	Case B	Case A
H ≥ 7 m	Case A	Case C

H : Difference between unit and the highest water pipe
V : total water volume of installation scene

ACCESSORIES INSTALLATION

This product can interface to various accessories to extend its functionality and to improve user convenience. In this chapter, specifications about supported 3rd party accessories and how to connect to this product is introduced.

It is noted that this chapter only deal with 3rd party accessories. For accessories supported by LG Electronics, please refer to installation manual of each accessories.

Accessories supported by LG Electronics

Item	Purpose	Model
DHW Heater Kit	To operate with DHW tank	PHLTB
Remote temperature sensor	To control by air temperature	PQRSTA0
Simple dry contact	To receive on & off external signal	PDRYCB000
Thermostat Dry contact	Dry Contact For Thermostat	PDRYCB320
Solar Thermal Kit	To operate with solar heating system	PHLLA
Buffer Tank	To generate and store hot water	SB006SAAN0: 60L SB010SAAN0: 100L
DHW Tank (Single Coil)	To generate and store hot water	SD020SASN0: 200L SD025SASN0: 250L SD030SASN0: 300L
DHW Tank (Double Coil)	To generate and store hot water	SD030SSSN0
DHW tank (single coil) with buffer	To generate and store hot water	ST030SASN0
Thermistor for Water Tank (Buffer Tank, DHW Tank)	To control hot water temperature of DHW tank	PHRSTA0
Meter Interface*	To measure production / consumption power	PENKTH000
Backup heater	To supplement insufficient capacity	HA031M E2 / HA061M E2 / HA063M E2

NOTE

EITHER the Meter interface OR a third-party Modbus-controller can be connected!

Item	Purpose	Model
Wall-mounted outdoor air temp. sensor	The sensor is highly recommended when using AUTO mode - especially when outdoor unit sensor is exposed to direct sunlight.	PHATS0
Wi-Fi Modem	To enable remote system operation from smartphone	PWFMDD200
Wi-Fi Extension Cable	To connect with Wi-Fi modem to the USB cable	PWYREW000
Thermistor for 2nd Circuit	To interlock with 2nd circuit operation and control temperature of mixing circuit or to interlock with 3rd party electric backup heater and control its outlet temperature.	PRSTAT5K10
Extension wire	To extend the Remote controller wire by 10 m.	PZCWRC1
Wired remote controller	To control unit with 2 remote controllers	PREMTW200
2-Remo Control Wire	The wire for 2 remo control	PZCWRC2
3 way valve	To divert water flow between space heating and DHW heating	OSHA-3 V
Thermostatic mixing valve	To blend hot water with cold water for ensuring constant, safe shower and bath outlet temp.	OSHA-MV OSHA-MV1

⚠ CAUTION

- Install the drain pan when cooling.
- If not installed, water may form.
- Please refer to separate installation manual when installing drain pan.

Accessories supported by 3rd party Companies

Item	Purpose	Specification
Solar Heating System	To generate auxiliary heating energy for water tank	• Solar collector • Solar pump • Solar Thermal Sensor : PT1000
Thermostat	To control by room air temperature	Heating-Only type (230 V AC) Cooling/Heating type (230 V AC with Mode selection switch)
Mix Kit	To use 2nd Circuit	• Mixing valve • Mix pump
3rd Party Boiler	To use auxiliary boiler.	
3rd Party Controller*	To connect external controller using modbus protocol	Modbus RTU, 9600 bps, Stopbit 1, Parity none
3way valve and actuator	(A) : To control water flow for hot water heating or floor heating / To control water flow when installing 3rd party boiler (B) : To control close/open mode of solar circuit	3 wire, SPDT (Single Pole Double Throw) type, 230 V AC
2way valve and actuator	To block underfloor heating coil from cooling water	2 wire,NO(Normal Open) or NC(Normal Closed) type, 230 V AC
External Pump	To control the water flow at the rear of the buffer tank	
Smart Grid	To control operation mode depending on input signal from provider	2 x 230VAC
3rd Party ESS*	To control the operation mode according to the energy storage state	Modbus RTU
Antifreeze valve	To protect the pipes against freezing	
DHW Recirculation Pump	To control the water flow of DHW recirculation pump	

NOTE

EITHER the Meter interface OR a third-party Modbus-controller can be connected!

Before Installation

⚠ WARNING

Followings should be kept before installation

- Main power must be turned off during installing accessories.
- 3rd party accessories should be comply with supported specification.
- Proper tools should be chosen for installation.
- Never do installation with wet hands.

Thermostat

Thermostat is generally used to control the product by air temperature. When thermostat is connected to the product, the product operation is controlled by the thermostat.

Installation condition

⚠ CAUTION

- USE 220-240 V~ Thermostat
- Some electro-mechanical type thermostat has internal delay time to protect compressor. In that case, mode change can takes time more than user's expectation. Please read thermostat manual carefully if the unit does not response quickly.
- Setting temperature range by thermostat can be different with that of the unit. The heating or cooling set temperature should be chosen within the setting temperature range of the unit.
- It is highly recommended that the thermostat should be installed where space heating is mainly applied.

Following location should be avoid to secure proper operation :

- Height from floor is approximately 1.5 m.
- Thermostat can not be located where the area may be hidden when door is open.
- Thermostat can not be located where external thermal influence may be applied. (such as above heating radiator or open window)

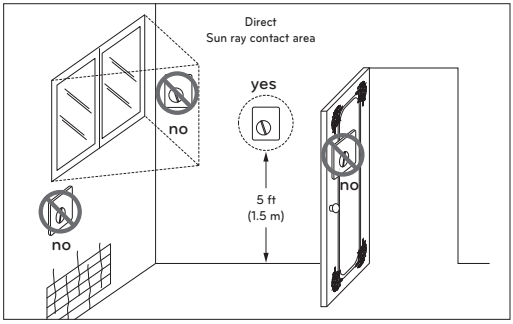

Thermostat

General Information

The Heat Pump supports following thermostats.

Type	Power	Operating Mode	Supported
Mechanical (1)	230 V~	Heating Only (3)	Yes
		Heating / Cooling (4)	
		Heating / Cooling / DHW Heating (5)	
Electrical (2)	230 V~	Heating Only (3)	Yes
		Heating / Cooling (4)	
		Heating / Cooling / DHW Heating (5)	

(1) There is no electric circuit inside the thermostat and electric power supply to the thermostat is not required.

(2) Electric circuit such as display, LED, buzzer, etc is included in the thermostat and electric power supply is required.

(3) Thermostat generates "Heating ON or Heating OFF" signal according to user"s heating target temperature.

(4) Thermostat generates both "Heating ON or Heating OFF" and "Cooling ON or Cooling OFF" signal according to user"s heating and cooling target temperature.

(5) Thermostat generates "Heating ON or Heating OFF", "Cooling ON or Cooling OFF", "DHW Heating ON or DHW Heating OFF" signal according to user's heating, cooling and DHW heating target temperature.

⚠ CAUTION

Choosing heating / cooling thermostat

- Heating / cooling thermostat must have "Mode Selection" feature to distinguish operation mode.
- Heating / cooling thermostat must be able to assign heating target temperature and cooling target temperature differently.
- If above conditions are not kept, the unit can not operation properly.
- Heating / cooling thermostat must send cooling or heating signal immediately when temperature condition is satisfied. No delay time while sending cooling or heating signal is permitted.

How to wire Heating / Cooling / DHW Heating thermostat

Follow below procedures Step 1 ~ Step 3.

Step 1. Uncover front cover of the unit and open the control box.

Step 2. Identify the power specification of the thermostat. If it is 220-240 V~, go to Step 3.

Step 3. Find terminal block and connect wire as below.

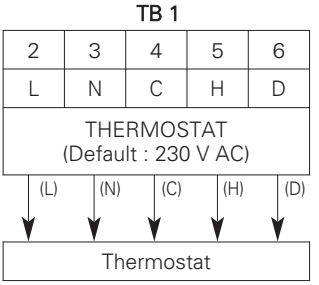

(L) : Live signal from PCB to thermostat
(N) : Neutral signal from PCB to thermostat
(C) : Cooling signal from thermostat to PCB
(H) : Heating signal from thermostat to PCB
(D) : DHW Heating signal from thermostat to PCB

⚠ WARNING

Mechanical type thermostat.
Do not connect wire (N) as mechanical type thermostat does not require electric power supply.

⚠ CAUTION

Do not connect external electric loads.
Wire (L) and (N) should be used only for operation electric type thermostat.
Never connect external electric loads such as valves, fan coil units, etc.
If connected, Main PCB (Heater) can be seriously damaged.

Final check

DIP switch setting :

- Set DIP switch No. 8 to 'ON'. Otherwise, the unit can not recognize the thermostat.

Remote Controller :

- 'Thermostat' text is displayed on the remote controller.
- Only the water temperature setting is available and the other button input is prohibited.
- In case of Heating / Cooling / DHW Heating thermostat, select 'Heat&Cool / DHW' as the Thermostat Control Type in the remote controller installer settings.
- The product operates according to Thermo On / Off conditions of the thermostat and remote controller.

Thermo On / Off Condition		Product
Thermostat	Remote Controller	
Thermo Off	Thermo Off	Thermo Off
Thermo Off	Thermo On	Thermo Off
Thermo On	Thermo Off	Thermo Off
Thermo On	Thermo On	Thermo On

2nd Circuit

The 2nd circuit is a function that can separately control the circuit1 requiring high temperature and the circuit 2 requiring medium temperature, you need to prepare a separate Mix Kit.
The mix kit must be installed in the circuit 2.

[Install Guide Mixing circuit Heating]

Circuit 2 / Circuit 1	Floor (35°C)	Convector (FCU, 45 °C)	Radiator (45 °C)	Radiator (55 °C)
Floor (35 °C)	×	×	×	×
Convector (FCU, 45 °C)	○	×	×	×
Radiator (45 °C)	○	○	×	×
Radiator (55 °C)	○	○	○	×

[Install Guide Mixing circuit Cooling]

Circuit 2 / Circuit 1	Floor (18 °C)	Convector (FCU, 5 °C)
Floor (18 °C)	×	×
Convector (FCU, 5 °C)	○	×

※ Heating circuits that are not designed for carrying cooling water must be blocked by the 2-way-valve.

NOTE

Circuit 1 = Direct circuit : Zone where the water temperature is highest when heating

Circuit 2 = Mixing circuit : The other zone

How to Wire Mixing Kit

Follow below procedures Step 1 ~ Step 3.

Step 1. Uncover front cover of the unit.

Step 2. Find terminal block and connect wire as below

TB 1

16	17	18	19	20
L	N	L	L1	N
MIX PUMP		MIXING VALVE		

(L) (N) (L) (L1) (N1)

MIX PUMP	MIXING VALVE

(L) : Live signal from PCB to mix pump

(N) : Neutral signal from PCB to mix pump

(L) : Live signal (for Normal* Closed type) from PCB to mixing valve

(L1) : Live signal (for Normal Open type) from PCB to mixing valve

(N1) : Neutral signal from PCB to mixing valve

*Closed = NOT Mixed

Step3. Insert the temperature sensor to 'CN_MIX_OUT' (Brown) of the main PCB as shown below. The sensor should be mounted correctly to discharge pipe of mix pump as shown below.

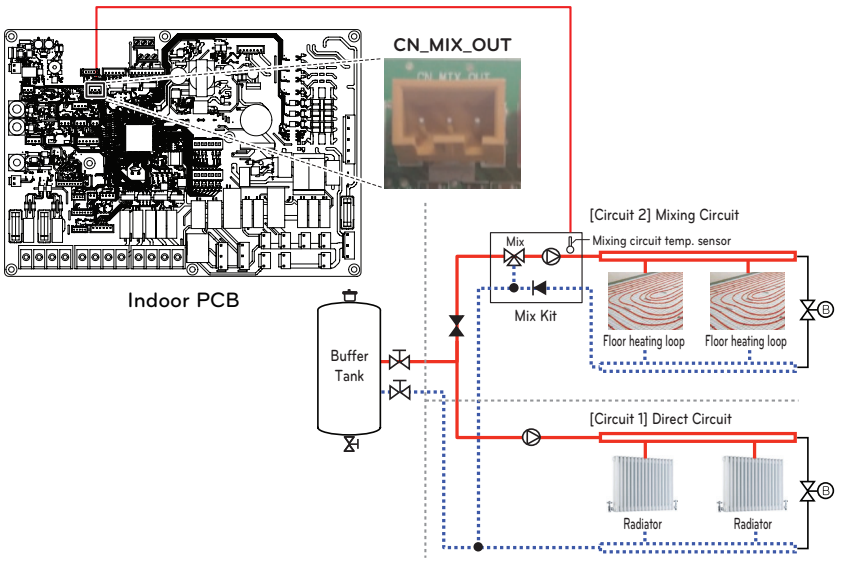

NOTE

- The location of the external pump may vary depending on the installer settings.
- Temperature sensor specification:
  LG-accessory PRSTAT5K10 at 25 °C : 5 kΩ
  Minimum operating temperature range : -30 °C~100 °C
- When connecting a pump of 1.05 A or higher, its output must be used as a signal line only.

[Thermistor for Mixing circuit]



Sensor



Sensor Holder



Sensor Connector

Follow below procedures step 1 ~ step 4.

Step 1. Install sensor connector to discharge pipe of mix pump.
(Welding must be performed to connect the sensor connector to the pipe)

Step 2. Check if the power of the unit is turned off.

Step 3. Fasten the sensor connector to the sensor holder as shown in the figure below.

Step 4. Insert harness into PCB(CN_MIX_OUT) fully and fix the thermal sensor into tube connector as shown below.

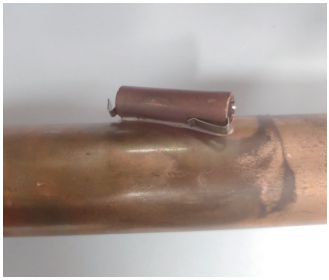

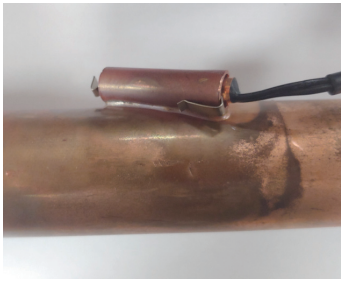

3rd Party Backup heater

The product can be used by connecting an Auxiliary Backup heater. You can control the Backup heater automatically and manually by comparing the water out temperature of Backup heater and the set temperature.

How to install 3rd party Backup heater

Follow below procedures Step 1 ~ 4.

Step 1. Find the middle link harness and the temperature sensor.

Step 2. Insert connector(Brown) of the temperature sensor to connector(White) of the middle link harness as shown below.

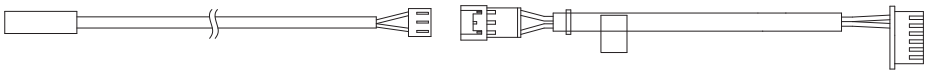

Temperature sensor Middle Link Harness

Step 3. Insert connector(Black) of middle link harness to 'CN_TH3' in the Main PCB connector(Black) as shown below. The sensor should be mounted correctly to outlet pipe of backup heater as shown below.

Step 4. Connect Power cable to the terminal block 'TB_HEATER_CONTACT' using the Magnetic Contactor.

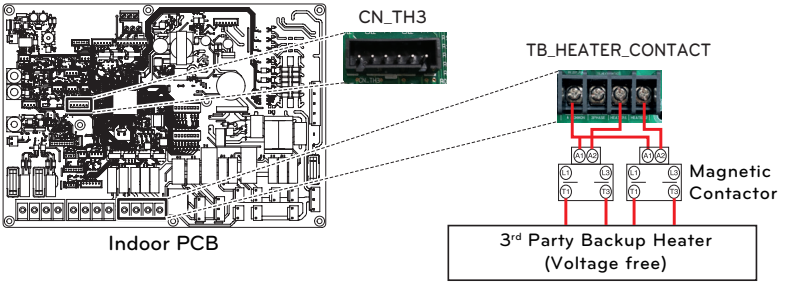

Item	Phase	Function	
LG backup heater Accessory	1Ø	2 step	1 step (Heater 1 or Heater 2) 2 step (Heater 1 and Heater 2)
	3Ø	1 step	1step (Heater 1)
3rd party Backup heater	1Ø	2 step	1 step (Heater 1 or Heater 2) 2 step (Heater 1 and Heater 2)
	3Ø	2 step	1 step (Heater 1 or Heater 2) 2 step (Heater 1 and Heater 2)

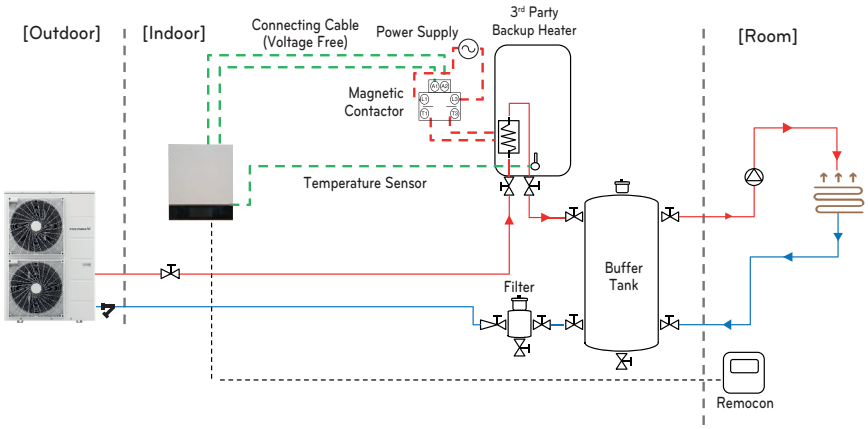

External Pump	Thermostatic Valve	Strainer
Safety Valve	2Way Valve (Manual)	Floor Heating
2Way Valve (Signal)	Air vent	

CAUTION

- Accessory Heater sensor must be connected for use.
- Install the accessory heater so that it can sense the water outlet temperature of the backup heater. If not, the product may malfunction.
- When connecting to the heater, please refer to the control method below and connect with safety.

[Thermistor for 3rd party Backup heater]



Sensor



Sensor Holder



Sensor Connector



Middle link harness

Follow below procedures Step 1 ~ 4.

Step 1. Install sensor connector to outlet pipe of backup heater.
(Welding must be performed to connect the sensor connector to the pipe.)

Step 2. Check if the power of the unit is turned off.

Step 3. Fasten the sensor connector to the sensor holder as shown in the figure below.

Step 4. Insert harness into PCB(CN_TH3) fully and fix the thermal sensor into tube connector as shown below.

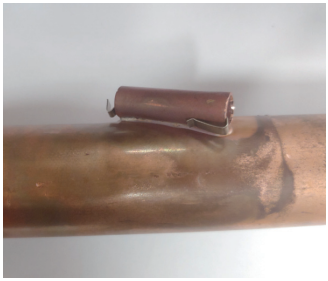

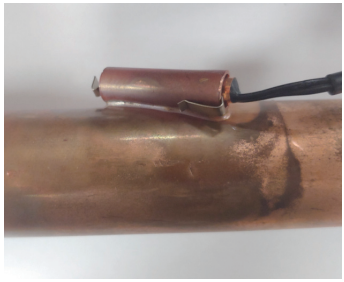

3rd Party Boiler

The product can be used by connecting an Auxiliary boiler. 3rd party boiler can be enabled/disabled by manually via remote controller or automatically itself by means of comparing the outside air temperature and the pre-set temperature. Only Bivalent-alternative operation is possible. While boiler is enabled, it must operate by its own controls.

How to wire 3rd party boiler

Follow below procedures step 1 ~ step 3.

Step 1. Check if the power of the unit is turned off.

Step 2. Disassemble front panels and Distinguish terminal block in Indoor PCB.

Step 3. Connect Power cable to terminal block (TB_BOILER) fully.

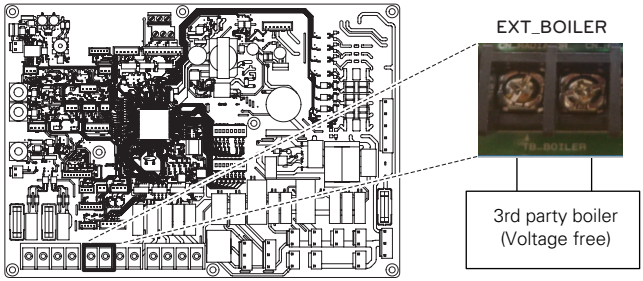

Indoor PCB

3rd Party Controller

The product can also be linked to 3rd party controller using Modbus RTU. Various datapoints and setting options are available through Modbus protocol. Contact your authorized dealer for more information.

How to wire 3rd party controller

Follow below procedures step 1 ~ step 4.

Step 1. Check if the power of the unit is turned off.

Step 2. Disassemble front panels and distinguish control box(Indoor) of the unit.

Step 3. Check if the harness(White) is inserted fully to the indoor unit PCB (CN_MODBUS).

Step 4. Connect the 3rd party controller to terminal block 3(23/24) completely.

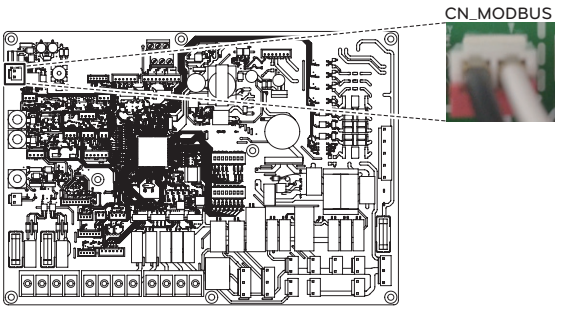

Indoor PCB

NOTE

- If CN_MODBUS port is used to interlink with LG metering module, a 3rd-party controller cannot be connected at the same time.

Meter Interface

This accessory (PENKTH000) can be used to connect 3rd-party wattmeter (max. 3) using pulse input or Modbus and one heatmeter using pulse input.

The consumed electric power and/or produced thermal energy is displayed on the remote controller.

How to install Meter Interface

[Parts of Meter interface]

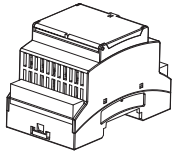

Meter interface body

Follow below procedures step 1 ~ step 4.

Step 1. Check if the power of the unit is turned off.

Step 2. Disassemble front panels and Distinguish control box(Indoor) of the unit.

Step 3. Check if the harness(White) is inserted fully to the indoor unit PCB (CN_MODBUS).

Step 4. Connect the external pump to terminal block 3(23/24).

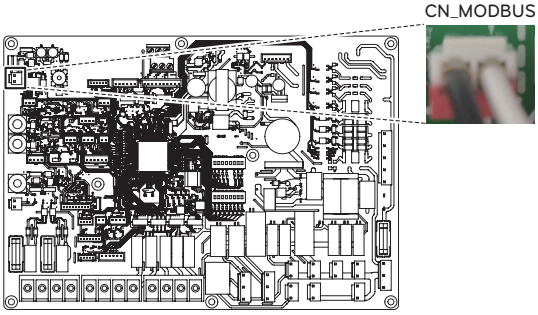

Indoor PCB

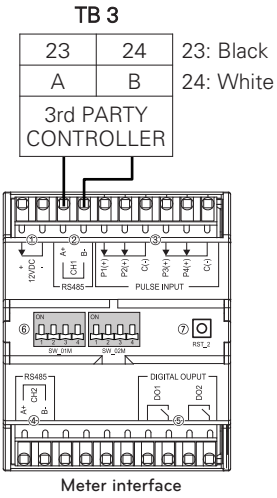

Meter interface

NOTE

- If CN_MODBUS port is used to interlink with 3rd-party controller, the metering module cannot be connected at the same time.
- Refer to manual of PENKTH000 for more information.

DHW Tank

To establish DHW circuit, 3way valve and DHW sensor (PHRSTA0) or DHW kit (PHLTB) is required.

Installation condition

Installing DHW tank following considerations :

- DHW tank should be located at the flat place.
- Water quality should be complied with EN 98/83 EC directives.
- As this water tank is sanitary water tank (indirect heat exchange), do not use anti water-freezing treatment like ethylene grycol.
- It is highly recommend to wash out inside of the DHW tank after installation. It ensures generating clean hot water.
- Near the DHW tank there should be water supply and water drain for easy access and maintenance.
- Set the maximum value of the temperature control device of DHW tank.

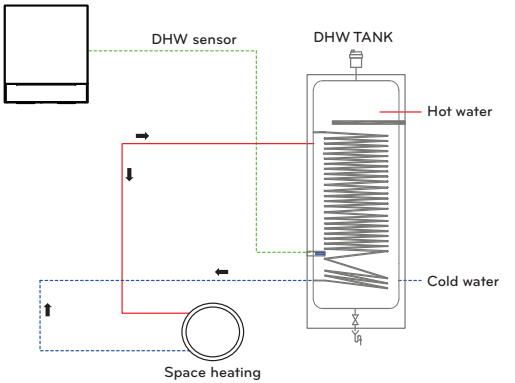

※ For detailed connection refer to manufacturer's manual of the DHW tank.

⚠ WARNING

The schematic does not include all necessary safety devices. For details refer to Hydronic schemes provides by local LG office.

General Information

Therma V™ supports following 3way valve.

Type	Power	Operating Mode	Supported
SPDT [1] 3-wire	230 V AC	Selecting Flow A[2] between Flow A and Flow B	Yes
		Selecting Flow B[3] between Flow A and Flow B	Yes

1) SPDT = Single Pole Double Throw. Three wires consist of Live1 (for selecting Flow A), Live 2 (for selecting Flow B), and Neutral (for common).

2) 'Flow A' means water flow from the unit to space heating circuit.

3) 'Flow B' means water flow from the unit to DHW tank.

Installing recirculation pump

A DHW recirculation pump can be connected to increase comfort, as warm water will immediately available when opening the tap.

- To limit the energy consumption, external time scheduler to determine when the recirculation pump should turn on and turn off is required.
- The operating duration time of the recirculation pump is calculated as follow :
  Duration time [minute] = k x V / R
  k : 1.2 ~ 1.5 is recommended. (If distance between pump and tank is far, then choose high number)
  V : Volume of DHW tank [liter]
  R : Water flow rate of pump [liter per minute], which is determined by pump performance curve.
- The pump operating start time should be prior to the DHW demand.

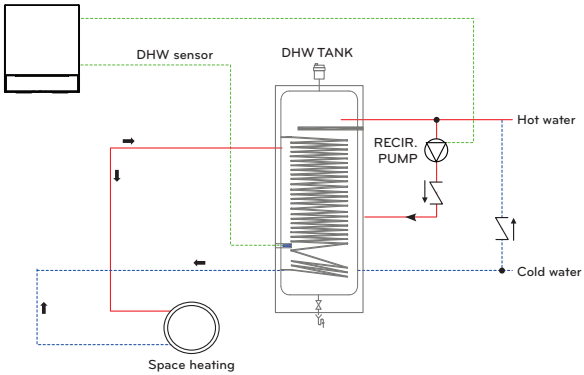

※ Water In / Water Out installation scene may vary depending on the model.

⚠ WARNING

The schematic does not include all necessary safety devices. For details refer to Hydronic schemes provides by local LG office.

How to wire recirculation pump

Follow below procedures step 1 ~ step 4.

Step 1. Check if the power of the unit is turned off.

Step 2. Disassemble front panels and distinguish control box(Indoor) of the unit.

Step 3. Check if the harness(Violet) is inserted fully to the indoor unit PCB (CN_PUMP_A15).

Step 4. Connect the DHW recirculation pump to terminal block 1(10/11).

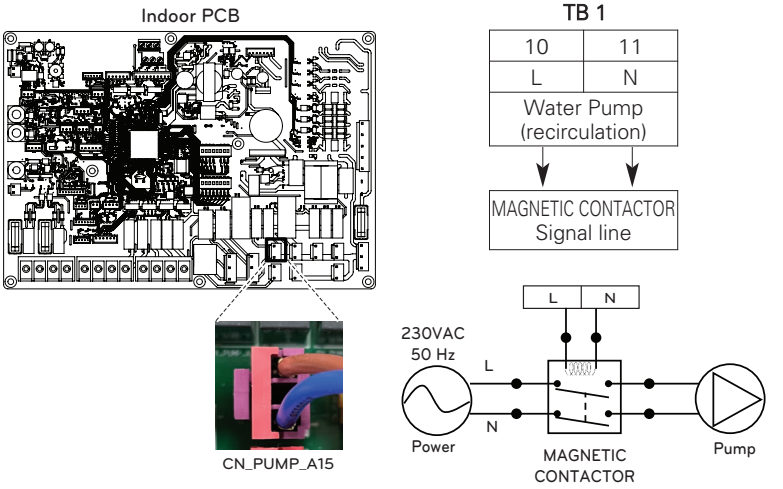

⚠ CAUTION

When connecting a pump, its output must be used as a signal line only.

DHW Tank Kit

This accessory PHLTB is used to connect a DHW boost heater. The kit consists of earth-leakage breaker, circuit breaker and internal wires. It also includes the DHW thermistor.

How to install DHW tank kit

[Parts of DHW Tank Kit]

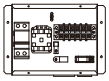

Tank kit body



Sensor

Temperature sensor for DHW tank is used to control hot water temperature of DHW tank.
If sensor will be defective or you don't need a boost heater, you can purchase it separately.
(Model name : PHRSTA0)

Follow below procedures step 1 ~ step 4

Step 1. Uncover DHW tank kit and locate it on the wall.

Step 2. Insert DHW tank sensor to 'CN_TH4' (Red) of the Main PCB as shown below.

Step 3. Insert the sensor probe into the sensor pocket of the DHW tank.

Step 4. Connect power supply to the DHW tank kit as shown fig. 1.

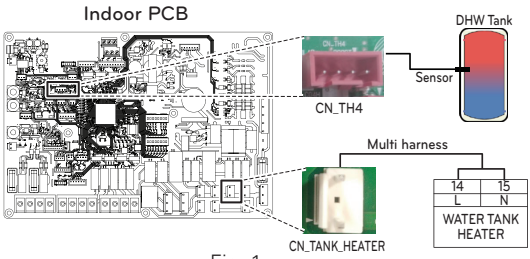

Fig. 1

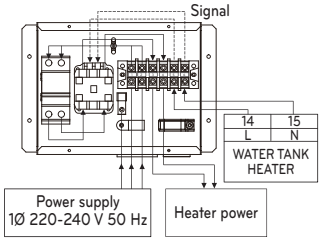

Fig. 3

Insert sensor until the cable tie as shown below.



Fig. 2

How to wire DHW boost heater

※ If LG tank [OSHW-x00F(D)] is used, a Boost heater is included in the tank.

Step 1. Open the cover at side of tank.

Step 2. Find terminal block and connect wires as below. Wires are field-supplied item.

(L): Live signal from heat pump to boost heater.

(N): Neutral signal from heat pump to boost heater.

⚠ WARNING

Wire specification

- Cross-sectional area of the wire should be 6 mm^2.

Adjusting thermostat temperature

- To guarantee proper operation, it is recommended to set temperature of thermostat to maximum temperature (symbol Ⓐ at the picture).

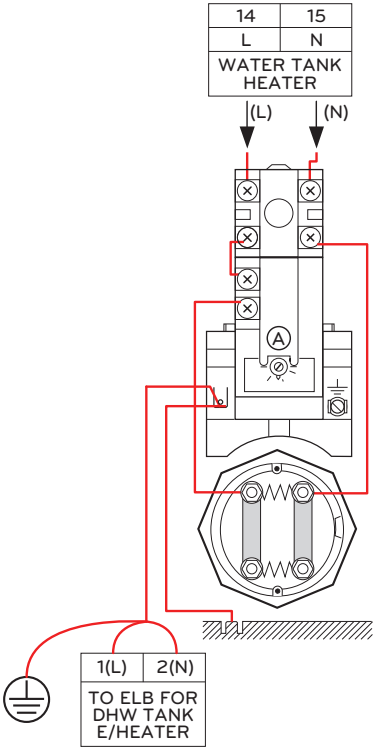

Solar Thermal Kit

This product can be used by connecting the solar thermal kit in the field. It can be utilized hot water heated by solar thermal system. End-user must be install solar thermal kit accessory(PHLLA) provided by LG.

How to Install Solar Thermal Kit

[Parts of Solar Thermal Kit]



Sensor Holder

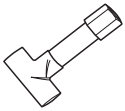

Tube Connector



Solar Thermal Sensor

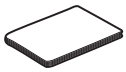

Installation Manual

Follow below procedures step 1 ~ step 4.

Step 1. Check if the power of the unit is turned off.

Step 2. Disassemble front panels and distinguish control box(Indoor) of the unit.

Step 3. Install 3rd-party PT1000 sensor at outlet of Solar thermal collector. Tube connector and sensor holder might be used if necessary. Connect the sensor-wire at port CN_SOLAR.

Step 4. Install tank sensors provided with the kit at top (WATER TANK SENSOR) and bottom (SOLAR PIPE SENSOR) and insert the connector at port CN_TH4 on IDU-PCB.

NOTE

- If single DHW-sensor is already connected at port CN_TH4, disconnect first, before connecting the double-sensor.

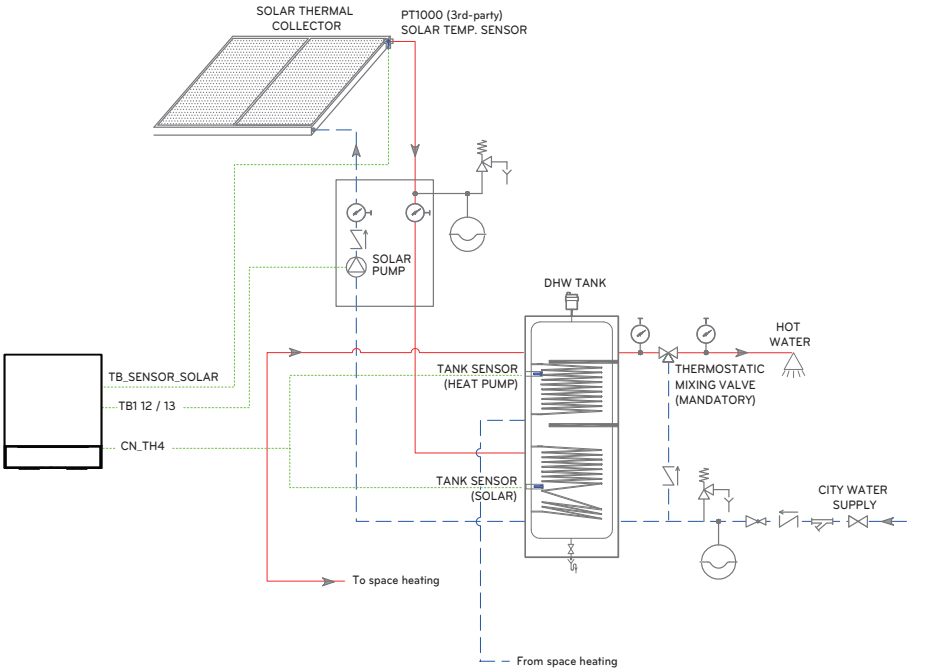

* Water In / Water Out installation scene may vary depending on the model.

Insert sensor until the cable tie as shown below.



⚠ CAUTION

Sensor mounting

Insert sensor into sensor socket and bolt it tightly.

Buffer Tank temperature sensor

If a big buffer tank is connected in parallel to the heat pump, a separate sensor can be connected to PCB-connector TB_SENSOR/BUFFER.

It can be sensing the temperature at the top of the tank or at its outlet pipe.

Consequently, the desired target water temperature (as set by User or defined by weather-dependent function) is compared to the buffer tank temperature.

How to wire Buffer Tank temperature sensor

[Parts of Buffer Tank temperature sensor]



Buffer Tank sensor

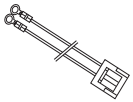

Connect harness

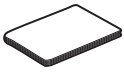

Installation Manual

Follow below procedures step 1 ~ step 5.

Step 1. Check if the power of the unit is turned off.

Step 2. Disassemble front panels and distinguish control box(Indoor) of the unit.

Step 3. Insert the connect harness into PCB(TB_SENSOR / BUFFER) like as below.

Step 4. Connect Buffer Tank sensor and Connect harness.

Step 5. Install Buffer Tank sensor at the top of the tank or at its outlet pipe.

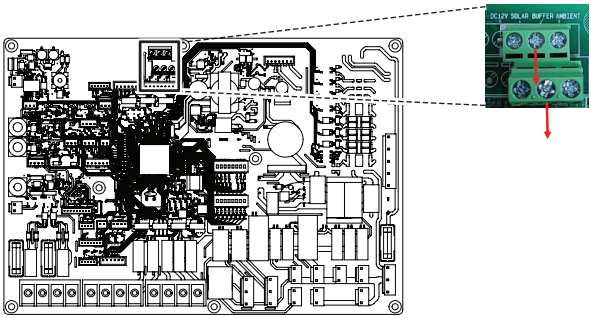

Indoor PCB

Dry Contact

Dry Contact is a solution for automatic control of HVAC system at the owner's best. In simple words, it's a switch which can be used to turn the unit On/Off after getting the signal from external sources.

How to install dry contact

[Parts of Dry contact]



Dry Contact body



Cable(for connecting with IDU)

Follow below procedures step 1 ~ step 4.

Step 1. Check if the power of the unit is turned off.

Step 2. Disassemble front panels and distinguish terminal block in Indoor PCB.

Step 3. Connect cable to the unit PCB(CN_CC) fully.

Step 4. Then, Insert harness to the dry contact PCB(CN_INDOOR) firmly as shown below.

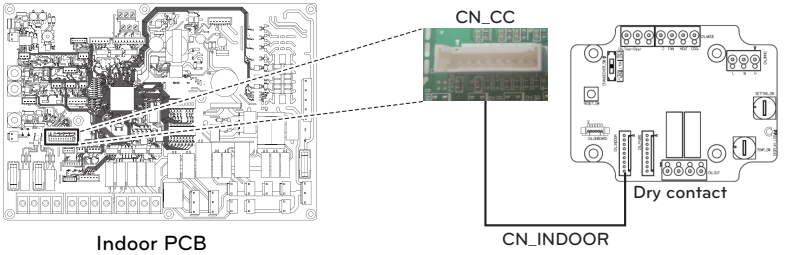

How to mount a dry contact PCB into a product

Step 1. Disconnect the harness connecting the remote controller (HMI) and the main PCB and remove the remote controller (HMI) from the product.

Step 2. Remove the internal protective bracket by unscrewing the three screws.

Step 3. Insert the holes on the Dry contact PCB into the four supporters visible after removing the bracket.

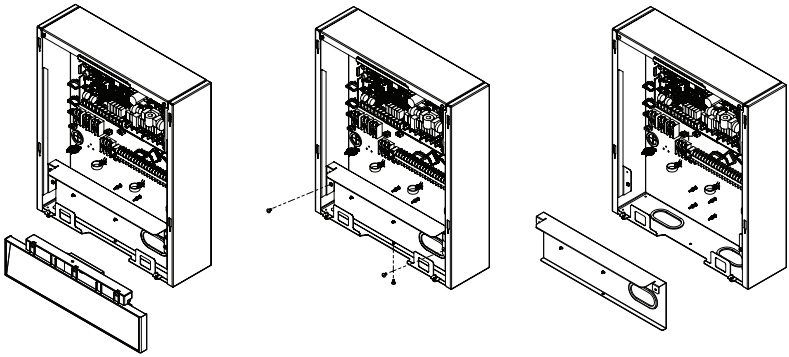

NOTE

- For more information about installing Dry Contact, Please refer installation manual provided with Dry Contact.
- For more settings about Dry Contact, Please refer to "Dry Contact Mode / CN_CC / CN_EXT" that installer setting part.

[Setting of Contact Signal Input]

• For input contact closure only(No power input)

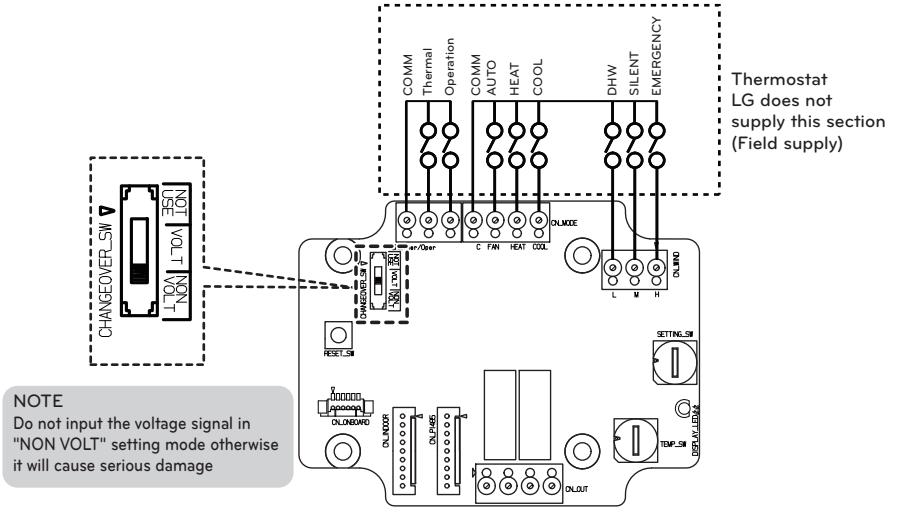

NOTE
Do not input the voltage signal in "NON VOLT" setting mode otherwise it will cause serious damage

• For input contact voltage : DC 12 V, 24 V~

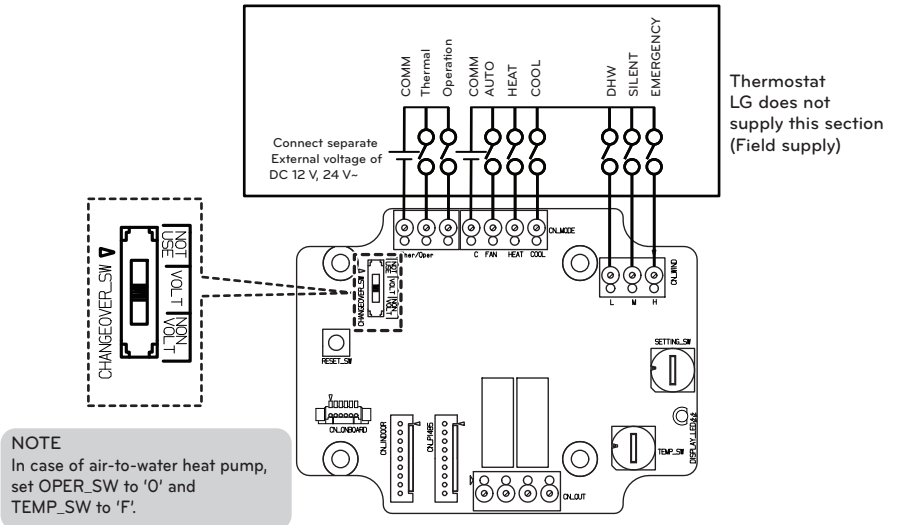

NOTE
In case of air-to-water heat pump, set OPER_SW to '0' and TEMP_SW to 'F'.

Setting_SW Setting

- Normal (0) : Possible to be controlled by the remote controller.
- Forced (1) : Not possible to be controlled by the remote controller.
- There is no OPER_SW setting that each input signal is disabled.

External Controller - Setting up programmable digital input operation

If you need to control the system based on an external digital input (ON/OFF), please refer to the guide below.

Follow below procedures step 1 ~ step 5.

Step 1. Check if the power of the unit is turned off.

Step 2. Disassemble front panels and distinguish control box(Indoor) of the unit

Step 3. Check if the harness(Blue) is inserted fully to the indoor unit PCB (CN_EXT).

Step 4. Connect the external controller to terminal block 2(21/22).

Step 5. Connect the cable and field installation part.

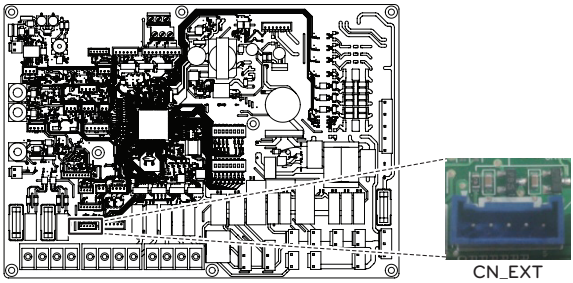

Indoor PCB

TB 2

21	22
L	N
CN_EXT	
External digital input	

Installation example #1

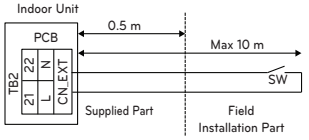

- SW : Single pole switch
  - Select a part with contacts for extremely low amperage
  - DC 5 V ~ 12 V is used at the contact point
  - Switch load is approximately 0.5 ~ 1 mA
- Control cable
  - Cable size : 22 to 26 AWG
  - Don't extend the cable more than 10 meters

Installation example #2

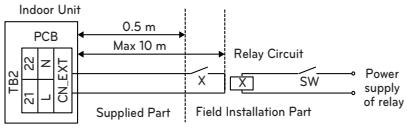

- X : Relay (a point of contact, fixed DC 0.5 ~ 1 mA)
- SW : Distance ON/OFF switch
- Control cable (Indoor unit to Relay Circuit)
  - Cable size : 22 to 26 AWG
  - Don't extend the cable more than 10 meters

Remote Temperature Sensor

Remote temperature sensor can be installed any place a user wants to detect the temperature.

Installation condition

Role and constraint while installation of remote air temperature sensor is very similar to that of thermostat.

- Distance between the unit and the remote air temperature sensor should be less than 15 m due to length of the connection cable of remote air temperature sensor.

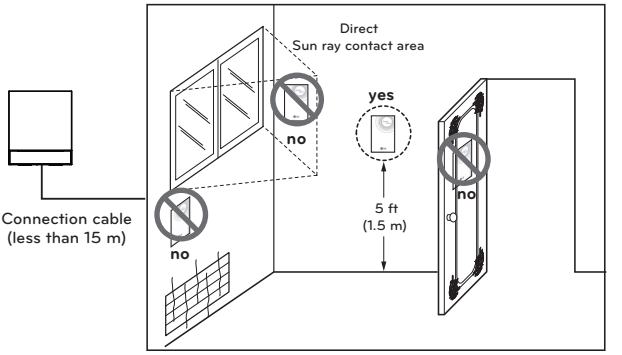

Remote Air Temperature Sensor

⚠ CAUTION

- Choose the place where the average temperature can be measured for the unit operates.
- Avoid direct sunlight.
- Choose the place where the cooling/heating devices do not affect the remote sensor.
- Choose the place where the outlet of the cooling fan do not affect the remote sensor.
- Choose the place where the remote sensor isn't affected when door is open.

NOTE

- For more information about installing Remote Temperature Sensor, Please refer installation manual provided with Remote Temperature Sensor.
- For more settings about Remote Temperature Sensor, Please refer to chapter 'Installer settings' (Configuration/Select room devices).

How to Install Remote Temperature Sensor

[Parts of Remote Temperature Sensor]



Cable



Screw(to fix remote sensor)

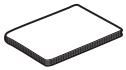

Installation Manual

Follow below procedures step 1 ~ step 5.

Step 1. Decide where the remote temperature sensor is Installed. Then, Determine the location and height of the fixing screws in fig. 1 (Interval between the screws : 60 mm)

Step 2. Check if the power of the unit is turned off.

Step 3. Disassemble front panels and distinguish control box(Indoor) of the unit.

Step 4. Insert temperature sensor into PCB(CN_ROOM1) and fix the sensor firmly in. (Fig. 2)

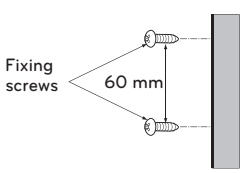

[Fig. 1]

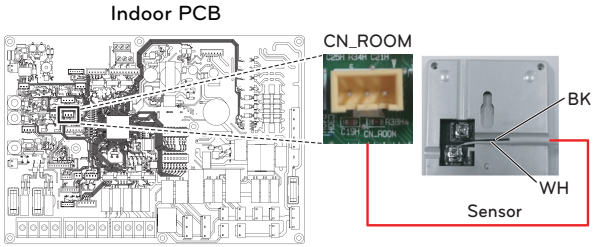

[Fig. 2]

NOTE

- If remote air sensor is used to control mixing circuit, use port CN_LEAK_ROOM2. The polarity is not relevant, if you have to extend the wire.

Step 5. Integrate the remote temperature sensor with the screws as the order of arrows.

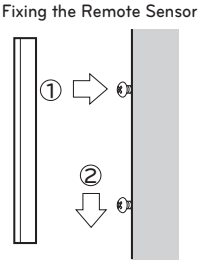

Solar pump

Solar pump can be required to energize water flow when solar thermal system is installed.

How to wire solar pump

Follow below procedures step 1 ~ step 4.

Step 1. Check if the power of the unit is turned off.

Step 2. Disassemble front panels and distinguish control box(Indoor) of the unit.

Step 3. Check if the harness(Black) is inserted fully to the indoor unit PCB (CN_PUMP_A4).

Step 4. Connect the external pump to terminal block 1(12/13).

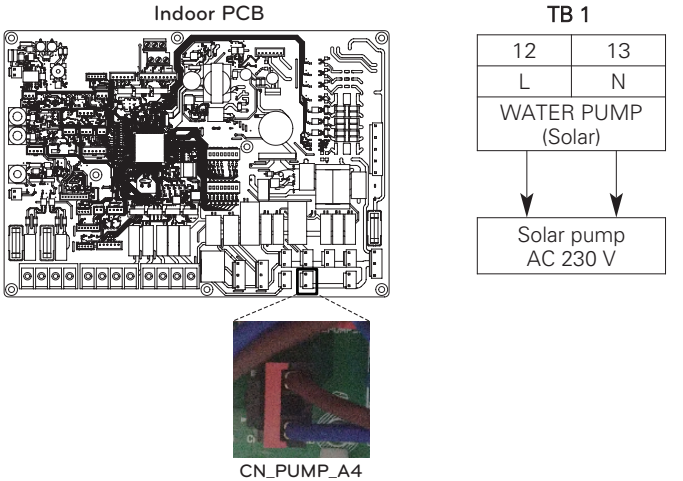

⚠ CAUTION

When connecting a pump its output must be used as a signal line only.

NOTE

PWM-type pump is not supported by this controller.

External pump

External pump (3rd-party) can be utilized if internal pump cannot overcome system pressure losses; if secondary pump is needed (in case parallel buffer tank) or - if two heating circuits are needed - as circuit pump to feed the radiator circuit.

How to wire external pump

Follow below procedures step 1 ~ step 3.

Step 1. Check if the power of the unit is turned off.

Step 2. Disassemble front panels and distinguish terminal block in Indoor PCB.

Step 3. Connect signal cable to terminal block fully.

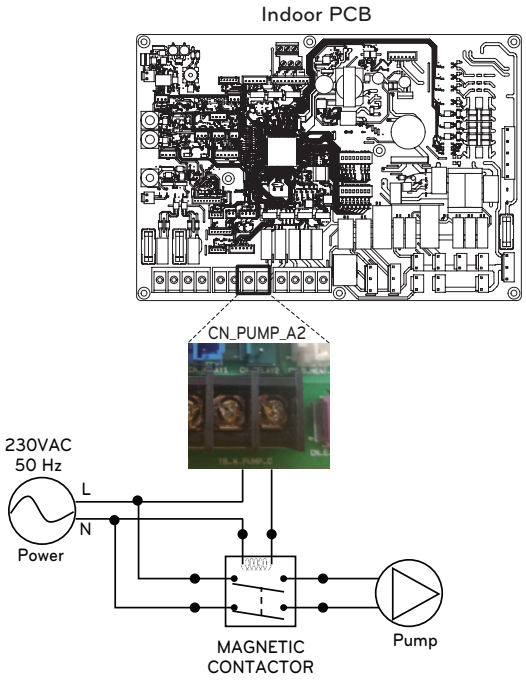

Wi-Fi Modem

Wi-fi modem enables remote system operation from smartphone. Available functions include selection of on/off, operation mode, DHW heating, temperature setup and weekly scheduling etc. For detailed instructions, refer to the manual included in the accessories.

The HMI already has built-in Wi-Fi, but you can install an additional Wi-Fi modem if needed.

How to wire Wi-Fi Modem

[Parts of Wi-Fi modem]



Wi-Fi modem body

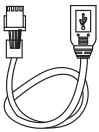

USB Cable

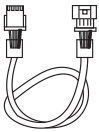

Extension Cable

※ Extension cable for Wi-Fi Modem : PWYREW000 (Sold Separately)

Follow below procedures step 1 ~ step 5.

Step 1. Check if the power of the unit is turned off.

Step 2. Disassemble front panels and distinguish control box(Indoor) of the unit.

Step 3. Connect the USB cable to the indoor unit PCB (CN_WIFI ; Blue) until it clicks into place.

Step 4. Connect the Wi-Fi modem to the USB cable fully.

Step 5. Refer to the image below to install the Wi-Fi modem in the marked position.

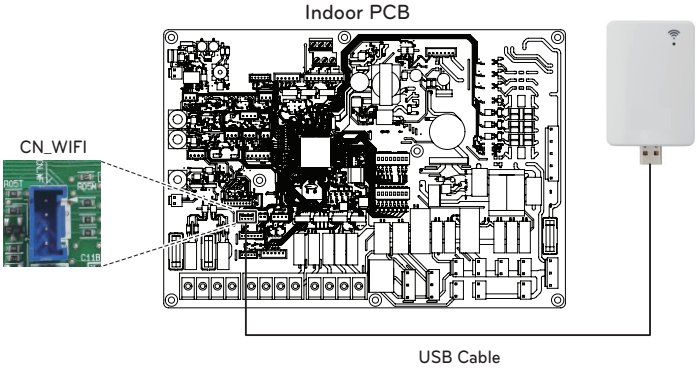

⚠ CAUTION

- Wi-Fi Modem and HMI should not be connected to ThinQ together.

Energy State

This product provides energy states that enable customers to use as much as possible of their own renewable energy. It can shift setpoints depending on input signal from Energy Storage System (ESS) or from any other third-party device using Modbus RTU or Digital 230V inputs.

Available Energy States

There are 8 energy states available. 4 fixed and 4 customizable - each with the possibility to enhance self-consumption of renewable energy.

Energy state	Command	Battery State of charge	Operation (standard setting)					
			Heating		Cooling		Domestic Hot Water	
			Setting	Range	Setting	Range	Setting	Range
1	Operation Off (Utility lock)	Low	Forced internal operation off	Fixed	Forced internal operation off	Fixed	Forced internal operation off	Fixed
2	Normal Operation	Normal	Maintain operation status	Fixed	Maintain operation status	Fixed	Maintain operation status	Fixed
3	Operation On Recommend	High	Increase 2 °C from target temperature	Fixed	Maintain operation Status	Fixed	Increase 5 °C from target temperature	Fixed
4	Operation On Recommend	Very High	Maintain operation status	Fixed	Maintain operation status	Fixed	DHW Target 80 °C	Fixed
5	Operation On Commend	Very High	Increase from target temperature	0/+30 (Default : +5)	Decrease from target temperature	0/-30 (Default : -5)	Increase from target temperature	0/+50 (Default : +30)
6	Operation On Recommend	High	Increase from target temperature	0/+30 (Default : +2)	Decrease from target temperature	0/-30 (Default : -2)	Increase from target temperature	0/+50 (Default : +10)
7	Operation Save	Low	Decrease from target temperature	0/-30 (Default : -2)	Increase from target temperature	0/+30 (Default : +2)	Decrease from Target Temperature	0/-50 (Default : 0)
8	Operation Super Save	Very Low	Decrease from target temperature	0/-30 (Default : -5)	Increase from target temperature	0/+30 (Default : +5)	Decrease from Target Temperature	0/-50 (Default : 0)

Digital Input for energy saving (ESS, Smart Grid)

This product provides two digital inputs (TB_SG:ES1/ES2) that can be used to switch between energy states when not using Modbus RTU (CN-COM).

Available Energy States

There are 8 energy states available in total. Four different states can be triggered using the 230V-inputs – by default Energy states 1-4.

With the digital input assignment in the menu 'Energy state/Digital input assignment of the control panel, different Energy states can be selected for Signals 0:1 and 1:1.

0:0 is always linked with ES2 (Normal operation) and 1:0 is always linked with ES1 (Operation off/Utility lock).

How to set Digital input signal

Follow below procedures step 1 ~ step 3.

Step 1. Check if the power of the unit is turned off.

Step 2. Disassemble front panels and distinguish terminal block in Indoor PCB.

Step 3. Connect signal cable to terminal block in PCB (ES2, ES1) fully as shown below.

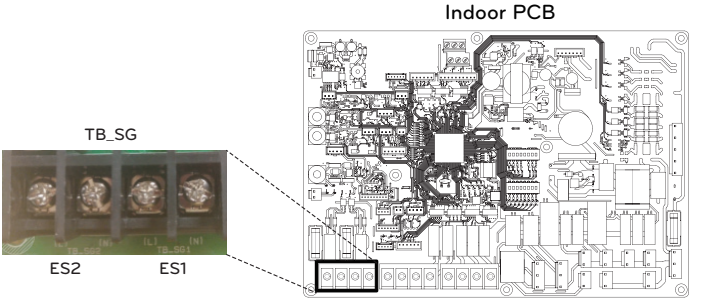

Energy state depending on input signal depends on the connection setting (ESS/SG Ready).

Setting in menu 'Connectivity > Energy state > Connection'		ESS		SG Ready*	
ES1	ES2	SG-Ready v 1.0	Operation	SG-Ready v 1.1	Operation
1	0	Utility lock (Energy state 1)	Turn off and lock electric heaters and Heat pump cycle	Power limitation	Turn off and lock electric heaters and Operate the heat pump under limited power
0	0	Normal operation (Energy state 2)	Normal Operation	Normal operation (Energy state 2)	Normal Operation
0	1	Turn-on recommend (Energy state 3**)	Operation by raising setpoints (Heating +2 °C, DHW +5 °C)	Turn-on recommend. (Energy state 3**)	Operation by raising setpoints (Heating +2 °C, DHW +5 °C)
1	1	Turn-on command (Energy state 4**)	Set DHW setpoint at 80°C	Omitted (same as 1:0)	Turn off and lock electric heaters and Operate the heat pump under limited power

NOTE

Power Limitation can be set in the Energy State within the installer setting.

* In this setting, the new standard SG-ready 1.1 will be applied and it is necessary to define the Power limitation value: CONNECTIVITY > Energy state > Power limitation setting!

** It is possible to apply individual settings by replacing Energy states 3/4 with Energy states 3~8 (CONNECTIVTY > Energy sates > Digital inputs assignment)

2Way Valve

2way valve is required to control water flow while cooling operation. Role of 2way valve is to cut off water flow into under floor loop in cooling mode when fan coil unit is equipped for cooling operation.

General Information

Therma V™ supports following 2way valve.

Type	Power	Operating Mode	Supported
NO 2-wire [1]	230 V AC	Energize : Valve Closing	Yes
		De-Energize : Valve Opening	
NC 2-wire [2]	230 V AC	Energize : Valve Opening	Yes
		De-Energize : Valve Closing	

1) Normal Open type. When electric power is NOT supplied, the valve is open. (When electric power is supplied, the valve is closed.)

2) Normal Closed type. When electric power is NOT supplied, the valve is closed. (When electric power is supplied, the valve is open.)

How to Wire 2Way Valve

Follow below procedures Step 1 ~ Step 2.

Step 1. Uncover front cover of the unit.

Step 2. Find terminal block and connect wire as below.

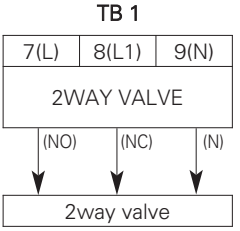

(NO) : Live signal (for Normal Open type) from PCB to 2way valve.

(NC) : Live signal (for Normal Closed type) from PCB to 2way valve.

(N) : Neutral signal from PCB to 2way valve.

⚠ CAUTION

Dew Condensation

- Wrong wiring can yield dew condensation on the floor. If radiator is connected at the under floor water loop, dew condensation can be occurred on the surface of the radiator.

⚠ WARNING

Wiring

- Normal Open type should be connected to wire (NO) and wire (N) for valve opening in cooling mode.
- Normal closed type should be connected to wire (NC) and wire (N) for valve closing in cooling mode.

Final Check

Flow direction :

- Water should not flow into under floor loop in cooling mode.
- To verify the flow direction, check temperature at the water inlet of the under floor loop.
- If correctly wired, this temperatures should not drop below 16 °C in cooling mode.

3Way Valve(Water Tank)

3Way Valve(Water Tank) is required to operate DHW water tank. Role of 3way valve is flow switching between space heating circuit and water tank heating loop.

General Information

Therma V™ supports following 3way valve.

Type	Power	Operating Mode	Supported
SPDT [1] 3-wire	220-240 V~	Selecting Flow A[2] between Flow A and Flow B	Yes
		Selecting Flow B[3] between Flow A and Flow B	Yes

1) SPDT = Single Pole Double Throw. Three wires consist of Live1 (for selecting Flow A), Live 2 (for selecting Flow B), and Neutral (for common).
2) Flow A means 'water flow from the unit to space heating circuit.
3) Flow B means 'water flow from the unit to DHW water tank.'

How to wire 3way valve(Water Tank)

Follow below procedures Step 1 ~ Step 2.
Step 1. Uncover front cover of the unit.
Step 2. Find terminal block and connect wire as below.

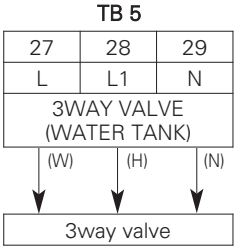

(W) : Live signal (Water tank heating) from PCB to 3way valve
(H) : Live signal (Space heating) from PCB to 3way valve
(N) : Neutral signal from PCB to 3way valve

⚠ WARNING

- 3way valve should select water tank loop when electric power is supplied to wire (W) and wire (N).
- 3way valve should select the heating circuit when electric power is supplied to wire (H) and wire (N).

NOTE

Operation time of flow control valve(e.g. 3way valve or 2way valve) should be less than 90 seconds.

Wall-mounted air sensor

Wall-mounted air sensor is highly recommended when the outdoor unit is excessively exposed to sunlight. It is used for weather-dependent operation (Auto mode).

How to wire Wall-mounted air sensor

[Parts of Wall-mounted air sensor]

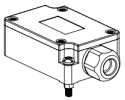

Wall-mounted air sensor

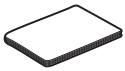

Installation Manual



External Cable

* It is not provided.

Follow below procedures step 1 ~ step 6.

Step 1. Decide where the wall-mounted temperature sensor is Installed.
Then, Fixing the sensor on the wall.

Step 2. Disassemble cover of the sensor and check the thermistor.

Step 3. Connect External cable with the sensor like Fig. 1.

Step 4. Check if the power of the unit is turned off.

Step 5. Disassemble the front panel of the Indoor unit.

Step 6. Insert External cable into PCB(TB_SENSOR/AMBIENT)

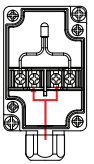

[Fig. 1]

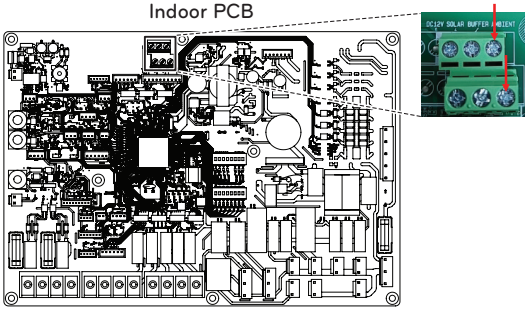

[Fig. 2]

Final check

No.	Check point	Description
1	Connection of Water Inlet/Outlet	- Check if the shut-off valves should be assembled with Water inlet and outlet pipe of the unit - Check the location of the water inlet/outlet water pipe
2	Hydraulic pressure	- Check the pressure of supplying water by using pressure gauge inside the unit (Monitoring screen). - Pressure of Supplying water should be Under 3.0 bar approximately
3	Water pump capacity	- To secure enough water flow rate, do not set water pump capacity as Minimum. - It can lead unexpected flow rate error CH14. (Refer to 'Water Piping and Water Circuit Connection')
4	Transmission line and power source wiring	- Check if Transmission line and power source wiring are separated from each other. - If it is not, electronic noise may occur from the power source.
5	The power cord specifications	- Check the power cord specifications (Refer to 'Communication cable')
6	3Way Valve	- Water should flow from Water outlet of the unit to sanitary tank Water inlet when sanitary tank heating is selected. - To verify the flow direction, Make sure that the water outlet temperature of the unit and water inlet temperature of sanitary Water tank are similar
7	2Way Valve	- Water should not flow into under floor loop in cooling mode. - To verify the flow direction, check temperature at the water inlet of the under floor loop. - If correctly wired, this temperatures should not drop below 16 °C in cooling mode.
8	Air Vent	- Air-vent must be located highest level of Water pipe system - It should be installed at the point which is easy to service. - It takes some times to remove air in the water system if air purge is not performed sufficiently it may occur CH14 error. (Refer to 'Water Charging')

⚠ WARNING

Do not use an automatic air-vent, as flammable refrigerant may leak into the water circuit and get released through an automatic valve into the building.

CONFIGURATION

As **Therma V™** is designed to satisfy various installation environment, it is important to set up system correctly. If not configured correctly, improper operation or degrade of performance can be expected.

DIP Switch Setting

⚠ CAUTION

Turn off electric power supply before setting DIP switch

- Whenever adjusting DIP switch, turn off electric power supply to avoid electric shock.

General Information

Indoor PCB

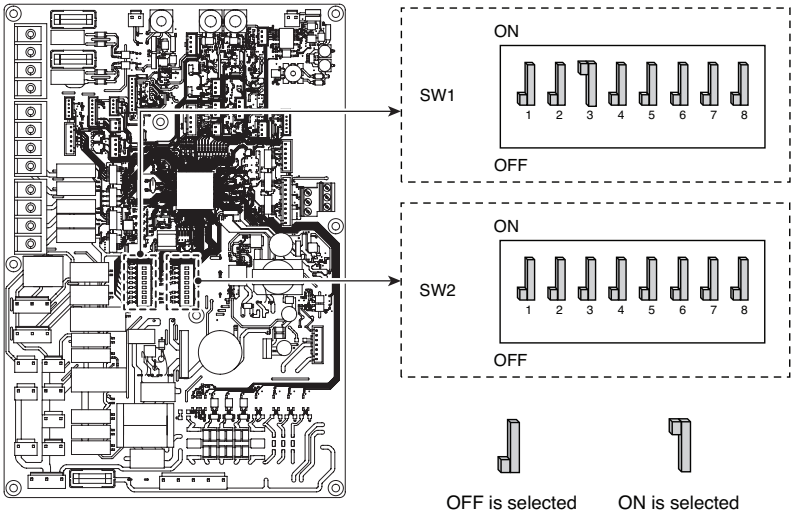

DIP Switch Information

Option Switch 1

Description	Setting		Default
MODBUS Communication Type	 1	As Master (LG extension modules)	 1
	 1	As Slave (3rd party controller)	
MODBUS Function	 2	Unified Open Protocol	 2
	 2	No function	
Communication Outdoor ↔ Indoor Unit	 3	RS-485(EIA-485) method, Flat (9600bps / TLV)	 3
	 3	Unused	
Heating cycle limited operation control	 7	Protective function is not used	 7
	 7	Protective function is used	
Antifreeze Agent	 8	Antifreeze agent is not used	 8
	 8	Antifreeze agent is used *	

* Possibility to allow colder water temperature by setting.
Bridge at CN_ANTI_SW must be dis-connected to enable setting.

⚠ WARNING

NEVER change setting if antifreeze agent (glycole) is not actually added.

Option Switch 2

Description	Setting		Default
Accessory installation information	 2 3	Heat pump is installed (Heating (Cooling) circuit only)	 2  3
	 2 3	Heat pump + DHW tank is installed	
	 2 3	Heat pump + DHW tank + Solar thermal system is installed	
Cycle	 4	Heating Only	 4
	 4	Heating & Cooling	
Selecting Backup heater capacity	 6 7	Electric heater is not used	 6  7
	 6 7	Unused	
	 6 7	Unused	
	 6 7	ACC / 3rd-party backup heater is used	
Thermostat installation information	 8	Thermostat is NOT installed	 8
	 8	Thermostat is installed	

Outdoor PCB

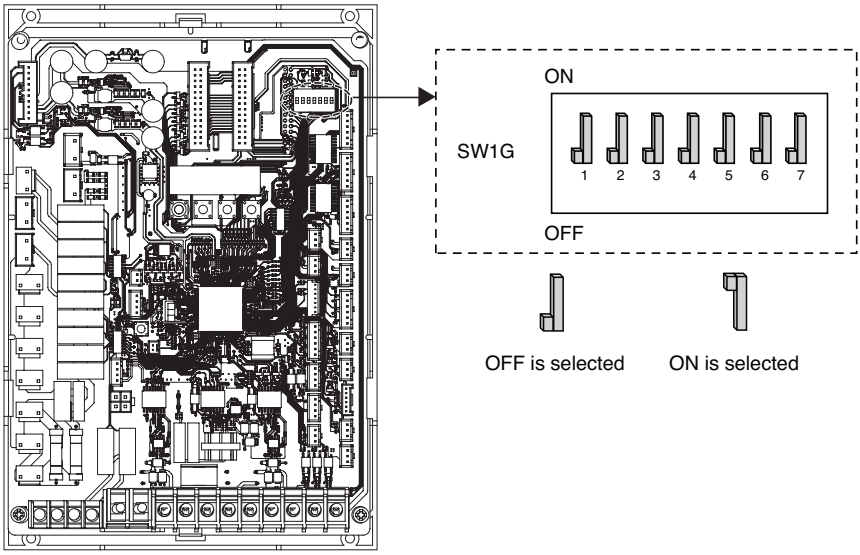

DIP Switch Information

[UB40, UB60 Series]

Description	Setting		Default
Low Noise Mode	 2	Always Mode - Maintain low noise mode even if target temp. cannot be reached for long time.	2
	 2	ON/OFF Partial mode - Escape low noise mode if target temp. cannot be reached for long time.	
Peak Control	 3 4	Max Mode	
	 3 4	Peak Control Step 1 - To limit maximum current (Power saving)	3
	 3 4	Peak Control Step 2 - To limit maximum current (Power saving)	 4
	 1 2 3	Peak Control Step 3 (3Ø Only) - To extend maximum frequency (Using hot gas defrosting)	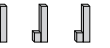 1 2 3
	 3 4 5	Peak Control Step 4 (3Ø Only) - To extend maximum frequency (NOT using hot gas defrosting)	 3 4 5
Hot Gas Defrostiong Mode	 4 5	Hot Gas Defrosting is active (At low inlet water temperature)	 4 5
	 4 5	Hot Gas Defrosting is inactive (At low inlet water temperature)	

※ When setting the limited low noise mode, Mode can be exited to secure capacity after operating for a certain time.

※ In the site with external pump, it is recommended to disable the hot gas defrost mode.

[UB41, UA41 Series]

Description	Setting		Default
Low Noise Mode	 2	Always Mode - Maintain low noise mode even if target temp. cannot be reached for long time.	 2
	 2	ON/OFF Partial mode - Escape low noise mode if target temp. cannot be reached for long time.	
Peak Control	 3  4	Max Mode	 3  4
	 3  4	Peak Control Step 1 - To limit maximum current (Power saving)	
	 3  4	Peak Control Step 2 - To limit maximum current (Power saving)	

※ When setting the limited low noise mode, Mode can be exited to secure capacity after operating for a certain time.

※ In the site with external pump, it is recommended to disable the hot gas defrost mode.

※ Peak Control Step 3&4: Please contact LG Service for details.

NOTE

Input current value can be limited by DIP Switch operation.

Model Name			Peak Control Mode Running Current (A)	
Chassis	Phase (Ø)	Capacity (kW)	1 Step	2 Step
UB40 Series	1	7	-	15
		9	-	16
	3	7	7	5
		9	8	6
UB60 Series	1	12	-	20
		14	-	20
		16	-	20
	3	9	7	5
		12	7	5
		14	8	6
		16	9	7
UA41 Series	1	5	15	13
		7	18	16
		9	20	18
	3	7	10	9
		9	11	10
UB41 Series	1	12	24	21
		14	25	22
		16	26	23
	3	12	9	8
		14	10	9
		16	11	10

DESCRIPTION OF THE OPERATION

Installation Wizard

- This program runs during the initial operation of the product.
- The screen configuration may vary depending on the model and installation environment.

Step 1. Basic Settings

Please proceed with the basic setup of the remote controller.
Please change the date and time settings to the current time. Otherwise, ThinQ connectivity may be limited.



Step 2. Installation part check

Select the components to use or choose the basic settings according to the installation environment.

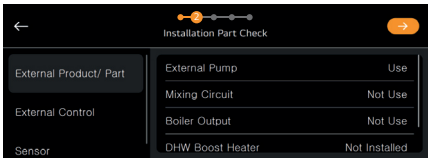

Step 3. Installation setting

Please proceed with the detailed settings for each component selected in Step 2.



Step 3. Air purge Mode

Please vent the air inside the system.

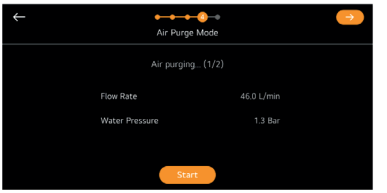

Step 5. Backup heater wiring test

Select the settings for the installed backup heater and perform a wiring error test.

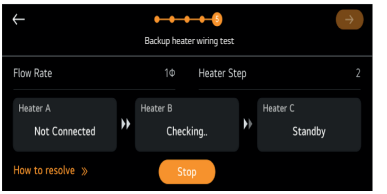

Main screen

In the main screen, you can move to other screen by pressing the button.



Menu screen

In the main screen, press [☰] button to move to the menu screen.

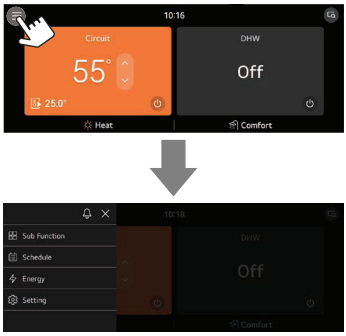

In the menu screen, press [Setting] category to move to setting screen.

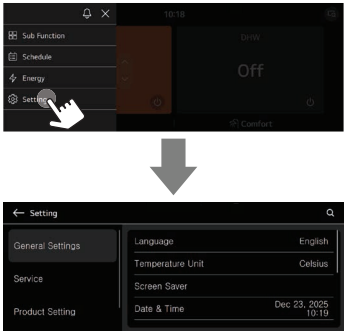

Setting screen

Press the category to move to detail screen.

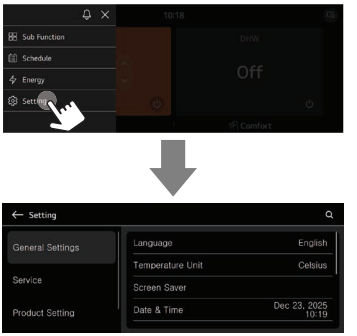

Slide up and down the screen to see all categories.



In each detail screen of the menu, as in the box in the under figure, you can move to the detail setting screen by pressing the category.

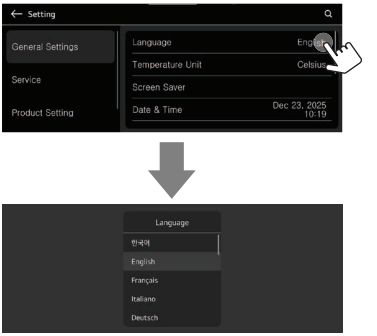

SERVICE SETTING

How to enter service setting

To enter the menu displayed at the bottom, you need to enter the service setting menu as follows.

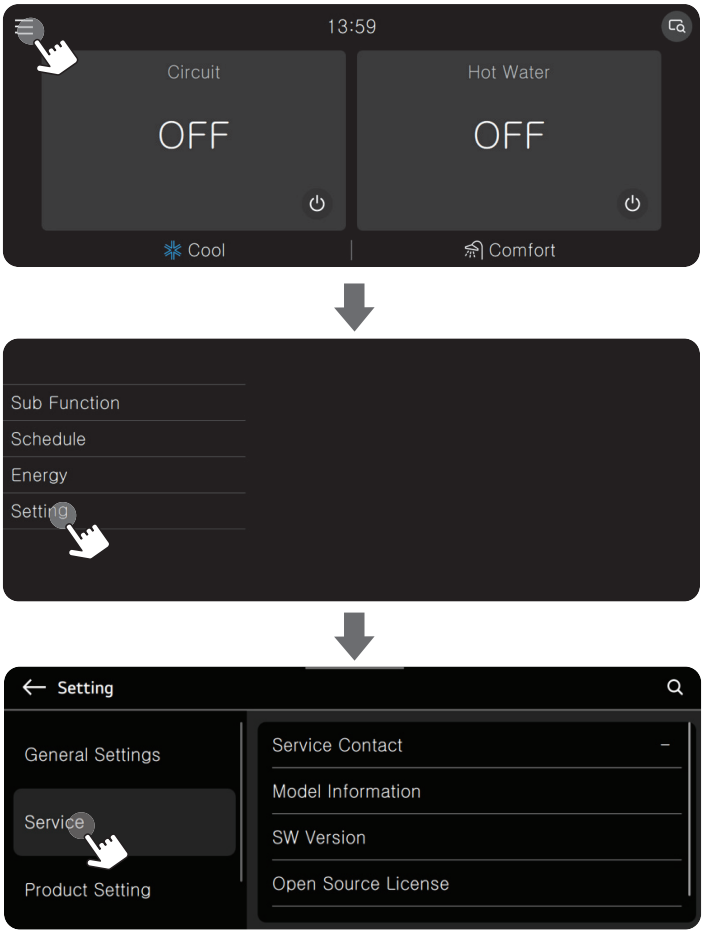

Service setting

- You can set the product service functions.
- Some functions may not be displayed/operated in some product types.

Menu	Description
Service contact	Check and input the service center phone number that you can call when there is service issue.
Model information	View product and capacity information
SW Version	Check the remote controller software version.
Open Source License	View the remote controller's open source license.
Installation Wizard	Start the Installation Wizard.
Software Update	Update the remote controller software version.

Service contact

Check and input the service center phone number that the user can call when there is service issue.

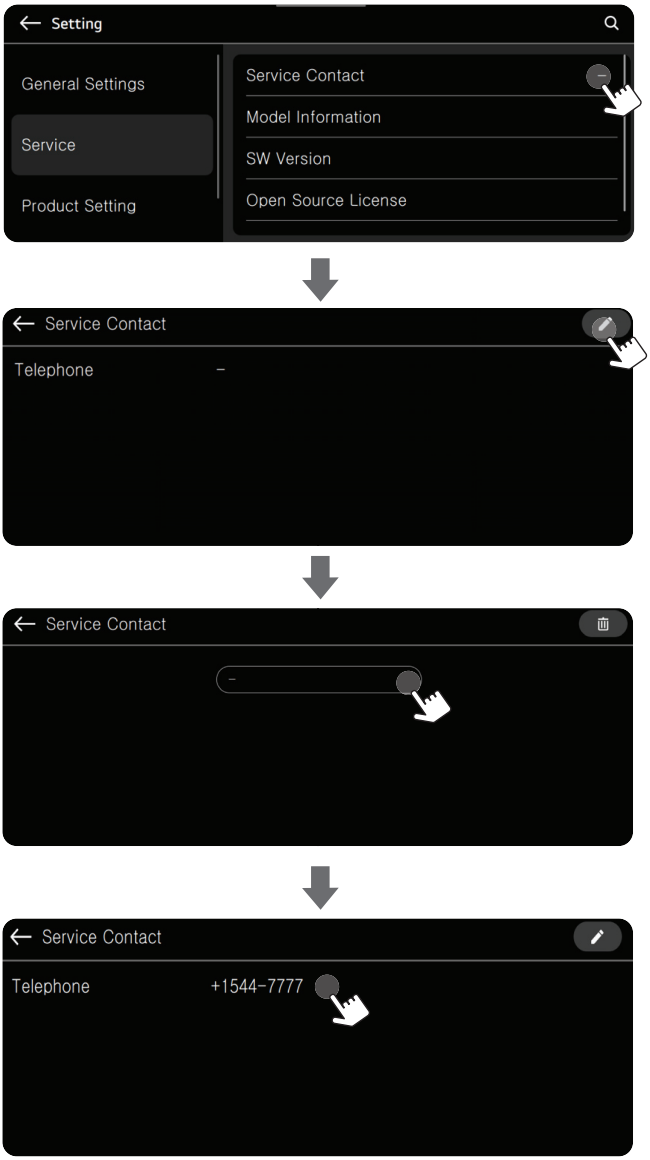

INSTALLER SETTING

How to enter installer setting

⚠ CAUTION

The installer setting mode is the mode to set the remote controller's detail function.
If the installer setting mode is incorrectly set, it may cause product failure, user's injury, or property damage. It must be set by the installation specialist with the installation license, and if it is installed or changed without installation license, all problems caused will be the responsibility of the installer, and may void the LG warranty.



※ Installer setting password
Main screen ⟶ Menu ⟶ Setting ⟶ Service ⟶ SW Version
Example) SW version : 5.00.1
In the above case, the password is 5001

NOTE

Some categories of the installer setting menu may not be available depending on the product function or the menu name may be different.

Installer setting

- You can set the product user functions.
- Some functions may not be displayed/operated in some product types.

Menu hierarchy & Setting				Explanation	Detailed explanation	Available Setting options (range)	Unit	Default
CONFIGURATION	Control method			The product can be operated according to air temperature, water temperature, or both. - **Water:** The product operates by comparing the current water temperature and the target water temperature. - **Air** : The product operates by comparing the current air temperature and the target air temperature. - **Air+Water :** The product operates considering both the water temperature and air temperature conditions above.	O	Air / Water / Air+Water	-	Water
	Select room devices	RMC linked to		Definition to which circuit this Remote controller is linked to. - **Circuit 1&2** : This RMC is used to control the whole heating system - **Circuit 1** : This RMC is used to control Circuit 1 (unmixed circuit) only - **Circuit 2**: This RMC is used to control Circuit 2 (mixed circuit) only	O	Circuit1&2 / Circuit1 / Circuit2	-	Circuit 1&2
		Circuit 1	Digital input	With this setting, a Digital input (Dry contact, 3rd party thermostat or external input) can be linked to Circuit 1. Consequently, the signal will be used as thermo-on/off command for Circuit 1 only.		CN-CC / CN-THMO / CN-EXT	-	CN-CC
			Room air sensor option	In case of Air- or Water+Air-control method, either a Room sensor or the Remote controller can be used to sense the Room air temp. The device must be installed in a Reference room of Circuit 1.		Room Sensor / Remote Controller	-	Remote Controller

Menu hierarchy & Setting				Explanation	Detailed explanation	Available Setting options (range)	Unit	Default
CONFIGURATION	Select room devices	Circuit 2	Digital input	With this setting a Digital input (Dry contact, 3rd party thermostat or external input) can be linked to Circuit 2. Consequently, the signal will be used as thermo-on/off command for Circuit 2 only.		CN-CC / CN-THMO / CN-EXT	-	CN-CC
			Room air sensor option	In case of Air- or Water+Air-control method, either a Room sensor or the Remote controller can be used to sense the Room air temp. The device must be installed in a Reference room of Circuit 2.		Room Sensor / Remote Controller	-	Remote Controller
	Mixing Circuit		Mixing Circuit	Additional mixing circuit is enabled using sensor CN-MIX-OUT and 3rd-party mixer. In case of 'Heating only', the Mixing valve is closed and the Mix pump is off during Cooling operation.		Not use / Heating & Cooling / Heating only	-	Not use
			Valve Closing Time	Set operating time of 3rd-party mixer motor (Full open → Full close)		60 ~ 999	sec	240
	Backup heater for DHW			Defines if Backup heater is used for re-heating the DHW in case of Emergency. To use this function the backup heater must be installed and configured by DIP switch! If the DHW boost heater inside of the tank is configured too, both heaters will run in parallel! Incase of "Combination indoor unit" with integrated tank, always the Backup heater is supporting both - space heating and DHW heating!		Use / Not use	-	Not use

Menu hierarchy & Setting			Explanation	Detailed explanation	Available Setting options (range)	Unit	Default
CONFIGURATION	External pump	Pump Setting	Setting if External pump is used and for what purpose. - Heat & Cool & DHW: The external pump operates synchronously with the built-in pump inside the product. - Heat & Cool: The external pump operates synchronously with the built-in pump inside the product - except for DHW heating. - Circuit 1: The external pump is installed within Radiator circuit (Circuit 1) in case of two circuits.	O	Not use / Heat & Cool & DHW / Heat&Cool / Circuit1	-	Not use
		Boiler Setting	Setting whether to use an external pump when using the boiler. - Remark: If the boiler operation function is enabled, the function is activated.		Use / Not use	-	Not use
	Boiler output		Setting whether 3rd-party boiler is connected to TB_EXT/EXT_BOILER and enabled below Bivalent point. **Remark:** The boiler won't be controlled actively. Only it is released and must operate according its own controls. **- Heat & DHW:** The boiler is used for Space heating and DHW. **- Heating only:** The boiler is used for Space heating only. The heat pump is heating the DHW year-round.	O	Not use / Heat & DHW / Heating only	-	Not use

Menu hierarchy & Setting			Explanation	Detailed explanation	Available Setting options (range)	Unit	Default
CONFIGURATION	DHW boost heater		If an electric boost heater is installed in the DHW tank, choose 'Installed'.		Installed / Not installed	-	Installed
	Select outdoor air sensor		Definition which sensor is used to read the outdoor air temperature needed for Auto mode.	O	ODU air sensor / Wall-mounted air sensor	-	ODU air sensor
	Buffer tank sensor		An additional temperature sensor is installed inside or at outlet of the buffer tank and used control the water temp.		Not use / Use	-	Not use
	Boiler Pump Operation	Main Pump	Setting defines if the Main pump remains operative, while the boiler is enabled.		Not use / Use	-	Not Use
		External Pump	Setting defines if the External pump remains operative, while the boiler is enabled.		Not use / Use	-	Use
	RMC master/slave		If an additional RMC is used to be placed inside Reference room, this setting must be changed to 'Slave'. The RMC that becomes 'Master' will show all setting options. The 'Slave' will show the complete User menu, but a limited Installer menu. Room air temp. measured by Slave will be used as reference for ‚Air' and ‚Air+Water' control.	O	Master / Slave	-	Master

Menu hierarchy & Setting				Explanation	Detailed explanation	Available Setting options (range)	Unit	Default
CONFIGURATION	Backup Heater Function	Use Type		- Heat: Backup heater is available when using heating. - Heat & DHW: Backup heater is available when using heating and DHW.		Heat / Heat & DHW	-	Heat
		Control standard		Select the type of heater you use		*LG 1Ø / LG 3Ø / External	-	-
		Capacity Setting	LG 1Ø / LG 3Ø	- Step setting: Set the heater capacity through steps.	O	Step setting	*1/2/3 step	-
			External	- Step and capacity Setting: Set the steps and set the capacity of the heater corresponding to each step.		Step and capacity setting	*1/2/3 step 0.0~25.0 kW	
		Use Setting	Backup Heater Release Temp.	Bivalent point: Below this outdoor air temperature, the backup heater is enabled. Remark: Even if outdoor temp. is colder, the heater will only turn on if necessary!		-25~18	°C	-5
			Delay Time	Set the minimum time for which the backup heater can be turned on after the outdoor unit is running.		3~60	min	
		Emergency for DHW		Defines if Backup heater is used for re-heating the DHW in case of Emergency. To use this function the backup heater must be installed and configured by DIP switch! If the DHW boost heater inside of the tank is configured too, both heaters will run in parallel! In case of "Combination indoor unit" with integrated tank, always the Backup heater is supporting both - space heating and DHW heating!		Use / Not Use	-	Not use

*

Applicable Model	Function Activation	Step Setting	Capacity setting		
			A	B	C
Hydro unit Combi unit	Integrated 1Ø 3 kW	1	3 kW (Fix)	Disable	Disable
	Integrated 1Ø 6 kW	1~2	3 kW (Fix)	3 kW (Fix)	Disable
	Integrated 3Ø 9 kW	1~3	3 kW (Fix)	3 kW (Fix)	3 kW (Fix)
	3rd Party	1~3	0.0~25.0 kW	0.0~25.0 kW	0.0~25.0 kW
Control unit	ACC. LG 1Ø	1~2	3 kW (Fix)	3 kW (Fix)	Disable
	ACC. LG 3Ø	1	2 kW (Fix)	2 kW (Fix)	2 kW (Fix)
	External	1~3	0.0~25.0 kW	0.0~25.0 kW	0.0~25.0 kW

Menu hierarchy & Setting			Explanation	Detailed explanation	Available Setting options (range)	Unit	Default
GENERAL	Forced pump operation	Forced pump operation	If this function is activated, the internal pump will run at set interval to prevent stucking of pump when unit is out of operation for long time. Based on setting 'Configuration/External pump', the External pump will be activated, too.		Use / Not use	-	Use
		Oper. Cycle	If the integrated water pump has not operated for this time period, it will be activated by force.		20 ~ 180	h	20
		Oper. Time	After activation, the pump will operate for this time period.		1 ~ 10	min	10
	Pump prerun/overrun	Pump prerun	Time how long pump will operate, before compressor starts.		1 ~ 10	h	1
		Pump overrun	Time how long pump will operate, after compressor stopped.		1 ~ 10	min	1

Menu hierarchy & Setting				Explanation	Detailed explanation	Available Setting options (range)	Unit	Default
GENERAL	Water flow control	Control Method		Different options to control the integrated circulation pump (Main pump): - Pump capacity: Fixed setting for pump capacity (0-100%) is applied. - Fixed flow rate: Fixed setting for flow rate in l/min is applied. - Fixed △T: Fixed setting for temperature difference between inlet and outlet. - Optimal flow rate: The target temperature difference between inlet and outlet is automatically adjusted (between 5 and 10 Kelvin) based on target temperature.	O	- Optimal Flow Rate - Pump Capacity - Fixed Flow Rate - Fixed △T	-	Optimal flow rate
		Pump Capacity	Heating / Cooling	The pump capacity is fixed at the set value if control method 'Pump capacity' is chosen and the heat pump cycle is in operation. - **Remark**: The following settings are used for all Control methods		10 ~ 100	%	100
			Cycling	Setting defines the pump capacity when the heat pump is cycling while the compressor is in standby (thermo-off condition).		10 ~ 100	%	30
			Anti-scale	Setting defines the pump capacity when the frost-protection function is enabled.		10 ~ 100	%	50
			Frost protection	Setting defines the pump capacity during 'Forced pump operation'.		10 ~ 100	%	100
			Prerun/Overrun	Setting defines the pump capacity during 'Pump prerun/overrun' time.		10 ~ 100	%	100

Menu hierarchy & Setting				Explanation	Detailed explanation	Available Setting options (range)	Unit	Default
GENERAL	Water flow control	Fixed Flow Rate	Fixed flow rate (Heat)	The target flow rate can be set individually for each operation mode, if control method 'Fixed flow rate' is chosen.		11 ~ 46	l/min	46
			Fixed flow rate (Cool)			11 ~ 46	l/min	46
			Fixed flow rate (DHW)			11 ~ 46	l/min	46
		Fixed △T	Fixed △T (Heat)	The target temperature gap between inlet and outlet can be individually set for each operation mode, if control method 'Fixed △T' is chosen.		5 ~ 13	K	5
			Fixed △T (Cool)			5 ~ 13	K	5
			Fixed △T (DHW)			5 ~ 13	K	5
	Energy Monitoring	Energy Monitoring		- Not use : Energy data is not displayed - Use: Energy data is displayed. In general, the internal sensors are used to estimate the consumed electricity and generated thermal energy. If metering module is connected, the estimated values will be overwritten with measured values. **Remark:** If anti-freeze is used, the internal metering becomes too inaccurate and either metering module should be connected or the setting should be changed to 'Not use'!		Not use / Use	-	Use

Menu hierarchy & Setting				Explanation	Detailed explanation	Available Setting options (range)	Unit	Default
GENERAL	Energy Monitoring	Backup heater capacity	Backup heater type	Definition what type of electric backup heater is used.		LG 1Ø / LG 3Ø / External	-	LG 1Ø
			Backup heater capacity	Input the rated capacity of the external backup heater. It is used for energy monitoring only.		1.0 ~ 10.0	kW	6
	Anti-freezing option			Setting defines the anti-freezing protection while the Remote controller is turned off. - **Type 1:** Outside air temp. and Water inlet temp. is supervised. - **Type 2:** Only outside air temp. is supervised.	O	Type1 / Type2	-	Type 1
	Backup heater release temp.			Bivalent point: Below this outdoor air temperature, the backup heater is enabled. **Remark:** Even if outdoor temp. is colder, the heater will only turn on if necessary!	O	-25 ~ 18	°C	-5
	Screed drying		Activation	Activation/Deactivation of screed-drying program. If activated, the leaving water target temp. will follow strict pattern acc. EN1264. Default time of complete program is 30 days!	O	On / Off	-	Off
			Step	If program was interrupted, it can be re-started from any step.		1 ~ 11	-	1
			Max. temp.	Max. target temp. while Screed drying is active. Match with specification of underfloor heating system.		35 ~ 55	°C	55
			Step 8 Holding	Defines how long the max. temperature shall be kept.		1 ~ 30	days	7
	Heating priority			Determination if room heating or sanitary hot water has higher priority to be heated.		DHW / Space heating	-	DHW

Menu hierarchy & Setting				Explanation	Detailed explanation	Available Setting options (range)	Unit	Default
GENERAL	Buffer tank hysteresis			If the buffer tank is hot enough to satisfy the heat(cool) demand of the heating (cooling) circuit(s), the heat pump won't turn on, until the buffer tank temp. has dropped below the target of the heating circuit (has increased above the target of the cooling circuit). The hysteresis should be increased step-by-step if the heat pump cycles too much even in wintertime.	O	0 ~ 20	K	2
	Password Reset			Setting will reset the User password to '0000'.		Reset	-	-
CIRCUIT1	Basic settings	Control method(Heat)		Definition if inlet or outlet temp. is used as target for heating operation.		Inlet / Outlet	-	Outlet
		Control method(Cool)		Definition if inlet or outlet temp. is used as target for Cooling operation.		Inlet / Outlet	-	Outlet
		Main Pump Operation (Heat)	Type	**- Time setting :** Main circulation pump is turned on and off according to set On/Off times. **- Continuous operation :** Main circulation pump is running continuously during heating (cooling) period. Only in summertime it is turned off.		Time setting / Continuous Operation		Time setting
			On	Setting defines duration of Main pump operation to sense reference temp. from Circuit 1. Value should be adjusted based on length of pipework.		1 ~ 60	min	3
			Off	Setting defines interval between Main pump operations, while Thermo-off. Value should be adjusted based on building insulation standard.		1 ~ 60	min	3

Menu hierarchy & Setting				Explanation	Detailed explanation	Available Setting options (range)	Unit	Default
CIRCUIT1	Basic settings	Main Pump Operation (Cool)	Type	**- Time setting** : Main circulation pump is turned on and off according to set On/Off times. **- Continuous operation** : Main circulation pump is running continuously during heating (cooling) period. Only in summertime it is turned off.		Time setting / Continuous Operation		Continuous Operation
			On	Setting defines duration of Main pump operation to sense reference temp. from Circuit 1. Value should be adjusted based on length of pipework.		1 ~ 60	min	3
			Off	Setting defines interval between Main pump operations, while thermo-off. Value should be adjusted based on building insulation standard.		1 ~ 60	min	3
		Hysteresis water temp. (Heat)	Temp On	Settings define the hysteresis applied to water temp. control of Circuit 1		-9.0 ~ 0.0	K	-2.0
			Temp Off			0.0 ~ 4.0	K	2.0
		Hysteresis water temp. (Cool)	Temp On	Settings define the hysteresis applied to water temp. control of Circuit 1		0.0 ~ 3.0	K	0.5
			Temp Off			-3.0 ~ 0.0	K	-0.5
		Hysteresis room air (Heat)	Temp On	Settings define the hysteresis applied to room air temp. control of Circuit 1		-3.0 ~ 0.0	K	-0.5
			Temp Off			0.0 ~ 4.0	K	1.5
		Hysteresis room air(Cool)	Temp On	Settings define the hysteresis applied to room air temp. control of Circuit 1		0.0 ~ 3.0	K	0.5
			Temp Off			-3.0 ~ 0.0	K	-0.5
	Room Heating	Air heating set temp	Min.	The User's setting range of room air target temperature in HEAT mode can be limited	O	16 ~ 22	°C	16
			Max.			24 ~ 30	°C	30
		Water heating set temp	Min.	The User's setting range of water target temperature in HEAT mode can be limited	O	15 ~ 34	°C	15
			Max.			35 ~ 75	°C	65

Menu hierarchy & Setting				Explanation	Detailed explanation	Available Setting options (range)	Unit	Default
CIRCUIT1	Room Cooling	Air cooling set temp	Min.	The User's setting range of room air target temperature in COOL mode can be limited	O	16 ~ 22	°C	16
			Max.			24 ~ 30	°C	30
		Water cooling set temp	Min.	The User's setting range of water target temperature in COOL mode can be limited	O	5 ~ 20	°C	10
			Max.			22 ~ 27	°C	24
CIRCUIT2	Basic settings	Cut Off Temperature (Heat)		Maximum temperature according underfloor heating system's manufacturer. If Mix temp. sensor reach this temperature, the Mix pump will stop and the Mixing valve will close. The water will circulate inside the Mix circuit until temperature has dropped.		20 ~ 75	°C	40
		Cut Off Temperature (Cool)		Minimum temperature according underfloor heating system's manufacturer. If temperature is reached, the Mix pump will stop and the Mixing valve will close. The water will circulate inside the Mix circuit until temperature has risen again. Remark: Prevention of condensate must be realized by additional measures like humidity monitor.		5 ~ 24	°C	18
		Mixing pump operation(Heat)	Type	- **Time setting** : Circulation pump installed in the mixing circuit is turned on and off according to set On/Off times. - **Continuous operation** : Circulation pump installed in the mixing circuit is running continuously during heating (cooling) period. Only in summertime it is turned off.		Time setting / Continuous Operation		Time setting
			On	Setting defines duration of Mixing pump operation to sense reference temp. from Circuit 2. Value should be adjusted based on length of pipework.		1 ~ 60	min	3
			Off	Setting defines interval between Mixing pump operations, while Thermo-off. Value should be adjusted based on building insulation standard.		1 ~ 60	min	3

Menu hierarchy & Setting				Explanation	Detailed explanation	Available Setting options (range)	Unit	Default
CIRCUIT2	Basic settings	Mixing pump operation(Cool)	Type	- Time setting : Circulation pump installed in the mixing circuit is turned on and off according to set On/Off times. - Continuous operation : Circulation pump installed in the mixing circuit is running continuously during heating (cooling) period. Only in summertime it is turned off.		Time setting / Continuous Operation		Continuous Operation
			On	Setting defines duration of Mixing pump operation to sense reference temp. from Circuit 2. Value should be adjusted based on length of pipework.		1 ~ 60	min	3
			Off	Setting defines interval between Mixing pump operations, while Thermo-off. Value should be adjusted based on building insulation standard.		1 ~ 60	min	3
		Hysteresis water temp.(Heat)	Temp On	Settings define the hysteresis applied to water temp. control of Circuit 2		-9.0 ~ 0.0	K	-2.0
			Temp Off			0.0 ~ 4.0	K	2.0
		Hysteresis water temp.(Cool)	Temp On	Settings define the hysteresis applied to water temp. control of Circuit 2		0.0 ~ 3.0	K	0.5
			Temp Off			-3.0 ~ 0.0	K	-0.5
		Hysteresis room air(Heat)	Temp On	Settings define the hysteresis applied to room air temp. control of Circuit 2		-3.0 ~ 0.0	K	-0.5
			Temp Off			0.0 ~ 4.0	K	1.5
		Hysteresis room air(Cool)	Temp On	Settings define the hysteresis applied to room air temp. control of Circuit 2		0.0 ~ 3.0	K	0.5
			Temp Off			-3.0 ~ 0.0	K	-0.5

Menu hierarchy & Setting				Explanation	Detailed explanation	Available Setting options (range)	Unit	Default
CIRCUIT2	Basic settings	Comp. Operation		- Type 1: When the compressor operates, it operates by referencing the target temperature of both Circuit 1 and Circuit 2. When only Circuit 2 is thermo-on condition, the compressor still operates. Under certain conditions, it can happen that the temperature of Circuit 1 overshoots its target temperature. - Type 2 : When the compressor operates, it operates by referencing the target temperature of Circuit 1. When only Circuit 2 is thermo-on condition, the compressor is stopped.		Type1 / Type2	-	Type 2
	Room Heating	Air heating set temp	Min.	The User's setting range of room air target temperature in HEAT mode can be limited	O	16 ~ 22	°C	16
			Max.			24 ~ 30	°C	30
		Water heating set temp	Min.	The User's setting range of water target temperature in HEAT mode can be limited. At the same time, this is the limitation of temperature for all modes incl. AUTO mode! Set according to Underfloor heating manufacturer's documentation.	O	15 ~ 34	°C	15
			Max.			35 ~ 75	°C	65
	Room Cooling	Air cooling set temp	Min.	The User's setting range of room air target temperature in COOL mode can be limited	O	16 ~ 22	°C	16
			Max.			24 ~ 30	°C	30
		Water cooling set temp	Min.	The User's setting range of water target temperature in COOL mode can be limited At the same time, this is the limitation of temperature for all modes incl. AUTO mode! Set according to Underfloor heating manufacturer's documentation.	O	5 ~ 20	°C	10
			Max.			22 ~ 27	°C	24

Menu hierarchy & Setting					Explanation	Detailed explanation	Available Setting options (range)	Unit	Default
AUTO MODE	Seasonal auto temp	Mode			Definition if weather-dependency (Auto mode) is applied to heating and cooling or heating only.	O	Heating only / Heating & Cooling	-	Heating only
		Outdoor temperatures		O1	Graphic setting of outdoor temperature ranges for heating and cooling in Auto mode. 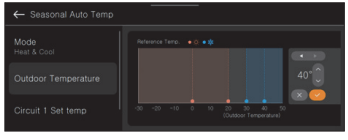		-25 ~ 35	°C	-10
				O2			-25 ~ 35	°C	18
				O3			10 ~ 46	°C	30
				O4			10 ~ 46	°C	40
		Target temperatures	Circuit 1	A1	Graphic setting of target temperatures in Heating/Cooling operation for Circuit 1 & 2. - If setting 'Configuration/Control method = Air', then targets for Room air are defined here. - If setting 'Configuration/Control method = Water or Water+Air', then targets for outlet or inlet temperature are expressed. 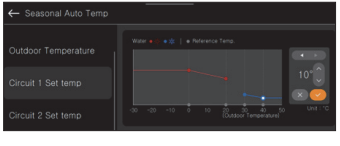		16 ~ 30	°C	21
				A2			16 ~ 30	°C	19
				A3			18 ~ 30	°C	21
				A4			18 ~ 30	°C	19
				W1			15 ~ 75	°C	50
				W2			15 ~ 75	°C	40
				W3			5 ~ 27	°C	12
				W4			5 ~ 27	°C	10
			Circuit 2	A1			16 ~ 30	°C	21
				A2			16 ~ 30	°C	19
				A3			18 ~ 30	°C	21
				A4			18 ~ 30	°C	19
				W1			15 ~ 75	°C	35
				W2			15 ~ 75	°C	28
				W3			5 ~ 27	°C	18
				W4			5 ~ 27	°C	16

Menu hierarchy & Setting				Explanation	Detailed explanation	Available Setting options (range)	Unit	Default
DOMESTIC HOT WATER	DHW temperature settings	DHW set temp range	Min.	Limitation of setting range (DHW temp. target that User can set) The setting range is limited, if no boost heater is installed.	O	30 ~ 40	°C	40
			Max.			50 ~ 80	°C	65
		Compressor cycle limit temp.	DHW	This is the max. DHW temp. that that can be reached by using compressor cycle only (without using electrical boost heater). It also depends on effectiveness of heat transfer from heat pump to DHW tank (size of coil, sensor positioning). Reducing the setting may lead to increased consumption of electricity.	O	40 ~ 65	°C	65
			ODU Air sensor	This sets the maximum outside temperature at which the compressor cycle will be used. After this outside temperature, the DHW will be heated only using electric heaters.		30 ~ 35	°C	35
		DHW hysteresis		Temperature gap between DHW target temp. (by User) and DHW temperature when re-heating starts. **Example:** Target temp. = 48°C DHW hysteresis = 5 K → DHW heating starts at 43°C	O	1 ~ 30	K	5
	Thermal disinfection 1		Disinfection active	Activation/Deactivation of anti-legionella operation. Electric heater must be connected and activated to perform this function.	O	Not use / Use	-	Not use
			Weekday	Weekday and time at which the anti-legionella function is executed.		Sun. / Mon. / Tue. / Wed. / Thu. / Fri. / Sat.	-	Fri
			Start time			0 ~ 23	hh:--	23:00
	Thermal disinfection 2		Max. Temp.	Target temp. for thermal disinfection cycle.		60 ~ 80	°C	70
			Duration	Duration how long disinfection target temp. is kept. After time has elapsed, target is reduced to normal setpoint.		5 ~ 60	min	10
			Forced end time	After this time has elapsed, thermal disinfection will stop - even is disinfection temp. is not reached.		1 ~ 12	hrs	1

Menu hierarchy & Setting			Explanation	Detailed explanation	Available Setting options (range)	Unit	Default
DOMESTIC HOT WATER	DHW heating duration	Active time	Duration how long DHW heating continues	O	5 ~ 95	min	30
		Stop time	Duration how long DHW heating is interrupted (if DHW target is not reached in one cycle)		0 ~ 600	min	30
	DHW electric re-heating	DHW heater usage	**- Use:** DHW will be re-heated electrically if the heat pump cycle does not reach the target temp. within time setting. **- Use disinfection**: Electric re-heating is only used for anti-legionella operation and in case of emergency. If 'Use disinfection' is chosen, the DHW temp. setting range is limited!	O	Use always / Use disinfection	-	Use always
		DHW heater delay time	After time has elapsed, the DHW boost heater is released.		10 / 20 / 30 / 40 / 50 / 60 / 90 / 120 / 1440	min	30
	DHW re-circulation	Enable re-circulation	Definition if DHW recirculation pump is connected or not. If it is used, a Schedule in the main menu becomes available to set the time frames for operating the pump.	O	Use / Not use	-	Not use
		On	Definition of recirculation pump cycling pattern during release schedule. By default, the pump operates every twenty minutes for 10 minutes (only during the set Schedule!)		5 ~ 60	min	10
		Off			5 ~ 60	min	20
SOLAR THERMAL SYSTEM	Solar collector operating range	Min.	Solar cycle will not start before collector has reached this temp.	O	5 ~ 50	°C	10
		Max.	Solar cycle will not start if collector exceeds this temp.		60 ~ 200	°C	135
	Solar tank temp. Limit	Max.	Solar cycle will not start, if DHW tank has reached its maximum temp.		20 ~ 90	°C	80

Menu hierarchy & Setting				Explanation	Detailed explanation	Available Setting options (range)	Unit	Default
SOLAR THERMAL SYSTEM	Solar thermal ΔT		Temp On	Delta temp. between Solar collector and DHW tank must be reached before solar pump starts. **Example:** Actual DHW temp. = 45 °C, Temp On = 8 K → Solar cycle start, if collector exceeds 53 °C	O	3 ~ 40	K	8
			Temp Off	Delta temp. between Solar collector and DHW tank must be undercut before solar cycle stops. **Example:** Actual DHW temp. = 45°C, Temp Off = 2K → Solar cycle stops, if collector undercuts 47°C		1 ~ 20	K	2
	Renewable DHW heating			The electrical DHW boost heater can be disabled, while solar cycle is in operation.		Enable / Disable	-	Enable
	Solar circuit flushing	Solar pump flush schedule	Control	Frequent activation of solar pump can be activated/deactivated. This function is recommended only if there are random shadows (tree, chimney..) covering the collector sensor. If solar cycle is out of operation, solar pump will start after this time has elapsed, in order to check the available solar temp. Duration should be as long as necessary, but as short as possible. If collector is cold, heat will be wasted "to the roof"!		On / Off	-	Off
			Start Hour	Within this time frame the Solar flushing function is enabled. Flushing is only reasonable during daytime.		0 ~ 23	hh:--	6:00
			Start Minute			0 ~ 59	--:mm	
			End Hour			0 ~ 23	hh:--	18:00
			End Minute			0 ~ 59	--:mm	
		Solar pump flush setting	Oper. Time	Duration how long the solar pump operates to flush the circuit		1 ~ 10	-	1
			Oper. Cycle	Duration until next flushing starts		30 ~ 120	-	60
	Solar pump test run			'Start' will activate the solar pump for 1 hour. During this period, the pump will be turned on and off intermittently to purge air from the cycle.		Start / Stop	-	-

Menu hierarchy & Setting			Explanation	Detailed explanation	Available Setting options (range)	Unit	Default
SERVICE	Pump test run		'Test run' will activate the Main pump for 1 hour. During this period, the pump will be turned on and off intermittently to purge air from the cycle. Based on setting 'Configuration/External pump', the External pump will be activated, too. The operation can be stopped by pushing the On/Off button on the Remote controller.	O	Test Run	-	-
	Frost Protection Temp.		By default, the frost protection is activated if any water temperature sensor measures a temperature below 4°C. The temperature might be reduced, if anti-freeze agent is added to the water circuit. However, this setting is only valid when the antifreeze short pin (CN_ANTI_SW) is removed and DIP switch SW1 - No.8 is turned on. Refer to detailed description in this manual.	O	4 / -1 / -6 / -11 / -16 / -21	K	-1
	Actuator test	Test mode	Before actuator outputs can be tested, the 'Test mode' must be turned on. While it is enabled, normal functions will be suppressed. Make sure that all electric wiring and piping work is executed correctly before starting the Test mode!. Only professional users should use this functionality! It is highly recommended to test only one output at a time. Other than the functions "Solar pump test run" and "Pump test run", the actuators are turned on continuously until the setting is changed to Off again.	O	On / Off	-	Off

Menu hierarchy & Setting				Explanation	Detailed explanation	Available Setting options (range)	Unit	Default
SERVICE	Actuator test	Pump test	A1 Main pump	In this Service menu, the actuators like pumps and valves can be activated to check for correct operation during commissioning. **Remark** : A6(Mixing valve open) and A7(mixing valve close) cannot be turned on at the same time		On / Off	-	-
			A2 External pump			On / Off	-	-
			A3 Mix pump			On / Off	-	-
			A4 Solar pump			On / Off	-	-
			A15 DHW Re-circulation pump			On / Off	-	-
		Valve test	A5 DHW 3-way-valve			DHW / Space	-	-
			A6 Mixing valve open			On / Off	-	-
			A7 Mixing valve close			On / Off	-	-
			A12 Cooling 2-way-valve			On / Off	-	-
	Monitoring	Sensor value	S9 Refrigerant gas	In this Service menu, all sensor values are displayed to easily recognize if all values are reasonable.		-	°C	-
			S10 Refrigerant liquid			-	°C	-
			S11 Entering water			-	°C	-
			S12 Leaving water			-	°C	-
			S13 Backup heater outlet			-	°C	-
			S14 DHW tank			-	°C	-
			S15 Solar collector			-	°C	-
			S16 Solar tank			-	°C	-
			S17 Water flow sensor			-	°C	-
			S18 Mixing circuit			-	°C	-
			S19 Water pressure			-	°C	-
			S21 Room temp. Direct circuit			-	°C	-
			S22 Room temp. Mixing circuit			-	°C	-
			S24 Wall-mounted air sensor			-	°C	-
			S25 Buffer tank sensor			-	°C	-

Menu hierarchy & Setting				Explanation	Detailed explanation	Available Setting options (range)	Unit	Default
SERVICE	Monitoring	Input status	SG1	In this Service menu, the status of all physical inputs are listed up **Remark** : If the input signal is normal, "1" is displayed, while there is no signal, "0" is displayed.		0 / 1	-	-
			SG2			0 / 1	-	-
			CN-EXT			0 / 1	-	-
			Antifreeze shortkey			0 / 1	-	-
			Thermostat (Heating)			0 / 1	-	-
			Thermostat (Cooling)			0 / 1	-	-
			Thermostat (DHW)			0 / 1	-	-
		Output status	A1 Main pump	In this Service menu, the status of all physical outputs are listed up **Remark** : Displays "1" if a signal is being sent, and "0" if there is no signal.		0 / 1	-	-
			A2 External pump			0 / 1	-	-
			A3 Mix pump			0 / 1	-	-
			A4 Solar pump			0 / 1	-	-
			A5 DHW 3-way-valve			DHW / Space	-	-
			A6 Mixing valve (Open)			0 / 1	-	-
			A7 Mixing valve (Close)			0 / 1	-	-
			A12 Cooling 2-way-valve			0 / 1	-	-
			A15 DHW Re-circulation pump			0 / 1	-	-
			A8 Backup heater (Step 1)			0 / 1	-	-
			A9 backup heater (Step 2)			0 / 1	-	-
			A16 Backup Heater (Step 3)			0 / 1	-	-
			A10 DHW Boost heater			0 / 1	-	-
			A11 External boiler			0 / 1	-	-

Menu hierarchy & Setting			Explanation	Detailed explanation	Available Setting options (range)	Unit	Default
SERVICE	Runtimes	Compressor (Total runtime)	The total runtimes are of main components re displayed. The information can be used to identify cause of excessive energy consumption or abnormal cycling of compressor.		-	h	-
		Compressor starts			-	-	-
		Compressor (Heat mode)			-	h	-
		Compressor (Cool mode)			-	h	-
		Compressor (DHW mode)			-	h	-
		Compressor (Defrosting)			-	h	-
		Backup heater (Step 1)			-	h	-
		Backup heater (Step 2)			-	h	-
		Boost heater			-	h	-
		Main pump			-	h	-
		Solar pump			-	h	-
	Runtimes reset	Comp. Reset	In this menu, runtimes can be reset.		Reset	-	-
		Backup heater Reset			Reset	-	-
		Boost Heater Reset			Reset	-	-
		Pump operation time			Reset	-	-
		Solar pump Reset			Reset	-	-

Menu hierarchy & Setting			Explanation	Detailed explanation	Available Setting options (range)	Unit	Default
CONNECTIVITY	Dry contact	Dry Contact Mode	- Manual: Unit must be turned-on by Remote controller after release by Dry contact - Auto: Unit will automatically start (return to previous operation) after release by Dry contact		Auto / Manual	-	Auto
		CN_CC	- D/C Automatic : Unit will recognize connected Dry contact after power-on - D/C Not Installed: Dry contact is not installed - D/C Installed: Dry contact is installed and unit always checks its state Additionally, check setting for 'Dry contact mode'!		- D/C Automatic - D/C Not Installed - D/C Installed	-	D/C Automatic
	Central control address(HEX)		Address setting if LG Central controller is connected		00 ~ FF	hexadec.	00
	Modbus address(HEX)		Address setting if heat pump is controlled via Modbus by 3rd-party controller **Remark :** To use this function, switch No.1 of DIP switch SW 1 must be turned ON.	O	01 ~ FF	hexadec.	21
	CN_EXT		- Not use: CN_EXT is not used - Simple operation: Open= Operation off Closed= Operation On - Simple dry contact: Open= Operation Off with dry contact lock Closed= lock released, operation on/off depends on setting 'Dry contact mode' - Single emergency stop: Open= Emergency stop with forced lock Closed= Forced lock released	O	Not use / Simple Operation / Simple dry contact / Single emergency stop	-	Not use

Menu hierarchy & Setting			Explanation	Detailed explanation	Available Setting options (range)	Unit	Default
CONNECTIVITY	3rd party boiler	Mode	Boiler can be activated either manually (by User setting) or automatically (below certain outdoor temp.) - **Manual:** The Boiler is (de-)activated manually (by User setting) If the boiler is activated, the heat pump is switched off. - **Biv-alternative:** Automatic switch-over between heat pump and boiler. Below Bivalent temperature, the heat pump is turned off. - **Biv-parallel:** Automatic release of boiler. Below Bivalent temp., the heat pump is still in operation. The boiler is activated additionally, if the heat pump alone cannot meet the target temp. within reasonable time.	O	Manual / Biv-alternative/ Biv-parallel	-	Manual
		Temp.	Boiler will be activated, if outdoor temp. undercuts this value. Heat pump will stop.		-25 ~ 25	°C	-7
		Hysteresis	Boiler will be de-activated and heat pump re-activated, if outddor temp. exceeds temp. setting plus hysteresis. **Example:** 'Temp.' = -7 °C, 'Hysteresis' = 4K → Boiler is enabled at -7 °C and disabled at -3 °C outdoor temp.		2 ~ 10	K	4
	Boiler 3Way Valve		Setting 3 way valve direction when operating the boiler.		DHW / Heating	-	DHW

Menu hierarchy & Setting				Explanation	Detailed explanation	Available Setting options (range)	Unit	Default
CONNECTIVITY	Boiler Control By Room Temp.			If the heat pump is active, the output TB_EXT BOILER is always off. While the boiler is enabled, there are two options: - Not use: Output is continuously On. - Use: Output TB_EXT BOILER is switched on/off based on Room temperature state. - Remark : Disabled in Biv-paralle mode.		Not use / Use	-	Not use
	Meter Interface	Modbus address		- Not use : Meter interface is not connected - B0 : Meter interface is connected (address 1) DIP SW_01M @ PENKTH000 = Off - B1 : Meter interface is connected (address 2) DIP SW_01M @ PENKTH000 = On		Not use / B0 / B1	-	Not use
		Unit	Port 1: Pulse/kWh	Spec of wattmeter at Port 1 (Power consumption heat pump)		0.1 ~ 9999.9	pulse/kWh	0000.0
			Port 2: Pulse/kWh	Spec of wattmeter at Port 2 (Power consumption backup heater)		0.1 ~ 9999.9	pulse/kWh	0000.0
			Port 3: Pulse/kWh	Spec of wattmeter at Port 3 (Power consumption DHW boost heater)		0.1 ~ 9999.9	pulse/kWh	0000.0
			Port 4: Pulse/kWh	Spec of heat meter at port 4 (Heat produced by heat pump + backup heater)		0.1 ~ 9999.9	pulse/kWh	0000.0
	Energy state	Connection		Select the usage of the Energy State for Home Energy Management Systems.		LG ESS / SG Ready	-	SG Ready
		Signal type		Set the type of signal connection to be connected to external devices. *ThinQ is only available for LG ESS connection.	O	Not use / 230V inputs / Modbus / ThinQ (Only available for LG ESS)	-	Not use

Menu hierarchy & Setting				Explanation	Detailed explanation	Available Setting options (range)	Unit	Default
CONNECTIVITY	Energy state	Energy state definition	Energy state 5	Setting whether Energy state 5 is used or not.	O	Not use / Use		
			Energy state 5 - Heat temp.	Definition how much Heating target temp. shall increase when Energy state 5 is applied.		0 ~ 30	K	5
			Energy state 5 - Cool temp.	Definition how much Cooling target temp. shall decrease when Energy state 5 is applied.		0 ~ -30	K	-5
			Energy state 5 - DHW temp.	Definition how much DHW target temp. shall increase when Energy state 5 is applied.		0 ~ 50	K	30
			Energy state 6	Setting whether Energy state 6 is used or not.		Not use / Use		
			Energy state 6 - Heat temp.	Definition how much Heating target temp. shall increase when Energy State 6 is applied.		0 ~ 30	K	2
			Energy state 6 - Cool temp.	Definition how much Cooling target temp. shall decrease when Energy state 6 is applied.		0 ~ -30	K	-2
			Energy state 6 - DHW temp.	Definition how much DHW target temp. shall increase when Energy state 6 is applied.		0 ~ 50	K	10
			Energy state 7	Setting whether Energy state 7 is used or not.		Not use / Use		
			Energy state 7 - Heat temp.	Definition how much Heating target temp. shall increase when Energy State 7 is applied.		0 ~ 30	K	-2
			Energy state 7 - Cool temp.	Definition how much Cooling target temp. shall decrease when Energy State 7 is applied.		0 ~ -30	K	2
			Energy state 7 - DHW temp.	Definition how much DHW target temp. shall increase when Energy State 7 is applied.		0 ~ 50	K	0

Menu hierarchy & Setting				Explanation	Detailed explanation	Available Setting options (range)	Unit	Default
CONNECTIVITY	Energy state	Energy state definition	Energy state 8	Setting whether Energy state 8 is used or not.	O	Not use / Use		
			Energy state 8 - Heat temp.	Definition how much Heating target temp. shall increase when Energy State 8 is applied.		0 ~ 30	K	-5
			Energy state 8 - Cool temp.	Definition how much Cooling target temp. shall decrease when Energy State 8 is applied.		0 ~ -30	K	5
			Energy state 8 - DHW temp.	Definition how much DHW target temp. shall increase when Energy State 8 is applied.		0 ~ 50	K	0
		Digital inputs assignment	State 3 (0:1)	Definition of Energy state 3: - 3 : Cooling/no effect, Heating/Target +2K, DHW/Target +5K - 4 : Cooling/no effect, Heating/no effect, DHW/Target=80°C - 5~8 : According setting "Energy state definition"	O	3 ~ 8	-	3
			State 4 (1:1)	Definition of Energy state 4: - 3 : Cooling/no effect, Heating/Target +2K, DHW/Target +5K - 4 : Cooling/no effect, Heating/no effect, DHW/Target = 80 °C - 5~8 : According setting "Energy state definition" *When SG Ready is connected via Digital input, State 4 (1:1) is in the Power Limitation state and the setting is disabled.		3 ~ 8	-	4
		Power Limitation setting	Limit	Active only when SG Ready establishes a connection via digital input. The power limitation setting can be set from 0.1 kW to 25.0 kW.	O	0.1 ~ 25.0	kW	4.2
	Thermostat control type			Setting what type of thermostat is connected		- Heat & Cool - Heat & Cool/DHW - DHW only	-	Heat & Cool

Installer settings in detail

This chapter provides extended explanations for some of the settings.

Configuration - Control method

Water

The Inverter cycle is controlled based on target water temperature and actual (inlet or outlet) water temperature.
It is possible to combine this control method with a third-party room air temperature thermostat!
Weather-dependent (Auto mode) or Fixed target (Heat/Cool mode) are possible.

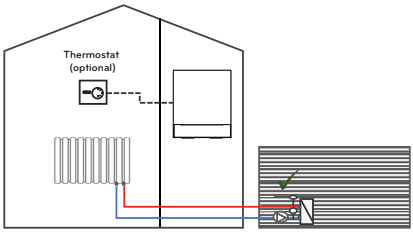

Air

If this control method is chosen, LG room air temperature sensor(s) or LG remote controller must be placed inside reference room(s).

The Inverter cycle will be controlled directly by using room air temperature target and actual room temperature.

While heat transfer from heat pump cycle to water to air is subject to time, this control method may lead to overshooting of temperature and higher energy consumption. It is only feasible to use in case of simple installations with just a few rooms.

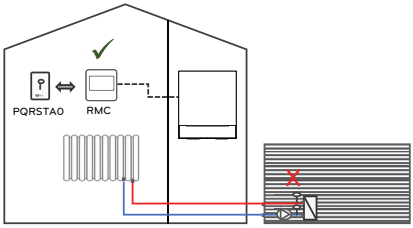

Air+Water

The Inverter cycle is controlled based on target water temperature and actual (inlet or outlet) water temperature. Additionally, LG room air temperature sensor is installed or the remote controller is placed in a reference room to operate as a room thermostat. Whenever the room temperature drops below room temperature setpoint, the heat pump cycle starts and targets the set water temperature.

Weather-dependent (Auto mode) or Fixed target (Heat/Cool mode) are possible.

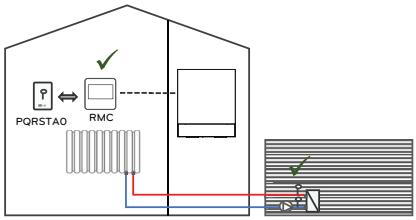

Configuration - Select room devices

In this menu, it is possible to flexibly define the devices used to control room air temperature. The possible options depend on setting 'Control method'. The devices must be placed in suitable reference rooms. Refer to chapter 'Accessories installation'.

If LG room sensors are used, the sensor controlling Circuit 1 (Direct circuit) must be connected to CN_ROOM1 and the sensor controlling Circuit 2 (Mixing circuit) to CN_ROOM2.

Alternatively, a separate Deluxe remote controller can be connected to CN_REMO_B and used to control Circuit 2 (Mixing circuit). [Example 2]

If third-party thermostats are used, the thermostat-input and/or a Dry contact can be used for connection to the heat pump.

NOTE

With this model it is not possible to use a Remote controller for controlling Circuit 1.
When setting 'Air' or 'Air+Water', be sure to refer to the examples and install accessories or RMC. Failure to do so may result in inaccuracies.

Example 1)

Configuration - Control method: Air+Water
Configuration - Select room devices - RMC linked to: Circuit1&2
Configuration - Select room devices - Circuit 1 - Room air sensor option: Room Sensor
Configuration - Select room devices - Circuit 2 - Room air sensor option: Room Sensor

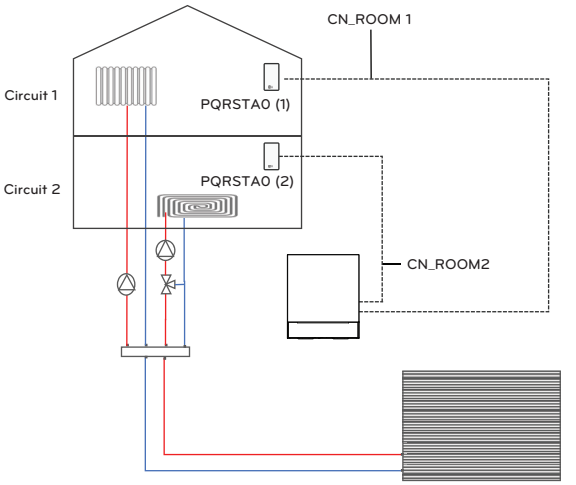

Example 2)

- RMC(B) is used to control both levels (upstairs/radiators & downstairs/underfloor heating) including Installer settings.
  This Remote controller is also used to sense the room temperature of the ground floor (Mixing circuit).

Settings on RMC(B):

Configuration - Control method: Air+Water
Configuration - Select room devices - HMI linked to Circuit 1, RMC linked to Circuit 2
Configuration - Select room devices - Circuit 1 - Room air sensor option: Room Sensor
Configuration - Select room devices - Circuit 2 - Room air sensor option: Remote controller

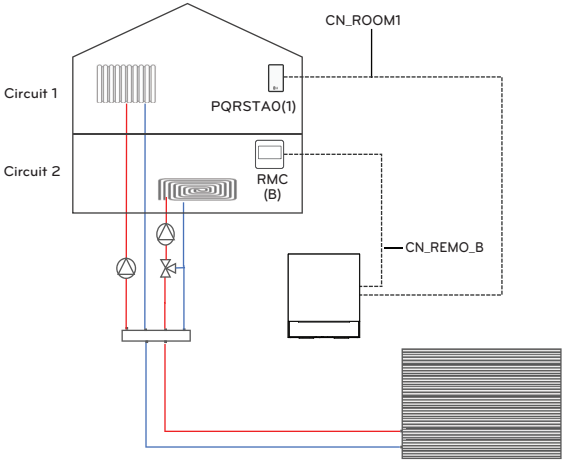

Example 3)

Configuration - Control method: Water
Configuration - Select room devices - RMC linked to: Circuit1&2
Configuration - Select room devices - Circuit 1 - Digital input - CN-THMO
Configuration - Select room devices - Circuit 2 - Digital input - CN-CC

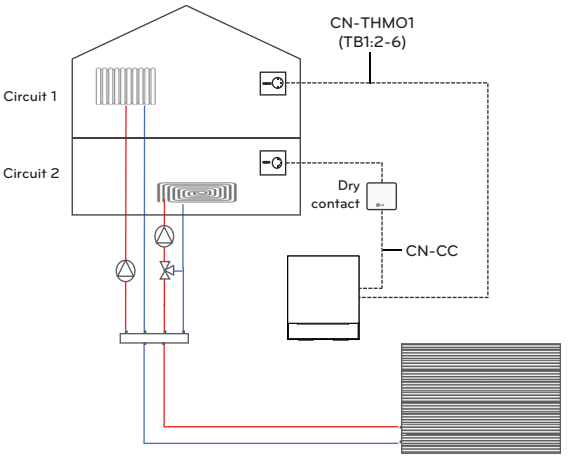

NOTE

In this setup, Mode-change is only possible through Thermostat-inputs at Indoor unit (and by using the Remote controller).
The thermostat connected via Dry contact shall be used only for give thermo-on/off signal.

Configuration - External Pump

This function can be set to control the external water pump. Three options are possible, related to the location of the pump.

Use

In case of long piping, the External pump is used to overcome high pressure losses or as secondary pump in combination with a parallel buffer tank. With this setting, the pump always operates in parallel to internal pump.

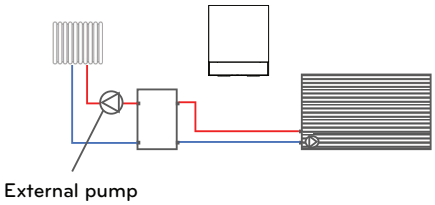

Heating/Cooling

In case of long piping, the External pump is used to overcome high pressure losses. The pump is installed downstream of DHW connection. With this setting, the pump operates in parallel to internal pump during space heating and cooling mode. While the DHW tank is charged, the External pump remains off.

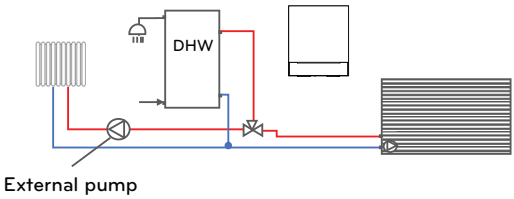

Circuit1

If Mixing circuit is configured, the External pump can be used to serve the direct circuit (Circuit1), while the Mix pump serves Circuit2. In this setting, the External pump operates according to thermo-on/off state of Circuit1.

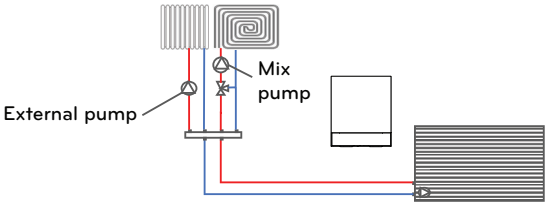

Configuration - Boiler output

This setting must be adjusted based on the system layout.

Layout 1

Boiler output = Heat & DHW

DHW by heat pump activated (⟶ DIP switch SW2/2&3)

Both, heat pump and boiler can be used for space heating and DHW heating. If the Bivalent temperature is reached, the boiler takes over completely and the heat pump is turned off.

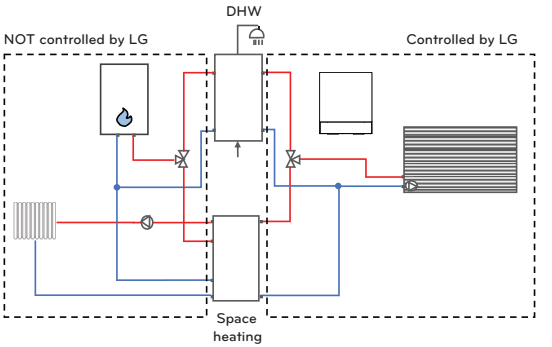

Layout 2

Boiler output = Heating only

DHW by heat pump activated (⟶ DIP switch SW2/2&3)

The boiler is connected to the space heating circuit only. The heat pump is used for DHW heating even below Bivalent temperature.

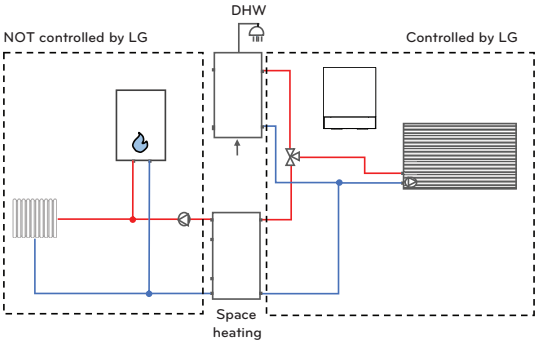

Layout 3

Boiler output= Heating only

DHW by heat pump deactivated (⟶ DIP switch SW2/2&3)

The boiler is connected to the space heating circuit and covers the DHW demand throughout the year. The heat pump is used for space heating above Bivalent temperature only.

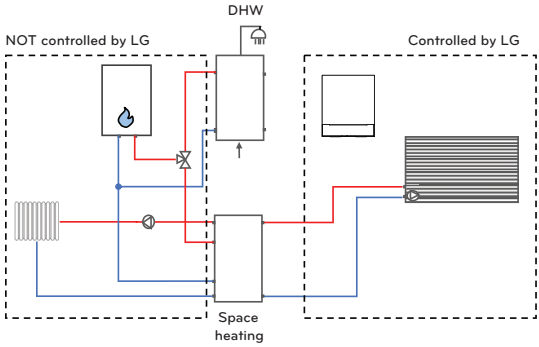

NOTE

In any case, the boiler is not controlled actively. Only it is released and then must operate according its own controls. The External pump output should not be used for the secondary pump, because it will be deactivated, when the heat pump is not in operation!

Configuration - Select outdoor air sensor

Setting defines if the pre-installed air sensor (mounted at grille of outdoor unit) or a dedicated outside sensor (wall-mounted / accessory) is used for weather-dependent operation (Auto mode). It is highly recommended to use wall-mounted sensor – especially when the outdoor unit is exposed to sunlight.

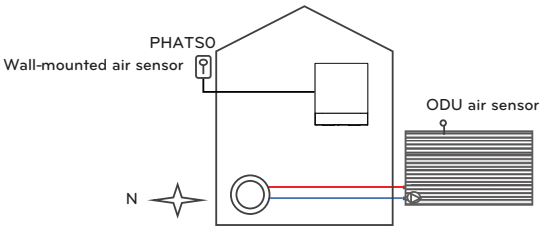

NOTE

Even if wall-mounted sensor is used, the sensor at outdoor unit must NOT be dis-connected, as it is still used to control the refrigerant cycle!
To select 'Wall-mounted air sensor', a dedicated accessory (PHATS0) is required (available from 04/2024).

Configuration - RMC master/slave

An additional Remote controller can be used to operate as Room unit with limited access.
Only User settings and monitoring functions are available on the Slave controller.
On the monitoring screen, the controller is indicated with ''S''. It is possible to use the Slave controller to sense the room temperature if needed.

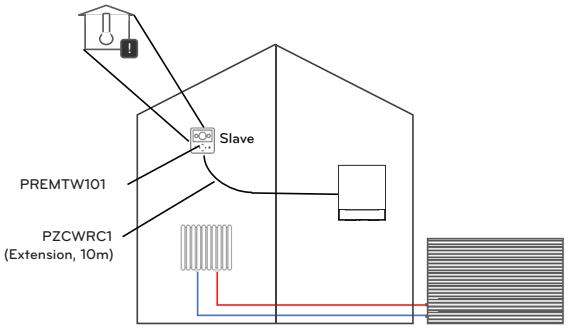

General - Water Flow Control

This setting defines how the integrated water circulation pump is controlled.
Select the desired method to control the pump and set the target value if needed.

- Pump Capacity: The pump operates with the capacity set (10~100 %)
- Fixed Flow Rate: The water pump is automatically controlled to maintain the set flow rate. Individual settings for Heating, Cooling and DHW heating are possible.
- Fixed ΔT: Set the target ΔT (*ΔT = temperature difference between inlet and outlet water temperature). The water pump is automatically controlled to maintain the set ΔT. Individual settings for Heating, Cooling and DHW heating are possible. For radiators the ΔT is typically ~10 K, for Fan coil units ~8 K and for Underfloor heating system ~5 K are common.
- Optimal Flow Rate: The water pump is automatically controlled at the optimum flow rate required according to current temperature settings.

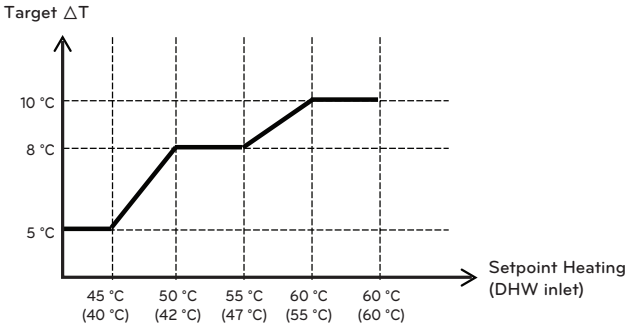

Remark: In Cooling mode, Target ΔT is fixed at 5 K.

NOTE

The flow rate has a strong impact on the efficiency of the system and also may lead to errors (CH 14) and flow noise.
The settings should be adjusted only by professional users.

General - Anti-freezing option

This setting defines the level of frost protection, when the Remote control is turned off.

Setting	Detection	Case	Operation
Type1	Outside air temp. + Outlet water temp.	Outside temp. < 0 °C AND Outlet water temp. ≤ 20 °C	Pump always ON
		Outside temp. ≥ 0 °C AND Outlet water temp. > 20 °C	Pump always OFF
		Except for above two cases	Pump intermittently ON
Type2	Outside air temp.	Outside temp. < 9 °C	Pump intermittently On
		Outside temp. ≥ 9 °C	Pump always OFF

⚠ CAUTION

If the setting is changed to ‚Type2' there is an increased risk of freezing!

General - Backup heater release temp.

Depending on local climate conditions, it is necessary to change the temperature condition in which backup heater is released. The backup heater operates in 'Bivalent-parallel' to heat pump cycle. It means, below the set outside temperature is released, but it will only run if the target temperature is not reached by cycle.

NOTE

DIP switches SW2-6/7 are defined according to the Backup heater being installed. The capacity of the heater can be set from the remote controller (HMI)

1) TOL = -28 °C (R290 Mono)
2) Heating design temp. (Seasonal auto temp/Outdoor temp/O1)
3) General/Backup heater release temp
4) No heating temp. (Seasonal auto temp/Outdoor temp/O2)

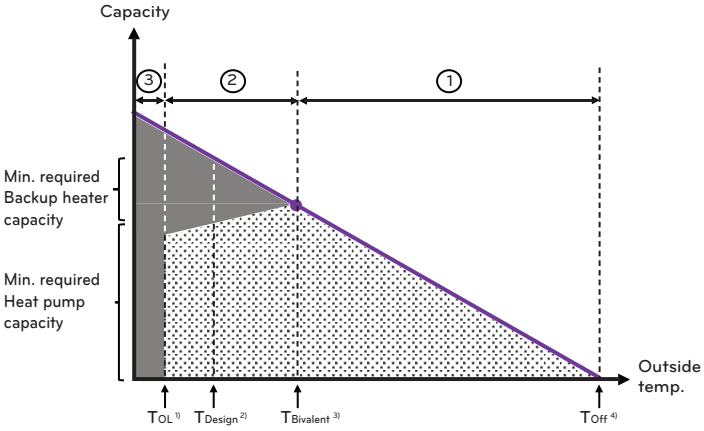

①	Heat pump only
②	Heat pump+ Backup heater support
③	Backup heater only (Emergency operation)

General - Screed drying

This function is used to increase the temperature of a newly installed underfloor heating system. It prevents that the cement is heated too fast and breaks. After activation, the main screen displays „Screed drying“ and the step in progress at the bottom of the screen.

- Step: By default the program starts with Step1. If screed drying was interrupted, it is possible to commence from any other step.
- Max. temp.: Defines the peak temperature.
- Step 8 Holding: Defines the time how long the Max. temperature is kept.

	Step										
	1	2	3	4	5	6	7	8	9	10	11
Outlet temp. in °C	25	Max. temp.	Off	25	35	45	Max. temp.	Max. temp.	45	35	25
Duration in hours	72	96	72	24	24	24	24	Holding time	72	72	72

⚠ CAUTION

The set Max. temp. must align with the specification provided by manufacturer of the underfloor heating!

NOTE

- If the upper limit setting value of the heating LW temperature is 55 °C or lower, it is set to 55 °C forcibly. If the lower limit setting value of the heating LW temperature is 25 °C or higher, it is set to 25 °C forcibly.
- During Screed drying operation, button input - except for installer functions - and temperature display is restricted.
- When the power is applied again after a power outage during product operation, the product operation state before power failure is remembered and the product is automatically operated.
- Screed drying operation stops when an error occurs. When error is cleared, screed drying program re-starts. (However, if the wired remote control is reset to the error occurrence state, it is compensated in the unit of one day)
- Upon releasing after an error, Screed drying operation may take up to 1 minute of waiting time after boot up. (The Screed drying operation status is judged as 1 minute cycle.)
- During Screed drying operation, Silent mode, DHW heating, Solar thermal heating is set to Off!
- During Screed drying operation, timers and reservations are not executed!
- After all steps are completed, set the function to 'Off'!

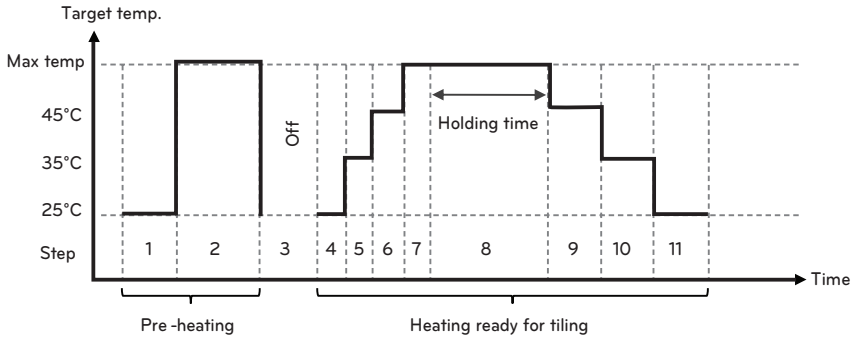

General - Buffer tank hysteresis

If a big buffer tank is connected in parallel to the heat pump, a separate sensor can be connected to PCB-connector TB_SENSOR/BUFFER sensing the temperature at the top of the tank or at its outlet pipe.

Consequently, the desired target water temperature (as set by User or defined by weather-dependent function) is compared to the buffer tank temperature.

Basically, it supports the same set temperature range and cycle operation as the regular water temperature control function. In addition, a dedicated hysteresis can be set - separate from existing air or water temperature control hysteresis.

The buffer tank hysteresis is 0 to 20 K (default 2 K), if the desired target temperature is set to 50 °C, Thermo-on temp. will be 48 °C and Thermo-off temp. will be 52 °C.

Heating only

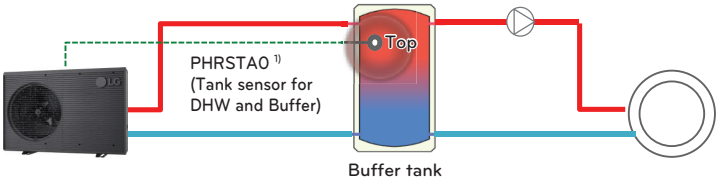

Heating & Cooling

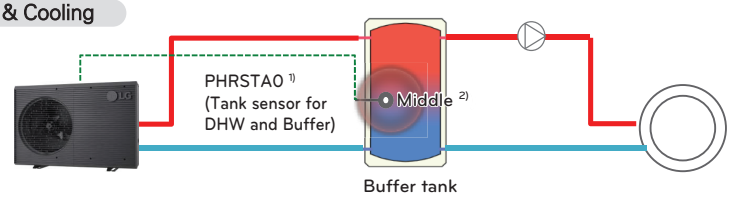

NOTE

1) To use this function, a dedicated accessory (PHRSTA0) is required.

2) In case of cooling operation, it should be positioned at the bottom, but when used for both heating and cooling, the middle position is recommended.

Circuit 1(2) - Room heating - Air heating set temperature

- This setting limits the air temperature range applied to Heating operation that the User can set manually in the Remote controller
  (Control method=Air or Air+Water; Mode=HEAT)

Circuit 1(2) - Room heating - Water heating set temperature

- This setting limits the water temperature range applied to Heating operation that the User can set manually in the Remote controller
  (Control method=Water; Mode=HEAT)

Circuit 1(2) - Room cooling - Air cooling set temperature

- This setting limits the air temperature range applied to Heating operation that the User can set manually in the Remote controller
  (Control method=Air or Air+Water; Mode=COOL)

Circuit 1(2) - Room cooling - Water cooling set temperature

- This setting limits the water temperature range applied to Cooling operation that the User can set manually in the Remote controller.
  (Control method=Water; Mode=COOL)

NOTE

- If underfloor system is used for cooling, it is very important to keep leaving water temperature higher than 16 °C. Otherwise, dew condensation can occur on the floor.
- In case of humid environment, do not set leaving water temperature below 18 °C.
- Do not use radiators for cooling! If cold water enters the radiators, dew will appear on the surface of the radiator.
- If Fan coil units (FCU) are used, it is possible to cool the water down to 5 °C.
- If FCU are used together with other types of emitters , the 2way-valve should be installed to block circuits not suitable for cold water.

Auto mode - Seasonal auto temp.

If mode is set to Auto, the target temperature is adapted to outside air temperature.

This way of control is much more energy efficient than heating(cooling) mode with fixed target temperature. If 'Mode' is set to 'Heating & Cooling', it is possible to define outdoor temperatures at which the unit switch-over from Heating to Off to Cooling and vice versa.

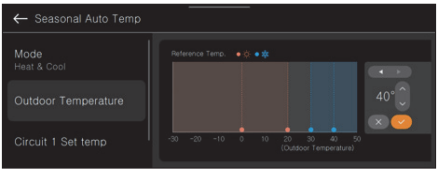

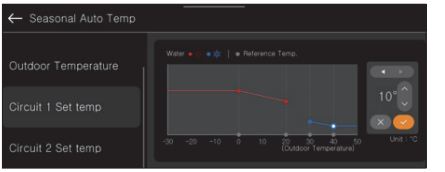

Setting	Description	Control method	Range	Default		Boundary
				Circuit 1	Circuit 2	
O1	Heating design temp.	all	-25 ~ 35 °C	-10 °C	-10 °C	O1 ≤ O2 -1
O2	Heating limit temp.			18 °C	18 °C	O2 ≥ O1 +1 O2 ≤ O3 -5
O3	Enable cooling		10 ~ 46 °C	30 °C	30 °C	O3 ≥ O2 +5 O3 ≤ O4 -1
O4	Cooling design temp.			40 °C	40 °C	O4 ≥ O3 +1
W1	High temp. (Heating)	Water / Water + Air	15 [1] ~ 75 [2] °C	50 °C	35 °C	W1 ≥ W2
W2	Low temp. (Heating)			40 °C	28 °C	W2 ≤ W1
W3	High temp. (Cooling)		5 ~ 27 °C	12 °C	18 °C	W3 ≥ W4
W4	Low temp. (Cooling)			10 °C	16 °C	W4 ≤ W3
A1	High temp. (Heating)	Air	16 ~ 30 °C	21 °C	21 °C	A1 ≥ A2
A2	Low temp. (Heating)			19 °C	19 °C	A2 ≤ A1
A3	High temp. (Cooling)		18 ~ 30 °C	21 °C	21 °C	A3 ≥ A4
A4	Low temp. (Cooling)			19 °C	19 °C	A4 ≤ A3

1) Without Backup heater, the lowest outlet water temp. is 25 °C.

2) If Control method is set to 'Outlet' water temperature control, the maximum setpoint in heating is 75 °C.

※ Range is limited by settings in menu 'Circuit 1(2) / Room cooling / Water cooling set temp.' In case of 'Inlet water control', the minimum setpoint is 5 degrees higher compared to 'Outlet water temp. control'.

Domestic hot water - DHW temperature settings

The DHW target temperature is set in Main screen by User. ‘DHW set temp range’ will limit the setting range. The type and volume of the tank, as well as the consumption should be taken into account.

Case 1: ‘DHW target temp.’ set lower than ‘Compressor cycle limit temp.’

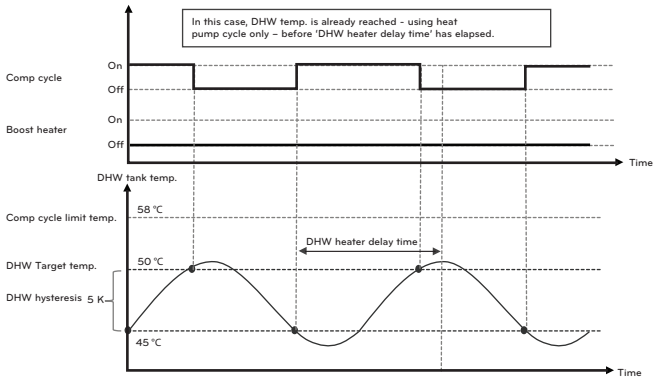

Case 2: ‘DHW target temp.’ set higher than ‘Compressor cycle limit temp.’

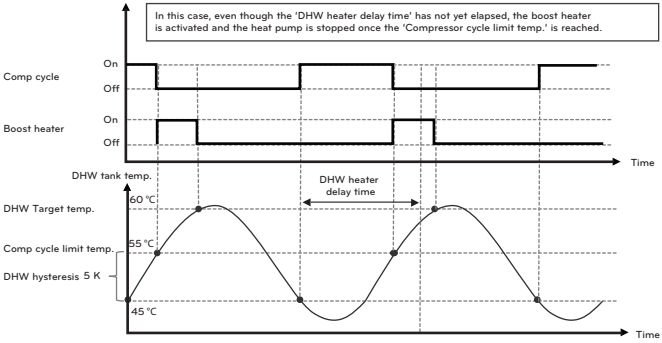

NOTE

If ‘DHW target temp.’ is higher than ‘Comp. cycle limit temp.’ (Case 2), the Cycle limit temp. will be used as reference for ‘DHW hysteresis’!

Set ‘DHW target temp.’ as low as possible (with respect to required comfort level) and ‘Compressor cycle limit temp.’ as high as possible (as long as no error appears).

Domestic hot water - Thermal disinfection

This function can help to prevent legionella bacteria from growing. It is recommended to activate the function if the DHW is not consumed on a regular base.

In order to kill the bacteria, a temperature of 70 °C or higher is recommended. For this purpose it is necessary to install and activate an electric boost heater.

During Thermal disinfection, the target hot water temp. is increased for a certain period of time.

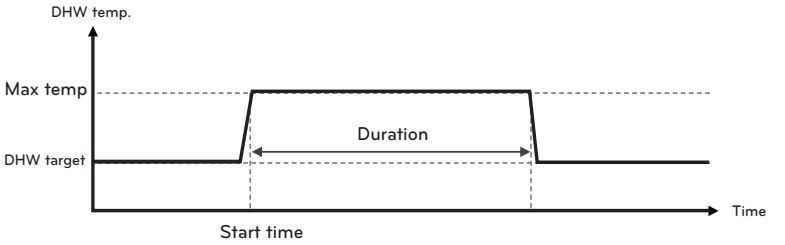

Domestic hot water - DHW heating duration
Domestic hot water - DHW electric re-heating

The following settings can be used to limit the duration of DHW heating and DHW boost heater:

- Domestic hot water - DHW heating duration - Active time:
  Maximum time how long DHW heating by heat pump cycle is activated, until operation mode returns to space heating
- Domestic hot water - DHW heating duration - Stop time:
  After DHW heating by heat pump cycle has stopped, it won't commence before 'Stop time' time has elapsed. The Boost heater might be used.
- Domestic hot water - DHW electric re-heating - DHW heater delay time:
  Time gap between start of DHW heating by cycle and release of DHW boost heater.

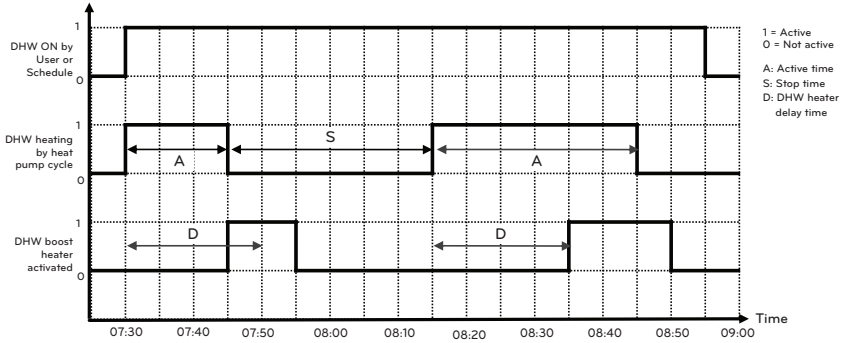

Time	Event
7:30	The User activates the DHW function in the Remote controller. DHW heating starts by using the heat pump cycle, as thermo-on condition is reached.
7:45	The DHW boost heater is activated, even though the 'DHW boost heater delay time' has not yet ended. This is because the DHW temp. reached the 'Compressor cycle limit temp.' The compressor cycle turns off to prevent High-pressure error. The 'Active time' immediately ends and 'Stop time' counter starts.
7:50	The 'DHW heater delay time' (20 min) ends, but it has no effect, because the heater is already operating.
7:55	After reaching the DHW set point, DHW heating stops.
8:10	The DHW temperature has dropped below set point again, but the DHW heating is not started due to 'Stop time' (30 min).
8:15	After end of 'Stop time', DHW heating commences using the heat pump cycle only, because the DHW temp. is lower than 'Compressor cycle limit temp.'
8:35	The DHW boost heater is enabled, after boost heater delay time. The heater starts, because DHW target temp. is not reached. The Compressor cycle remains active, because DHW temp. is still lower than 'Compressor cycle limit temp.'
8:45	After end of 'Active time', the heat pump cycle stops. DHW heating commences using the Boost heater only.
8:50	The DHW target temperature is reached. The heater stops.
8:55	The User turns off DHW heating in the Remote controller.

Domestic hot water - DHW re-circulation

In this menu, the recirculation pump can be activated and the pattern of operation is defined.

NOTE

Operation times of the Recirculation pump should be limited to times when comfort is really needed. If the pump is released for long time, energy consumption may increase a lot due to heat dissipation into the building and need to re-heat the hot water tank!

Example)

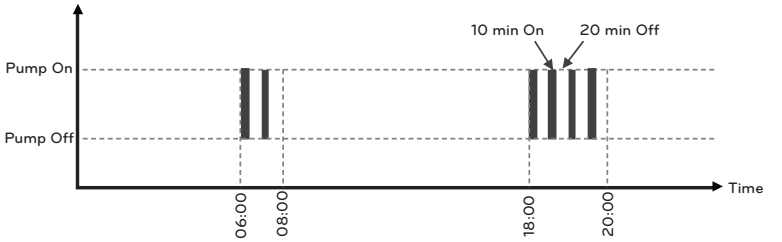

Installer level

Setting - Domestic hot water - DHW re-circulation - Enable re-circulation = Use
Setting - Domestic hot water - DHW re-circulation - On = 10 min
Setting - Domestic hot water - DHW re-circulation - Off = 20 min

NOTE

A schedule (accessible via Main screen) becomes available, after 'Enable recirculation' is set to 'Use'.

User level

1. Schedule - DHW Recirculation - Usage = Use
   Schedule - DHW Recirculation - Time = 06:00 ~ 07:00
   Schedule - DHW Recirculation - Day = Everyday
2. Schedule - DHW Recirculation - Usage = Use
   Schedule - DHW Recirculation - Time = 18:00 ~ 20:00
   Schedule - DHW Recirculation - Day = Everyday

NOTE

If you set the start time before the current time, the pump will be activated tomorrow at the set time.

Example: If you set times as above and it is 19:00 now, the pump will be activated tomorrow at 06:00 for the first time!

Solar thermal system - Solar collector operating range
Solar thermal system - Solar tank temp. limit
Solar thermal system - Solar thermal dT

Basically, the Solar pump starts if the Collector temperature (TB_SENSOR/SOLAR) is higher than the temperature at bottom part of the DHW tank (CN_TH4/WATER TANK SENSOR(B)). By default, the pump starts when the collector is 8 degrees warmer and stops when it is only 2 degrees warmer. This is because some heat losses can be expected on the way from roof to the technical room.

Additionally, the pump is turned off, when either the collector or the tank reaches it's maximum temperature. The values can be adjusted based on local conditions.

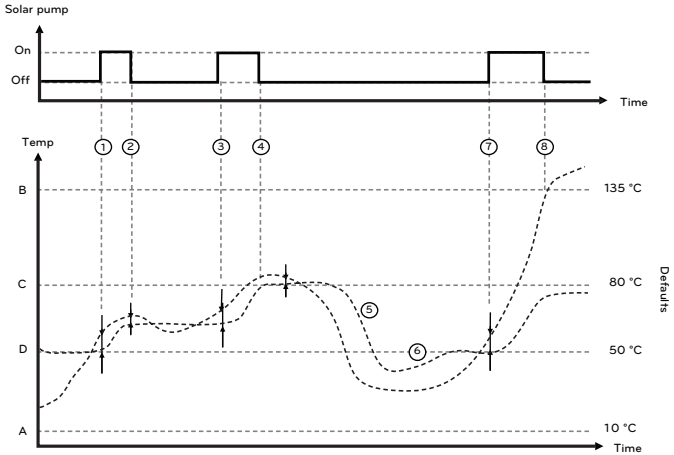

A) Solar thermal system - Solar collector operating range - Min
B) Solar thermal system - Solar collector operating range - Max
C) Solar thermal system - Solar tank temp limit - Max
D) DHW target temperature (User setting)

No	Event
1	Solar pump starts, because Collector temp. is eight degrees warmer than the tank
2	Solar pump stops, because Collector temp. is only two degrees warmer.
3	After cloudy period, the Collector temp. rises again. Solar pump starts, because Collector temp. is again eight degrees warmer than the tank.
4	The collector is still five degrees warmer, but the pump stops, because the tank has reached its maximum temperature of 80°C.
5	In the evening, the tank temperature drops due to consumption.
6	The heat pump re-heats the DHW tank up to its setpoint of 50°C, as the collector is not hot enough.
7	The next morning, the Solar pump starts, because Collector temp. is eight degrees warmer than the tank.
8	The collector has reached its maximum temperature of 135°C. The pump stops. The solar fluid inside of the collector evaporates and pushes the liquid into the pipeworks. The Solar system is at standstill.

Service - Pump test run

'Test run' will activate the Main pump for 1 hour. During this period, the pump will be turned on and off intermittently to purge air from the cycle.
Based on setting 'Configuration/External pump', the External pump will be activated, too.
The operation can be stopped by pushing the On/Off button on the Remote controller.

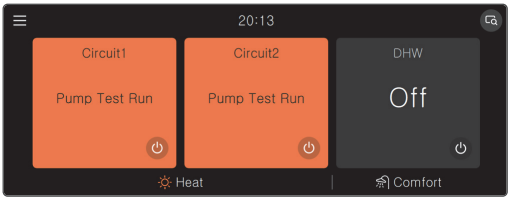

NOTE

The settings for Dry contact should be disabled to use the Pump test run function.
Connectivity - Dry contact - CN-CC = D/C Not installed
Connectivity - CN_EXT = Not use
After finishing the Test run, make sure to change back to previous settings.

Service - Actuator test - Test mode
Service - Actuator test - Pump test
Service - Actuator test - Valve test

These functions allow direct activation and de-activation of individual pumps and valves to check correct wiring and hydronic connection.

NOTE

The settings for Dry contact should be disabled to use the Actuator test function.
Connectivity - Dry contact - CN-CC = D/C Not installed
Connectivity - CN_EXT = Not use
After finishing the Actuator test, make sure to change back to previous settings.

Service - Frost protection temperature

A frost protection function prevents freeze up of water pipes. If any pipe sensor measures a temperature below 4°C (Default), the water pump and backup heater are turned on.

Defrosting operation is blocked if the leaving water temperature drops below 4 °C (Default) and it won't start until a temperature of 15 °C (Default) is reached.

If anti-freeze (glycol) is added to the water, the permitted temperature level can be as low as -1 °C(lowered by 5 degrees) down to -21 °C (lowered by 25 degrees).

All related temperatures will be shifted in the same way. For example, if 'Frost Protection Temp.' is selected as -1 °C, all temperatures that are the basis for judging frost protection are shifted by 5 degrees, too.

Consequently, the frost protection will be cancelled at a water temperature of 10 °C instead of 15 °C.

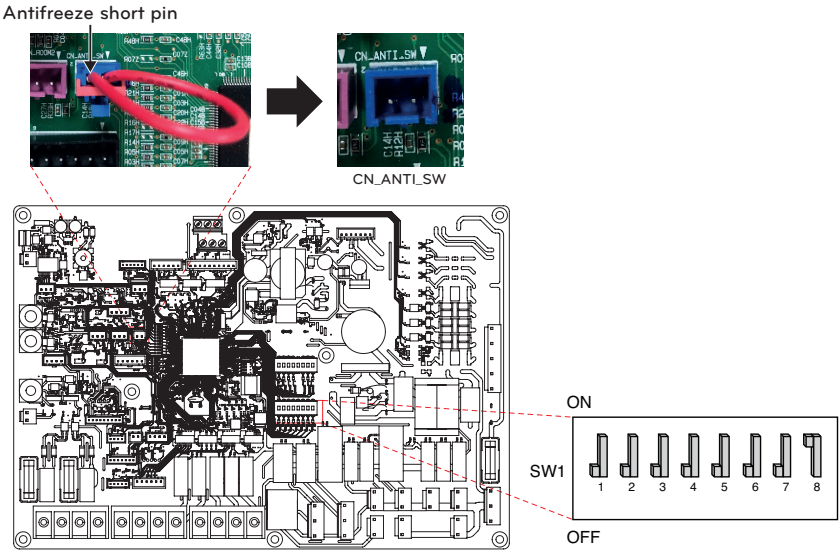

NOTE

Before change of setting is applied, the antifreeze short pin (CN_ANTI_SW) must be removed and DIP switch SW1 - No.8 must be on.
Frost protection must be tested with a refractometer on a frequent basis!

Connectivity - Modbus address(HEX)

This function allows control of the heat pump by external devices.

NOTE

To use this function DIP switch No.1 of SW1 must be set to ON and No.2 to ON.

Modbus memory map

- Baud Rate : 9 600 bps
- Stop Bit : 1 stop bit
- Parity : None Parity

Coil Register (0x01)

Register	Description	Value explanation
00001	Enable/Disable (Heating/Cooling)	0 : Operation OFF / 1 : Operation ON
00002	Enable/Disable (DHW)	0 : Operation OFF / 1 : Operation ON
00003	Silent Mode Set	0 : Silent mode OFF / 1 : Silent mode ON
00004	Trigger Disinfection operation	0 : Keep status / 1 : Operation start
00005	Emergency Stop	0 : Normal operation / 1 : Emergency stop
00006	Trigger Emergency Operation	0 : Keep status / 1 : Operation Start
00007	Active Power Limitation	0: Not used / 1: Limit power acc. Reg. 40025

Discrete Register (0x02)

Register	Description	Value explanation
10001	Water flow status	0 : Flow rate ok / 1 : Flow rate too low
10002	Water Pump status	0 : Water Pump OFF / 1 : Water Pump ON
10003	Ext. Water Pump status	0 : Water Pump OFF / 1 : Water Pump ON
10004	Compressor status	0 : Compressor OFF / 1 : Compressor ON
10005	Defrosting status	0 : Defrost OFF / 1 : Defrost ON
10006	DHW heating status (DHW Thermal On/Off)	0 : DHW inactive / 1 : DHW active
10007	DHW Tank disinfection status	0 : Disinfection inactive / 1 : Disinfection active
10008	Silent mode status	0 : Silent mode inactive / 1 : Silent mode active
10009	Cooling status	0 : No cooling / 1 : Cooling operation
10010	Solar pump status	0 : Solar pump OFF / 1: Solar pump ON
10011	Backup heater (Step 1) status	0 : OFF / 1 : ON
10012	Backup heater (Step 2) status	0 : OFF / 1 : ON
10013	DHW boost heater status	0 : OFF / 1 : ON
10014	Error status	0 : no error / 1 : error state
10015	Emergency Operation Available (Space heating/cooling)	0 : Unavailable / 1 : Available
10016	Emergency Operation Available (DHW)	0 : Unavailable / 1 : Available
10017	Mix pump status	0 : Mix pump OFF / 1 : Mix pump ON

Input Register (0x03)

Register	Description	Value explanation
30001	Error Code	Error Code
30002	ODU operation Cycle	0 : Standby(OFF) / 1 : Cooling / 2 : Heating
30003	Water inlet temp.	[0.1 °C ×10]
30004	Water outlet temp.	[0.1 °C ×10]
30005	Backup heater outlet temp.	[0.1 °C ×10]
30006	DHW tank water temp.	[0.1 °C ×10]
30007	Solar collector temp.	[0.1 °C ×10]
30008	Room air temp. (Circuit 1)	[0.1 °C ×10]
30009	Current Flow rate	[0.1 LPM ×10]
30010	Flow temp. (Circuit 2)	[0.1 °C ×10]
30011	Room air temp. (Circuit 2)	[0.1 °C ×10]
30012	Energy State input	0 : Energy state 0; 1: Energy state 1….
30013	Outdoor Air temp.	[0.1 °C ×10]
30014	Water pressure	[0.1 bar ×10]
30015	Solar storage temp. (bottom sensor)	[0.1 °C ×10]
30037	ENERGY_INSTANTANEOUS_TOTAL(High)	[W] 1), 2), 3), 4)
30038	ENERGY_INSTANTANEOUS_TOTAL(Low)	
30039	ENERGY_ACCUMULATIVE_TOTAL(High)	[Wh] 1), 2), 3), 4)
30040	ENERGY_ACCUMULATIVE_TOTAL(Low)	
30041	ENERGY_ACCUMULATIVE_HEAT(High)	[Wh] 1), 2), 3)
30042	ENERGY_ACCUMULATIVE_HEAT(Low)	
30043	ENERGY_ACCUMULATIVE_COOL(High)	[Wh] 1), 2), 3)
30044	ENERGY_ACCUMULATIVE_COOL(Low)	
30045	ENERGY_ACCUMULATIVE_DHW(High)	[Wh] 1), 2), 3)
30046	ENERGY_ACCUMULATIVE_DHW(Low)	
39998	Product Group	0x8 X (0x80, 0x83, 0x88, 0x89)
39999	Product Info.	Split : 0 / Monobloc : 3 / High Temp. : 4 / Medium Temp. : 5 / System Boiler : 6

NOTE

1) Total energy consumption = (High) value * 2^16 + (Low) value
2) The calculated power consumption is an estimation, the accuracy cannot be guaranteed. The energy data should NOT be used for being invoiced or requested to government incentive and subsidy.
3) Power consumption of heat pump outdoor unit (Comp. & Fan only) + Entire Indoor unit (Pump and Backup Heater)
4) Total : Heat + Cool + DHW

Holding Register (0x04)

Register	Description	Value explanation
40001	Operation Mode	0 : Cooling / 4 : Heating / 3 : Auto
40002	Control method (Circuit 1/2)	0 : Water outlet temp. control 1 : Water inlet temp. control 2 : Room air control
40003	Target temp (Heating/Cooling) Circuit 1	[0.1 °C ×10]
40004	Room Air Temp. Circuit 1	[0.1 °C ×10]
40005	Shift value(Target) in auto mode Circuit 1	1K
40006	Target temp (Heating/Cooling) Circuit 2	[0.1 °C ×10]
40007	Room Air Temp. Circuit 2	[0.1 °C ×10]
40008	Shift value(Target) in auto mode Circuit 2	1K
40009	DHW Target temp.	[0.1 °C ×10]
40010	Energy state input	0 : Not Use 1 : Forced off (Equal to TB_SG1=close / TB_SG2=open) 2 : Normal operation (Equal to TB_SG1=open / TB_SG2=open) 3 : On-recommendation (Equal to TB_SG1=open / TB_SG2=close) 4 : On-command (Equal to TB_SG1=close / TB_SG2=close) 5 : On-command step 2 (++ Energy Consumption compared to Normal) 6 : On-recommendation Step 1 (+ Energy Consumption compared to Normal) 7 : Energy Saving mode (- Energy Consumption compared to Normal) 8 : Super Energy saving mode (-- Energy Consumption compared to Normal)
40024	Compressor Modulation	0 : Not Used / 40~100 : Compressor Modulation The new maximum frequency of the compressor is determined by the compressor modulation value and the maximum compressor frequency of the existing product. i.e) Maximum compressor frequency: 100Hz Compressor modulation value: 0.4 → New maximum frequency of the compressor: 100 * 0.4 = 40 Hz
40025	Power Limitation value	0.1 kW ~ 25.0 kW

Connectivity - CN_EXT

Instead of external Dry contact, CN-EXT can be used to lock the heat pump by external signals.

Setting	Contact input	Operation *	Remark
Not use	-	-	CN_EXT is not used
Simple operation	Open	Operation "Off"	In case of simple operation, operation on/off is possible as per either the remote controller or external input signal.
	Close	Operation "On"	
Simple Dry contact	Open	Operation "Off" with dry contact lock	In this case, "Operation on" is possible only with the Central controller.
	Close	Lock released	Release dry contact lock setting and "operation on" is possible depend on dry contact auto setting Follows setting 'Dry contact mode': Auto = Contact closed → Operation on Manual = Contact closed → Keep on "operation off" state, but "operation on" is possible by remote controller manually
Single Emergency stop	Open	Emergency stop with forced lock	In this case, "Operation on" is impossible with any other controller.
	Close	Forced lock released	Release forced lock and keep on "operation off" state, but "operation on" is possible by remote controller manually Priority: Emergency stop lock > Central control lock > Dry contact lock

* This operation on / off means remote controller of / off for heating & cooling.

Connectivity - 3rd party boiler

Either the heat pump or the boiler is used for space heating

Three different modes are available to switch-over between heat pump and boiler:

- Manual: The boiler is activated and de-activated by User setting 'Function/3rd party boiler'.
- Biv-alternative: The boiler output is activated based on outdoor temperature. The bivalent temperature (Default: -7 °C) and the switch-over hysteresis (Default: 4 K) can be adjusted by setting.
- Biv-parallel : Automatic release of boiler. Below bivalent temperature, the heat pump is still in operation. The boiler is activated additionally, if the heat pump alone cannot meet the target temperature within reasonable time. The bivalent temperature (Default: -7 °C) and the switch-over hysteresis (Default: 4 K) can be adjusted by setting. The operation limit temperature is according to the type of model.

NOTE

Prices for electricity and fuel, as well as the maximum capacity of the heat pump must be considered when changing the Bivalent temp.

Biv-alternative

1) Seasonal auto temp / Outdoor temp / O1
2) Connectivity / 3rd party boiler / Temp
3) Connectivity / 3rd party boiler / Hysteresis
4) Seasonal auto temp / Outdoor temp / O2

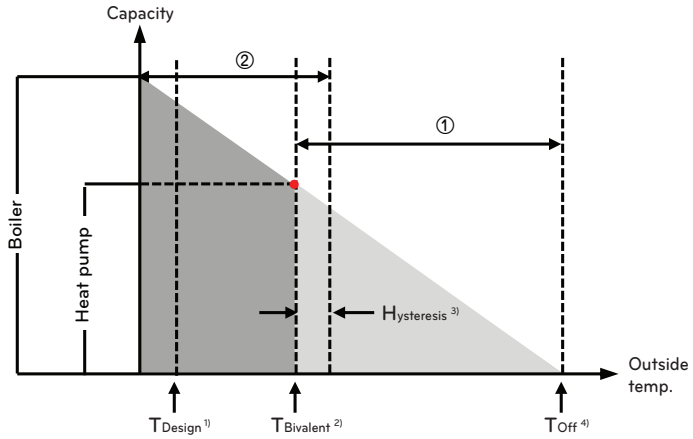

①	Heat pump only
②	Boiler only

Biv-parallel

1) Seasonal auto temp / Outdoor temp / O1
2) Connectivity / 3rd party boiler / Temp (BP)
3) Connectivity / 3rd party boiler / Hysteresis
4) Seasonal auto temp / Outdoor temp / O2
5) Operation Limit temp (AP)
   - HM***HF U*** = -28°C
   - HM***MRS U*** = -25°C

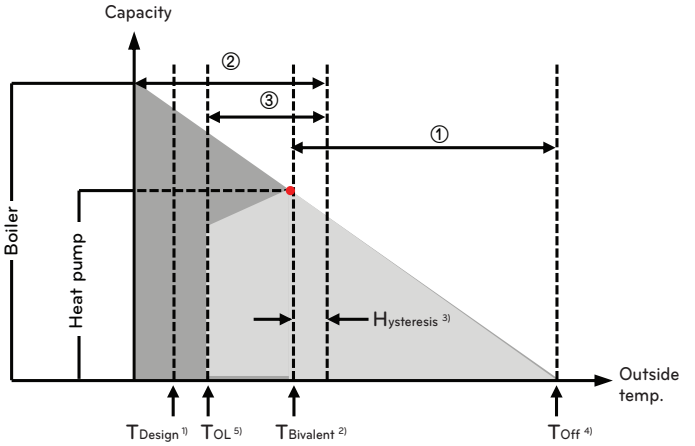

①	Heat pump only
②	Boiler only
③	Heat pump + Boiler

Connectivity - Energy state

The sub menu 'Energy state' can be used to influence the heat pumps's operation based on availability of renewable energy - for instance from PV-panels.

There are two options to make use of this logic:

- Use Modbus : ESS or SG-Ready or another third-party device is connected by Modbus serial line.
- Use Digital inputs : ESS or SG-Ready or another third-party controller(e.g. SmartHome controller of PV inverter) is connected by 230 V inputs.
- Use ThinQ : ESS or another third-party device is connected by ThinQ.

Using Modbus RTU allows to use eight different energy states, while Digital inputs provides four different energy states.

Digital inputs (TB_SG)		Energy state	Mode	Default	Range
ES1	ES2				
Close	Open	1	Heating	Off	Fixed
			Cooling	Off	Fixed
			DHW	Off	Fixed
Open	Open	2	Heating	Normal	Fixed
			Cooling	Normal	Fixed
			DHW	Normal	Fixed
Open	Close	3	Heating	2	Fixed
			Cooling	+/- 0	Fixed
			DHW	5	Fixed
Close	Close	4	Heating	+/- 0	Fixed
			Cooling	+/- 0	Fixed
			DHW	Target: 80°C	Fixed
-	-	5	Heating	5	0 ~ +30
			Cooling	-5	-30 ~ 0
			DHW	30	0 ~ +50
-	-	6	Heating	2	0 ~ +30
			Cooling	-2	-30 ~ 0
			DHW	10	0 ~ +50
-	-	7	Heating	-2	-30 ~ 0
			Cooling	2	0 ~ +30
			DHW	+/- 0	-50 ~ 0
-	-	8	Heating	-5	-30 ~ 0
			Cooling	5	0 ~ +30
			DHW	+/- 0	-50 ~ 0

NOTE

Use setting 'Digital inputs assignment' to replace Energy state 3 and/or 4 with any of Energy states 3~8.
When connected to SG Ready, the Power Limitation function operates when ES1 is Close.

COMMISSIONING

Before starting operation, pre-check points are described in this chapter. Some comments about maintenance and how to do troubleshooting are presented.

Check List before Starting Operation

⚠ CAUTION

Turn off the power before changing wiring or handling product.

No	Category	Item	Check Point
1	Electricity	Field wiring	• All switches having contacts for different poles should be wired tightly according to regional or national legislation. • Only qualified person can proceed wiring. • Wiring and local-supplied electric parts should be complied with European and regional regulations. • Wiring should be following the wiring diagram supplied with the product.
2		Protective devices	• Install ELB (earth leakage breaker) with 30 mA residual current. • ELB of Backup heater located inside of Hydro unit should be turned on before starting operation.
3		Earth wiring	• Earth should be connected. Do not earth to gas or city water pipe, metallic section of a building, surge absorber, etc.
4		Power supply	• Use dedicated power line.
5		Terminal block wiring	• Connections on the terminal block (inside the control box of the unit) should be tightened.
6	Water	Charged water pressure	• After water charging, the pressure gauge (in front of the unit) should indicate 2.0~2.5 bar. Do not exceed 3.0 bar.
7		Air purge	• During water charging, air should be vented through air purges until water is spilling out. After all air is released, check to close all air vents tightly. There should be no noise caused by circulating air bubbles in any part of the system.
8		Shut-off valve	• Two shut-off valves (Field supply) - located at the end of water inlet pipe and water outlet pipe of the unit) should be open.
9		By-pass valve	• A device that ensures the minimum flow rate (e.g. Bypass valve, hydronic separator, buffer tank) should be installed and adjusted to secure enough water flow rate. If water flow rate is low, flow switch error (CH14) can occur.
10	Product Installation	Hang to the wall	• As the unit is hung on the wall, vibration or noise can be heard if the unit is not fixed tightly. • If the unit is not fixed tightly, it can fall down during operation.
11		Parts inspection	• There should be no apparently damaged parts inside the unit.
12		Refrigerant leakage	• Refrigerant leakage is a serious danger. If leakage found, contact qualified LG air conditioning installation person.
13		Drainage treatment	• While cooling operation, condensed dew can drop down to the bottom of the unit. In this case, prepare drainage treatment (for example, vessel to contain condensed dew) to avoid water drop.

To assure best performance of **Therma V™**, it is required to perform periodical check and maintenance. It is recommended to proceed following check list for once a year.

⚠ CAUTION

Turn off the power before proceeding maintenance.

No	Category	Item	Check Point
1	Water	Water pressure	• In normal state, the pressure gauge (in front of the unit) should indicate 2.0~2.5 bar. • If the pressure is less than 0.3 bar, please recharge the water.
2		Strainer (Water filter)	• Close the shut-off valves and disassemble strainer. Then wash the strainer to make it clean. • While disassembling the strainer, be careful for water flood out.
3		Safety valve	• Open the switch of the safety valve and check if water is flood out through the drain hose. • After checking, close the safety valve.
4	Electricity	Terminal block wiring	• Look and inspect if there is loosen or defected connection on the terminal block.

Starting Operation

Check before Starting Operation

- Check to see whether there is any refrigerant leakage, and check whether the power or transmission cable is connected properly.
- Confirm that 500 V megger shows 2.0 MΩ or more between power supply terminal block and ground. Do not operate in the case of 2.0 MΩ or less.

NOTE

Never carry out mega ohm check over terminal control board.
Otherwise the control board may break.

Immediately after mounting the unit or after leaving it turned off for an extended length of time, the resistance of the insulation between the power supply terminal board and the ground may decrease to approx. 2.0 MΩ as a result of refrigerant accumulation in the internal compressor.

If the insulation resistance is less than 2.0 MΩ, turn on the main power supply.

- When the power is applied for the first time, operate the product after preheating for 6 hours. To protect the unit by increasing the oil temperature of the compressor.

Starting Operation flow chart

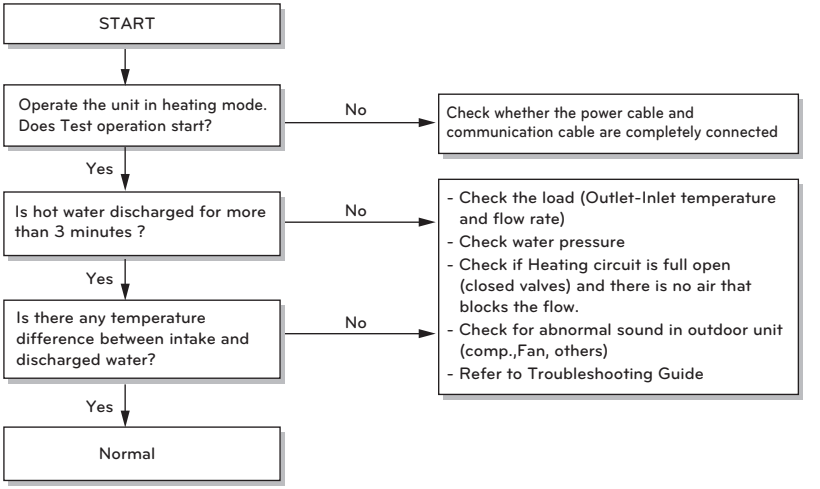

Trouble shooting

If **Therma V™** operates not properly or it does not start operation, please check following list.

⚠ CAUTION

Turn off the power before proceeding troubleshooting.

		Critical trouble / Error	Heavy trouble	Slight trouble	Option trouble
Description		Problem which can stop system operation, and can be resumed only after certificated professional's check.	Compressor cycle trouble. Emergency mode operation is performed by optional electric heater.	In most case, this trouble is concerned with sensor problems.	A problem is found for Option operation such as water tank heating.
Priority [1]		1	2	3	4
Availability of Emergency mode	Heat pump cycle	X	X	O	O [2]
	Backup heater	X	O [3]	O	O [2]
Related error codes		03,09,14,15,16, 20,52,232	02,05,06, 22,23,24,26,27,29, 32,34,35,40,41,43, 44,45,46,48,53,57, 60,61,62,114,115	01,17,18,19, 21,54,231	08,13

1) If more than one trouble occurs ("Duplicated trouble"), the trouble with higher priority defines the consequences (whether Emergency operation is possible or not).

2) Operation possible without optional function that has trouble. For instance, when DHW sensor is broken (CH08), hot water heating is not available.

3) Heating operation only. Not possible to use Cooling function.

NOTE

- Emergency mode operation is activated by pressing OK button on popup-window!
- After power reset, Emergency mode does NOT automatically resume!

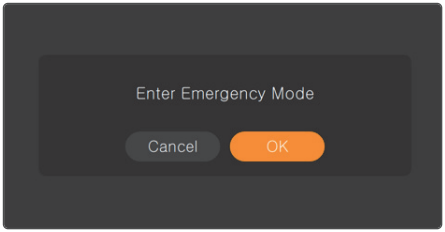

Troubleshooting for Problem while Operation

Problem	Reason	Solution
Heating or Cooling is not satisfactory.	• Setting target temperature is not proper.	• Set target temperature correctly. • Check if temperature is water-based or air-based. See 'Remote sensor active' and 'Temp. sensor selection'
	• Charged water is not enough.	• Check pressure gauge and charge more water until pressure gauge is indication 2~2.5 Bar
	• Water flow rate is low.	• Check if strainer gathers too much particles. If so, strainer should be cleaned. • Check if pressure gauge indicates above 4 Bar • Check if water pipe is getting closed due to stacked particles or lime.
Although electric power supply is OK (remote controller displays information), the unit does not start working.	• Water inlet temperature is too high.	• If water inlet temperature is above 65 °C, the unit does not operated for the sake of system protection
	• Water inlet temperature is too low.	• If water inlet temperature is below 5 °C in cooling operation, the unit does not operated for the sake of system protection. Wait while unit warms up the water inlet temperature. • If water inlet temperature is below 15 °C in heating operation, the unit does not operated for the sake of system protection. Wait while unit warms up to 18 °C the water inlet temperature. • If you are not using the back up heater accessory (HA**1M E1), increase the water temperature with the external heat source (heater, boiler). If the problem persists, contact your dealer. • If you want to use the screed drying function, be sure to purchase and install back up hater accessories (HA**1M E1).
Water pump noise.	• Air purging is not completely finished.	• Open the cap of air purge and charge more water until pressure gauge is indicating 2~2.5 Bar • If water does not splash out when the tip(at the top of the hole) is pressed, then air purging is not completed yet. If well purged, the water will splash out like fountain.
	• Water pressure is low.	• Check if pressure gauge indicates above 0.3 Bar. • Check if the expansion tank and pressure gauge operates well.
Water is flood out through drain hose.	• Too much water is charged.	• Flood out water by opening the switch of the safety valve until pressure gauge is indicating 2~2.5 Bar.
	• Expansion tank is damaged.	• Replace the expansion tank.
DHW is not hot.	• Thermal protector of water tank heater is activated.	• Open the side panel of the DHW tank and push the reset button of the thermal protector. (for more detail information, please refer to installation manual of DHW tank.
	• DHW Heating is disabled.	• Select DHW Heating Operation and identify if icon is displayed on the remote controller.

Troubleshooting for Error Code

Error code	Title	Cause of error	Check point
1	Room air temp. sensor is broken	• Incorrect connection between sensor and PCB • PCB fault • Sensor fault	• Resistance*: 10 kΩ at 25°C (unplugged) • Voltage: 2.5 VDC at 25°C (plugged)
2	Refrigerant gas temperature sensor broken		• Resistance*: 5 kΩ at 25°C (unplugged) • Voltage: 2.5 VDC at 25°C (plugged)
3	Correspondence error (Indoor-PCB ↔ Remote control)	• Communication line is broken • RMC is broken or has wrong software • IDU-PCB is abnormal	• Check condition and polarity of wire between Remote controller and Indoor-PCB
5	Correspondence error (Outdoor-PCB ↔ Indoor-PCB)	• Communication line between outdoor and indoor unit is broken • Outdoor-PCB is damaged • Software setup is not compatible	• Check condition and polarity of wire between Outdoor- and Indoor-PCB • Check internal wiring between terminal blocks and PCB • Check software versions of Outdoor- and Indoor-PCB
6	Refrigerant liquid temperature sensor broken	• Incorrect connection between sensor and PCB • PCB fault • Sensor fault	• Resistance*: 5 kΩ at 25°C (unplugged) • Voltage: 2.5 VDC at 25°C (plugged)
8	DHW tank sensor broken		
9	EEPROM error	• Electrical or mechanical damage of EEPROM (Indoor-PCB)	• Request support from LG
10	BLDC water pump lock	• Trouble with BLDC-type water pump	• BLDC water pump defect • Wrong connection or damage of driver cable
11	Correspondence error (Outdoor-PCB ↔ Inverter-PCB)	• Communication line between outdoor-PCB and Inverter-PCB is broken • Inverter-PCB is damaged	• Loose connector or wiring between internal PCBs in outdoor unit
13	Solar thermal sensor is broken	• Incorrect connection between sensor and PCB • PCB fault • Sensor fault	• Resistance*: 5 kΩ at 25°C (unplugged) • Voltage: 2.5 VDC at 25°C (plugged)

Error code	Title	Cause of error	Check point
14	Flows Switch/Flow sensor error	• Flow rate <= Minimum flow for at least 15 seconds while water pump is in operation. Minimum flow rate : (5,7,9 kW) 5 LPM (12,14,16 kW) 10 LPM	• Check the actual flow rate in the remote controller (Monitoring screen) • Make sure there is no water leakage / low pressure • Make sure the strainer or water pipe is not clogged and valves are open. • Make sure all air is released from heating circuit (!) • Check the condition of internal water circulation pump • Check installation of external pump (if needed) • Check the flow sensor itself
15	Water pipe abnormal overheat	• Abnormal operation of Backup heater • Leaving water temperature > 75°C	• External heat source not de-coupled from heat pump • Problem with Backup heater
16	Air-to-Water heat pump temperature sensor at once error	• More than one sensor shows invalid data	• Sensors mixed up or multiple damages
17	PHEX inlet temp. sensor Error	• Incorrect connection between sensor and PCB • PCB fault • Sensor fault	• Resistance*: 5 kΩ at 25°C (unplugged) • Voltage: 2.5 VDC at 25°C (plugged)
18	PHEX outlet temp. sensor Error		
19	Unit (Electric heater) outlet temp. sensor Error		
20	Backup heater/Thermal fuse	• Abnormal overheat (>= 80°C) of internal Backup heater	• Mechanical fault at thermal fuse • Wire damaged
21	DC Peak (IPM Fault)	• Instant over current • Over Rated current • Poor insulation of IPM	• An instant over-current in the U,V,W phase - Comp lock - Abnormal connection of U,V,W • Over load condition - Overcharging of refrigerant - Pipe length/diameter - Outdoor fan locked • Poor insulation of compressor

Error code	Title	Cause of error	Check point
22	CT 2 (Max CT)	• Input over-current	• Malfunction of compressor • Blocking of pipe • Low voltage input • Refrigerant, Pipe length, Blockage...
23	DC Link Voltage is low or high	• DC Link Voltage is above 420 V DC • DC Link Voltage is below 140 V DC	• Check CN_(L), CN_(N) Connection • Check Input Voltage • Check PCB DC Link voltage sensor parts
24	High Pressure Switch Perception Error	• High pressure is above 34~36 kgf/cm^2 • Pressure switch is self-defective	• Check the high pressure • Check the connection of harness
26	DC Compressor positioning	• Compressor starting fail error	• Check the connection of comp wire "U,V,W" • Malfunction of compressor • Check the component of "IPM", detection parts.
27	AC input instant over-current	• PCB(Inverter) input current is over100 A(peak) for 2 us	• Overload operation (Pipe clogging/Covering/EEV defect/Ref. overcharge) • Compressor damage (Insulation damage/Motor damage) • Input voltage abnormal (L,N) • Powerline assemble condition abnormal • ODU-PCB (Assembly 1) damage (input current sensing part)
29	Inverter compressor over-current	• HM**1HF.UB60 INV phase current >= 33A • HM**3HF*.UB60 INV phase current >= 31A	• Overload operation (Pipe clogging/Covering/EEV defect/Ref. overcharge) • Compressor damage (Insulation damage/Motor damage) • Input voltage low • ODU-PCB (Assembly 1) damage
32	Temperature at discharge-pipe is too high	• Overload operation (Outdoor fan constraint, screened, blocked) • Refrigerant leakage or insufficient charge • INV Comp. discharge sensor failure • LEV connector displaced/poor • LEV assembly	• Check outdoor fan constraint/ screened/ flow structure • Check refrigerant leakage • Check if the sensor is normal • Check the status of EEV assembly

Error code	Title	Cause of error	Check point
35	Low Pressure error	• Excessive decrease of low pressure	• Defective low pressure sensor • Defective fan (motor) • Refrigerant shortage/leakage • Deformation of refrigerant pipe • Defective EEV • Outdoor-HEX blocked • SVC valve clogging • Defective PCB • Defective Pipe sensor
41	Problem in discharge-pipe temperature sensor	• Open / Short • Soldered poorly • Internal circuit error	• Bad connection of thermistor connector • Defect of thermistor connector (Open/Short) • Defect of outdoor PCB(Inverter)
42	(Low-)pressure sensor (Open/Short)	• Abnormal value of sensor(Open/Short)	• Bad connection of connector PCB • Bad connection Low pressure connector • Defect of Low pressure connector (Open/Short) • Defect of connector PCB (Open/Short) • Defect of PCB
43	(High-)pressure sensor (Open/Short)	• Abnormal value of sensor (Open/Short)	• Bad connection of connector PCB • Bad connection high pressure connector • Defect of high pressure connector (Open/Short) • Defect of connector PCB(Inverter) (Open/Short) • Defect of PCB
44	Problem in AIR temperature sensor	• Open / Short • Soldered poorly • Internal circuit error	• Bad connection of thermistor connector • Defect of thermistor connector (Open/Short) • Defect of outdoor PCB
45	Problem in condenser-middle pipe temperature sensor	• Open / Short • Soldered poorly • Internal circuit error	• Bad connection of thermistor connector • Defect of thermistor connector (Open/Short) • Defect of outdoor PCB
46	Problem in suction pipe temperature sensor	• Open / Short • Soldered poorly • Internal circuit error	• Bad connection of thermistor connector • Defect of thermistor connector (Open/Short) • Defect of outdoor PCB

Error code	Title	Cause of error	Check point
48	Problem in condenser out pipe temperature sensor	• Open / Short • Soldered poorly • Internal circuit error	• Bad connection of thermistor connector • Defect of thermistor connector (Open/Short) • Defect of outdoor PCB
52	Correspondence Error (Inverter-PCB ↔ Outdoor-PCB)	• Communication line between Outdoor-PCB and Inverter-PCB is broken • Inverter-PCB is damaged	• Generation of noise source interfering with communication • Checking the communication state between Outdoor-PCB and Inverter-PCB
53	Indoor unit Communication Error judging from outdoor PCB. (Outdoor-PCB ↔ Indoor-PCB)	• Communication line between Outdoor-PCB and Indoor-PCB is broken • Indoor-PCB is damaged • Software setup is not compatible	• Check condition and polarity of wire between Outdoor- and Indoor-PCB • Check internal wiring between terminal blocks and PCB • Check software versions of Outdoor- and Indoor-PCB
54	Phase sequence incorrect	• Prevention of phase unbalance and prevention of reverse rotation of constant-rate compressor	• Main power wiring fault
60	EEPROM Checksum mismatched	• EEPROM Access error and Check SUM error	• EEPROM contact defect/wrong insertion • Different EEPROM Version • ODU Inverter & Main PCB (Assembly 1) damage
61	Temperature at condenser-pipe is too high	• Overload operation (Outdoor fan constraint, screened, blocked) • Unit heat exchanger contaminated • EEV connector displaced / poor EEV assembly • Poor Cond. Pipe sensor assembly / burned	• Check outdoor fan constraint / screened / flow structure • Check if refrigerant overcharged • Check the status of EEV assembly • Check the status of sensor assembly / burn
62	Temperature at heatsink is too high	• Heat sink sensor detected high temp.(85 °C)	• HM**1HF.UB60 : EBR39538401 • HM**3HF*.UB60 : EBR89145606 - Check the soldered condition in the T1, T2 Pin of IGBTM - Check the heat sink sensor : 5kΩ ±5% / at 25 (Unplugged) - Check the screw torque of IGBTM - Check the spreadable condition of thermal grease on IGBTM - Check the pipe refrigerant cooling performance

Error code	Title	Cause of error	Check point
65	Problem in heatsink temperature sensor	• Abnormal value of sensor(Open/Short)	• Check if there is defect of thermistor connector (Open/Short) • Check defect of outdoor PCB
67	ODU BLDC fan lock	• Fan rotation speed < 10 rpm for 5 seconds during start-up operation or < 40 rpm in normal operation	• Fan motor damage. • Assembly condition abnormal. • Jammed fan by surroundings.
88	Inverter PCBA PFC EEPROM Error		
114	Problem in Injection EEV in let temp. sensor	• Open (Below -48.7 °C)/ Short(Over 96.2 °C) Soldered poorly Internal circuit error	• Bad connection of thermistor connector • Defect of thermistor connector (Open/Short) • Defect of outdoor PCB
115	Problem in Injection EEV outlet temp. sensor	• Open (Below -48.7 °C) / Short(Over 96.2 °C) • Soldered poorly • Internal circuit error	• Bad connection of thermistor connector • Defect of thermistor connector (Open/Short) • Defect of outdoor PCB
117	Problem in condenser-in-pipe temperature sensor	• Open / Short • Soldered poorly • Internal circuit error	• Bad connection of thermistor connector • Defect of thermistor connector (Open/Short) • Defect of outdoor PCB
145	Communication error (Main PCB ↔ Sub PCB)	• Communication line is broken • Main PCB is broken or has wrong software • Sub PCB is broken or has wrong software	• Check condition and polarity of wire between Main PCB and Sub PCB
231	Water pressure sensor problem	• Incorrect connection between sensor and PCB • PCB fault • Sensor fault	• Check the actual water pressure value shown on the remote controller. • Voltage : 0.65 V at 1.0 bar (plugged) • Refer to voltage-pressure table to check at different pressure.
232	Water flow sensor problem	• Incorrect connection between sensor and PCB • PCB fault • Sensor fault	• Check the actual water flow rate shown on the remote controller • Voltage : 1.22 V at 23 LPM (plugged) • Refer to voltage-flow table to check at different flow rates

Error code	Title	Cause of error	Check point
233	Problem in Solar hot water tank temperature sensor	• Open / Short • Soldered poorly • Internal circuit error	• Bad connection of thermistor connector • Defect of thermistor connector (Open/Short) • Defect of indoor PCB
234	Problem in Ambient temperature sensor	• Open / Short • Soldered poorly • Internal circuit error	• Bad connection of thermistor connector • Defect of thermistor connector (Open/Short) • Defect of indoor PCB
235	Problem in Buffer tank temperature sensor	• Open / Short • Soldered poorly • Internal circuit error	• Bad connection of thermistor connector • Defect of thermistor connector (Open/Short) • Defect of indoor PCB
237	Communication modem Error in indoor unit with Flat communication method *RS-485(EIA-485)	• Communication line between outdoor and indoor unit is broken • Outdoor-PCB is damaged • Software setup is not compatible • Communication method is mismatching. (AC method in outdoor unit ↔ Flat method in indoor unit)	• Check condition and polarity of wire between Outdoor- and Indoor-PCB • Check internal wiring between terminal blocks and PCB • Check software versions of Outdoor and Indoor-PCB

ANNEX

NOTE

The sensor resistance value and the voltage value at both ends may vary depending on the ambient temperature and the value has a deviation of 5 %.
There may be some errors depending on the measurement equipment.

Room air temperature sensors (NTC 10kOhm)

Indoor Temp.(°C)	Resistance(kΩ)	Voltage(V)
-10 °C	60 kΩ	4.1 V
-5 °C	44 kΩ	3.9 V
0 °C	33 kΩ	3.6 V
5 °C	25 kΩ	3.4 V
10 °C	0 kΩ	3.1 V
15 °C	15 kΩ	2.8 V
20 °C	12 kΩ	2.5 V
25 °C	10 kΩ	2.2 V
30 °C	8 kΩ	1.9 V
35 °C	6 kΩ	1.6 V
40 °C	5 kΩ	1.5 V
45 °C	4 kΩ	1.3 V

Pipe temperature sensors (NTC 5 kOhm)

Indoor Temp.(°C)	Resistance(kΩ)	Voltage(V)
-10 °C	29 kΩ	4.1 V
-5 °C	22 kΩ	3.9 V
0 °C	17 kΩ	3.6 V
5 °C	13 kΩ	3.3 V
10 °C	10 kΩ	3 V
15 °C	8 kΩ	2.8 V
20 °C	6 kΩ	2.5 V
25 °C	5 kΩ	2.2 V
30 °C	4 kΩ	1.9 V
35 °C	3.2 kΩ	1.7 V
40 °C	2.6 kΩ	1.5 V
45 °C	2.1 kΩ	1.2 V
50 °C	1.7 kΩ	1 V
55 °C	1.4 kΩ	0.9 V
60 °C	1.2 kΩ	0.8 V
65 °C	1 kΩ	0.7 V

Solar Temperature sensor (PT1000)

Temperature	Resistance (Ω)
-40	842.47
-30	882.11
-20	921.57
-10	960.86
0	1000
10	1039.03
20	1077.94
30	1116.73
40	1155.41
50	1193.97
60	1232.42
70	1270.75
80	1308.97
90	1347.07
100	1385.06
110	1422.93
120	1460.68

Flow sensor

Flow(l/min)	Voltage(V)
5.0	0.50
10.0	0.70
15.0	0.90
20.0	1.10
25.0	1.30
30.0	1.50
35.0	1.70
40.0	1.90
45.0	2.10
50.0	2.30
55.0	2.50
60.0	2.70
65.0	2.90
70.0	3.10
75.0	3.30
80.0	3.50

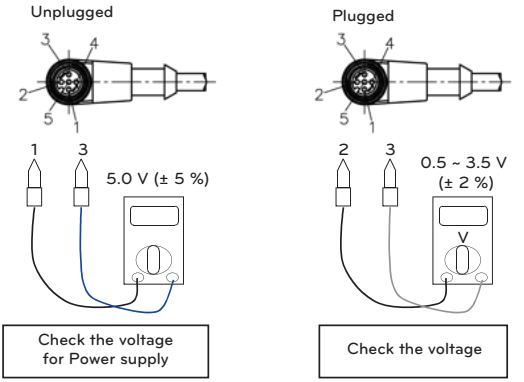

PIN 1	Black	Power supply 5 VDC ±5%
PIN 2	White	Analogue output flow 0.5 - 3.5 V correspond 5 - 80 l/min
PIN 3	Blue	GND
PIN 4	Brown	NPN open collector, 200 pulses/Liter
PIN 5	-	Not connected
Vout=1.5*P+0.5 or Vin*(0.3*P+0.1) Where, P=Pressure Applied [MPaG]		

NOTE

Supply voltage of 5VDC must be supplied between Pins 1 (black) and 3 (blue).
Measure voltage between Pins 2 (white) and 3 (blue) and compare with chart above.

Water pressure sensor

Pressure (bar)	Voltage(V)
0.2	0.53
0.4	0.56
0.6	0.59
0.8	0.62
1.0	0.65
1.2	0.68
1.4	0.71
1.6	0.74
1.8	0.77
2.0	0.80
2.2	0.83
2.4	0.86
2.6	0.89
2.8	0.92
3.0	0.95

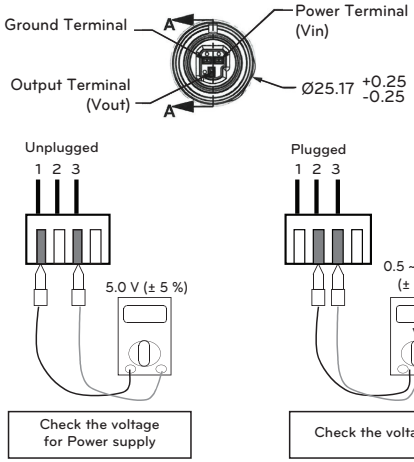

PIN 1	Red	Vin 5.0 ± 0.5 VDC
PIN 2	White	Vout 0.5VDC - 3.5VDC (to 3.8V)
PIN 3	Black	GND

NOTE

Supply voltage of 5VDC must be supplied between Pins 1 (RED) and 3 (Black). Measure voltage between Pins 2 (white) and 3 (Black) and compare with chart above.



Factory :
LG Electronics Inc.
84, Wanam-ro, Seongsan-gu, Changwon-si, Gyeongsangnam-do, KOREA

LG Electronics Tianjin Appliances Co.,Ltd.
No. 9 Jin Wei Road, Bei Chen District, Tianjin, 300402, P.R. China

LG Electronics Wroclaw Sp. z o.o
ul. LG Electronics 1-2, Biskupice Podgórne, 55-040 Kobierzyce, Poland

UK Importer :
LG Electronics U.K. Ltd
Velocity 2, Brooklands Drive, Weybridge, KT13 0SL

Eco design requirement
The information for Eco design is available on the following free access website.
https://www.lg.com/global/support/cedoc/cedoc