OWNER'S MANUAL

AD Box For Transparent Display

Please read this manual carefully before operating your set and retain it for future reference.

TSP510-M
TSP510-A

www.lg.com

Copyright © 2018 LG Electronics Inc. All Rights Reserved.

TABLE OF CONTENTS

SAFETY PRECAUTIONS 3

- Precautions In Installing the Product.....3
- Precautions to the AC Adapter and Electrical Power.....5
- Precautions In Moving the Product.....7
- Precautions In Using the Product.....8

LICENSES..... 10

ASSEMBLY AND PREPARATION 11

- Parts and Buttons.....12
- Installing the Guide Brackets.....14

PRODUCT INSTALLATION 15

- TSP510-M LVDS Connection.....15
- TSP510-M to 55WFB LVDS Connection.....17
- TSP510-M to 49WFB LVDS Connection.....19
- TSP510-A LVDS Connection.....21
- TSP510-A to 32WFC LVDS Connection.....22

REMOTE CONTROL..... 23

USING THE TSP510-M / TSP510-A SET 25

- Connecting to a PC.....25
- External Device Connection.....25

TROUBLESHOOTING..... 26

PRODUCT SPECIFICATIONS..... 28

Warning: This equipment is compliant with Class A of CISPR 32. In a residential environment this equipment may cause radio interference.

SAFETY PRECAUTIONS

Please read these safety precautions carefully before using the product.

⚠ WARNING

If you ignore the warning message, you may be seriously injured or there is a possibility of accident or death.

⚠ CAUTION

If you ignore the caution message, you may be slightly injured or the product may be damaged.

⚠ WARNING

- Indoor Use Only.

Precautions In Installing the Product

⚠ WARNING

- Keep away from heat sources like electrical heaters.
  - Electrical shock, fire, malfunction, or deformation may occur.
- Keep the packing anti-moisture material or vinyl packing out of the reach of children.
  - Anti-moisture material is harmful if swallowed. If swallowed by mistake, force the patient to vomit and visit the nearest hospital. Additionally, vinyl packing can cause suffocation. Keep it out of the reach of children.
- Do not put heavy objects on the product or sit upon it.
  - If the product collapses or is dropped, you may be injured. Children must pay particular attention.
- Do not leave the power or signal cable unattended on the pathway.
  - The passerby can trip or fall, which can cause electrical shock, fire, product breakdown, or injury.
- Install the product in a neat and dry place.
  - Dust or moisture can cause electrical shock, fire or product damage.
- If you can smell smoke or other odors or hear a strange sound unplug the power cord and contact the service center.
  - If you continue to use without taking proper measures, electrical shock or fire can occur.
- If you dropped the product or the case is broken, turn off the product and unplug the power cord.
  - If you continue to use without taking proper measures, electrical shock or fire can occur. Contact the service center.

- Do not drop an object on or apply pressure to the product. Do not throw any toys or objects on the product screen.
  - It can cause injury to human, problem to product and damage the display.
- Do not let the product fall or drop when connecting it with an external device.
  - This may cause injury and/or damage to the product.
- When connecting it to a game device, keep a distance of four times the diagonal measurement of the screen from the device.
  - If the product falls because of the short cable, this may cause injury and/or damage to the product.
- Do NOT install this product on a wall where there is high risk of exposure to oil fumes or mist.
  - This may damage product and cause it to fall.

⚠ CAUTION

- Make sure the product ventilation holes are not blocked. Install the product in a suitably wide place (more than 100 mm from the wall).
  - If you install the product too close to the wall, it may be deformed or fire can break out due to internal heat.
- Do not block the ventilation hole of the product by a tablecloth or curtain.
  - The product can be deformed or fire can break out due to overheating inside the product.
- Install the product on a flat and stable place that has no risk of dropping the product.
  - If the product is dropped, you may be injured or the product may be broken.
- Install the product where no EMI occurs.
- Keep the product away from direct sunlight.
  - The product can be damaged.
- If you install the product in a place that does not meet the recommended conditions, this may cause serious damage to the product's picture quality, life cycle, and appearance. Please check with LG or a qualified installer before installing. This caution applies to a place where there is an abundance of fine dust or oil mist, chemical substances are used, the temperature is very high or low, the humidity is very high, or the product is likely to remain turned on for a long period of time (airport and train station), failure to do so will invalidate the warranty.
- Do not install the product in an area with poor ventilation (e.g.on a bookshelf, in a closet) or outside and avoid placing on cushions or carpets.
- In addition, do not install it where there are heating objects such as lighting equipment.

Precautions to the AC Adapter and Electrical Power

⚠ WARNING

- If water or any foreign substance goes inside the product (TV, monitor, power cord, or AC adapter), disconnect the power cord immediately and contact the service center.
  - Otherwise, this may cause a fire or electric shock due to damage to the product.
- Do not touch the power plug or AC adapter with wet hands. If the pins of the plug are wet or dusty, wipe and dry them before use.
  - Otherwise, this may cause a fire or electric shock.
- Make sure to completely insert the power cord into the AC adapter.
  - If loosely connected, the poor connection may cause a fire or electric shock.
- Be sure to use power cords and AC adapters provided or approved by LG Electronics, Inc.
  - The use of non-approved products may cause a fire or electric shock.
- When unplugging the power cord, always pull it by the plug. Do not bend the power cord with excessive force.
  - The power line can be damaged, which may cause electric shock or fire.
- Be careful not to step or place heavy objects (electronic appliances, clothing, etc.) on the power cord or AC adapter. Be careful not to damage the power cord or AC adapter with sharp objects.
  - Damaged power cords may cause a fire or electric shock.
- Never disassemble, repair or modify the power cord or AC adapter.
  - This may cause a fire or electric shock.
- Make sure to connect the power cable to the grounded current.
  - You may be electrocuted or injured.
- Use the rated voltage only.
  - The product can be damaged, or you may be electrocuted.
- In the presence of thunder and lightning, never touch the power cord and signal cable because it can be very dangerous.
  - It can cause electric shock.
- Do not connect several extension cords, electrical appliances, or electrical heaters to a single outlet. Use a power strip with a grounding terminal designed for exclusive use with the computer.
  - A fire can break out due to overheating.
- Do not touch the power plug with wet hands. Additionally, if the cord pin is wet or covered with dust, dry the power plug completely or wipe dust off.
  - You may be electrocuted due to excess moisture.

- If you don't intend to use the product for a long time, unplug the power cable from the product.
  - Covering dust can cause a fire, or insulation deterioration can cause electric leakage, electric shock or fire.
- Fix the power cable completely.
  - If the power cable is not fixed completely, a fire can break out.
- Do not insert a conductor (like a metal chopstick) into one end of the power cable while the other end is connected to the input terminal on the wall. Additionally, do not touch the power cable right after plugging into the wall input terminal.
  - You may be electrocuted.
- The appliance coupler is used as the disconnect device.
- Please make sure the device is installed near the wall outlet to which it is connected and that the outlet is easily accessible.
- As long as this unit is connected to the AC wall outlet, it is not disconnected from the AC power source even if the unit is turned off.

⚠ CAUTION

- Be sure to keep the outlet, AC adapter, and pins of the power plug clean from dust and etc.
  - This may cause a fire.
- Do not unplug the power cord while the product is in use.
  - Electrical shock can damage the product.
- Use only the power cord supplied with the unit. If you use another power cord, make sure that it is certified by the applicable national standards when not provided by the supplier. If the power cable is faulty in any way, please contact the manufacturer or the nearest authorized repair service provider for a replacement.

Precautions In Moving the Product

WARNING

- Make sure to turn off the product.
  - You may be electrocuted or the product can be damaged.
- Make sure to remove all cables before moving the product.
  - You may be electrocuted or the product can be damaged.
- If you drop the product, the damaged product can cause electric shock or fire. Contact an authorized the service center for repair.
- Make sure the product is turned off, unplugged, and all cables have been removed.

CAUTION

- Do not shock the product when moving it.
  - You may be electrocuted or the product can be damaged.
- Do not dispose the product-packing box. Use it when you move.

Precautions In Using the Product

⚠ WARNING

- Do not disassemble, repair or modify the product at your own discretion.
  - Fire or electric shock accident can occur.
  - Contact the service center for check, calibration or repair.
- When the display is to be left unattended for an extended period of time, unplug it from the wall outlet.
- Keep the product away from water.
  - Fire or electric shock accident can occur.
- Do not shock or scratch the front and sides of the screen with metallic objects.
  - Otherwise, it may cause damage to the screen.
- Avoid high temperatures and humidity.

⚠ CAUTION

- Do not put or store inflammable substances near the product.
  - There is a danger of explosion or fire due to careless handling of the inflammable substances.
- When cleaning the product, unplug the power cord and scrub gently with a soft cloth to prevent scratching. Do not clean with a wet cloth or spray water or other liquids directly onto the product. An electric shock may occur. (Do not use chemicals such as benzene, paint thinners, or alcohol.)
- Take a rest from time to time to protect your vision.
- Keep the product clean at all times.
- Take a comfortable and natural position when working with a product to relax the muscles.
- Take a regular break when working with a product for a long time.
- Do not press strongly upon the panel with a hand or sharp object such as nail, pencil, or pen, or make a scratch on it.
- Keep the proper distance from the product.
  - Your vision may be impaired if you look at the product too closely.
- Set the appropriate resolution and clock by referring to the User's Guide.
  - Your vision can be impaired.
- Use authorized detergent only when cleaning the product. (Do not use benzene, thinner, or alcohol.)
  - Product can be deformed.
- Do not expose to dripping or splashing and do not place objects filled with liquids, such as vases, cups, etc. on or over the apparatus (e.g. on shelves above the unit).
- Batteries should not be exposed to excessive heat. For example, keep away from direct sunlight, open fireplace, and electric heaters.
- Do NOT place non-rechargeable batteries in charging device.
- Using headsets (earphones) for a long time or listening loudly can cause damage to your hearing.
- Do not use products using high voltage around the product. (e.g., a bug zapper)
  - Monitor may have a malfunction if it receives an electrical shock.

LICENSES

Supported licenses may differ by model. For more information of the licenses, visit *www.lg.com*.



The terms HDMI and HDMI High-Definition Multimedia Interface, and the HDMI Logo are trademarks or registered trademarks of HDMI Licensing Administrator, Inc. in the United States and other countries.



This DivX Certified® device has passed rigorous testing to ensure it plays DivX® video.
To play purchased DivX movies, first register your device at *vod.divx.com*. Find your registration code in the DivX VOD section of your device setup menu.
DivX Certified® to play DivX® video up to HD 1080p, including premium content.
DivX®, DivX Certified® and associated logos are trademarks of DivX, LLC and are used under license.
Covered by DivX Patents 7,295,673; 7,515,710; RE45,052; and others available at [*www.divx.com/patents*]

Manufactured under license from Dolby Laboratories. Dolby, Dolby Vision, Dolby Audio, Dolby Atmos, and the double-D symbol are trademarks of Dolby Laboratories.

ASSEMBLY AND PREPARATION

⚠ CAUTION

- Do not use any pirated items to ensure the safety and product life span.
- Any damages or injuries by using pirated items are not covered by the warranty.
- Risk of explosion if battery is replaced by an incorrect type.
- Dispose of used batteries according to the instructions.

NOTE

- The accessories provided with your product may vary depending on the model or region.
- Product specifications or contents in this manual may be changed without prior notice due to upgrade of product functions.
- SuperSign Software & Manual
  - Downloading from the LG Electronics website.
  - Visit the LG Electronics website (*http://partner.lge.com*) and download the latest software for your model.
- The warranty will not cover any damage caused by using the product in an excessively dusty environment.

Parts and Buttons

The image may be different according to the model.

TSP510-M

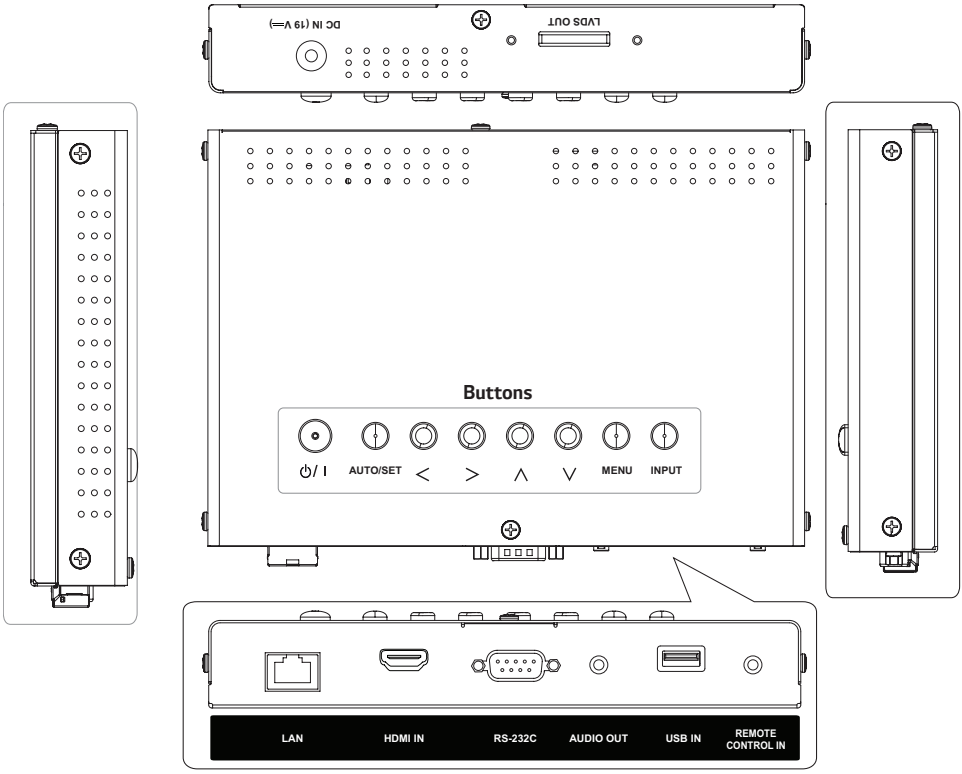

- ⏻/ I : Turns the power on or off.
- **AUTO/SET** : Displays the current signal and mode.
- < > : Adjusts the volume level.
- ∧ ∨ : Adjusts the up and down.
- **MENU** : Accesses the main menus, or saves your input and exits the menus.
- **INPUT** : Changes the input source.

TSP510-A

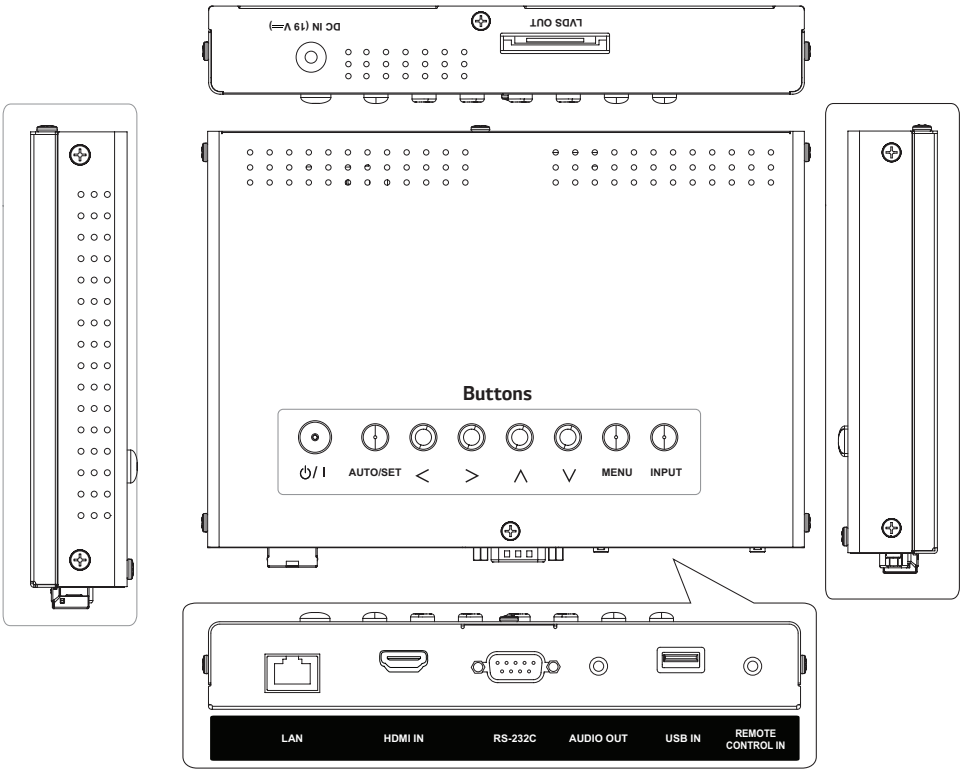

- ⏻/ **I** : Turns the power on or off.
- **AUTO/SET** : Displays the current signal and mode.
- < > : Adjusts the volume level.
- ∧ ∨ : Adjusts the up and down.
- **MENU** : Accesses the main menus, or saves your input and exits the menus.
- **INPUT** : Changes the input source.

Installing the Guide Brackets

- For certain models only.
- The image may be different according to the model.

1 Install the guide brackets to the set using the screws supplied as accessories.

Back of the Product

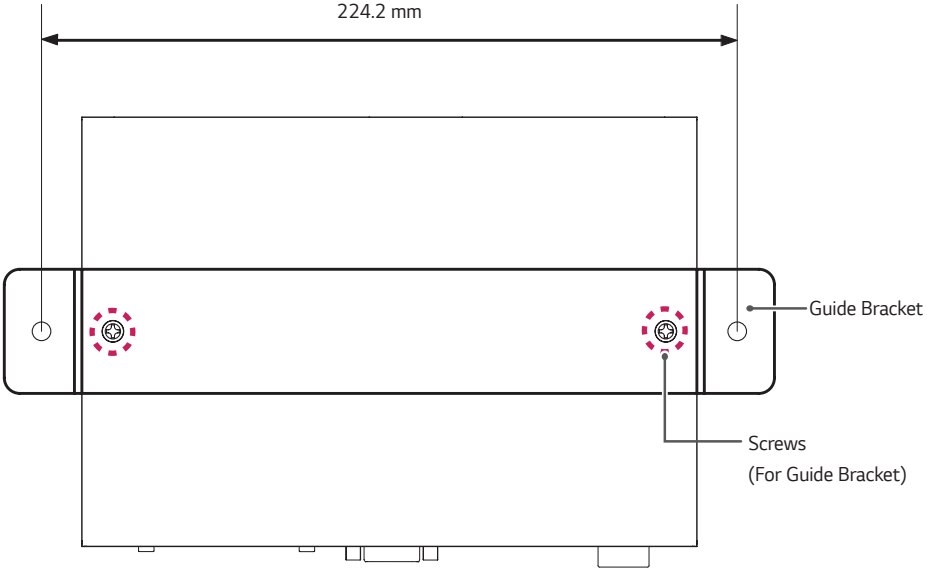

2 Fix the set with the guide brackets installed using the screws supplied as accessories.

Front of the Product

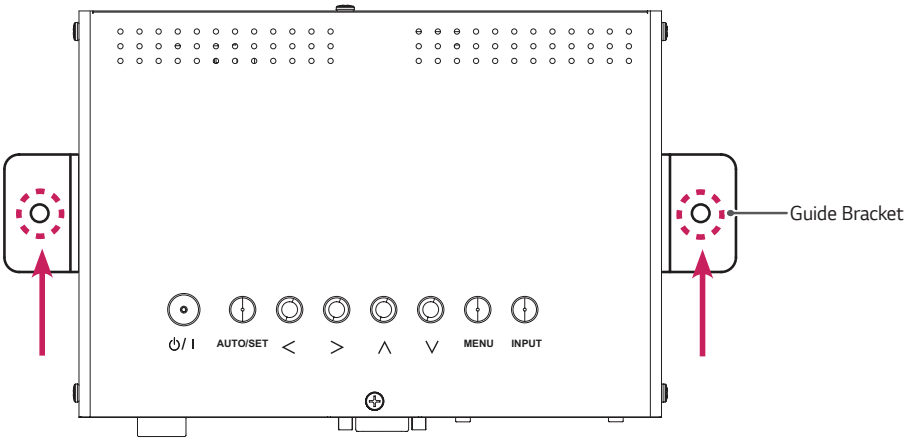

PRODUCT INSTALLATION

TSP510-M LVDS Connection

1 Unscrew two screws to assemble LVDS cable and Holder. Don't throw away the screws.

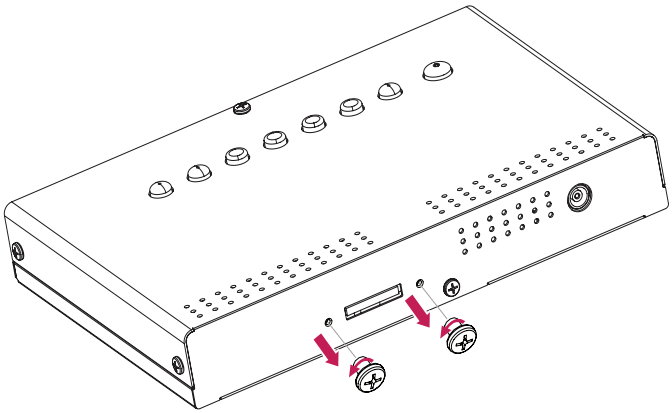

2 Put a LVDS cable in a holder. Cable head has to be properly oriented.

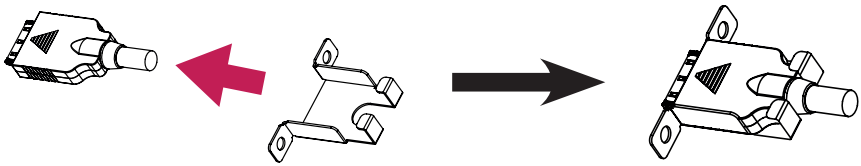

⚠ CAUTION

- To prevent the cable from being separated, you must use a holder.
- Check the direction of the LVDS cable to prevent damage to the cable.

3 Attach LVDS cable and holder to TSP510-M with two screws saved in step 1.

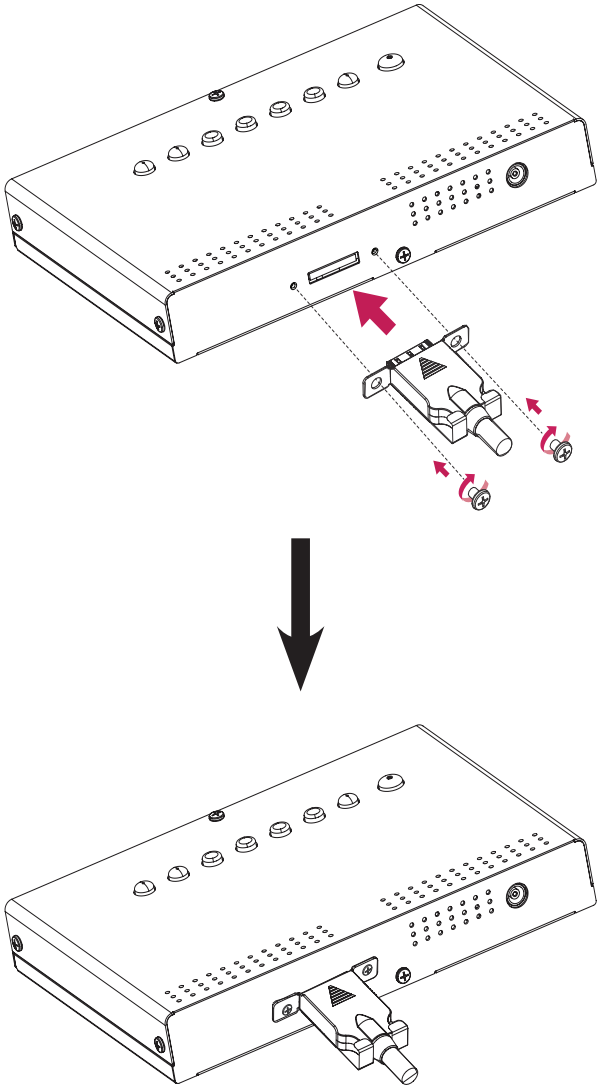

⚠ CAUTION

- To prevent the cable from being separated, you must use a holder.
- Check the direction of the LVDS cable to prevent damage to the cable.

TSP510-M to 55WFB LVDS Connection

1 Place a soft cloth on the table and put the set on it as illustrated.

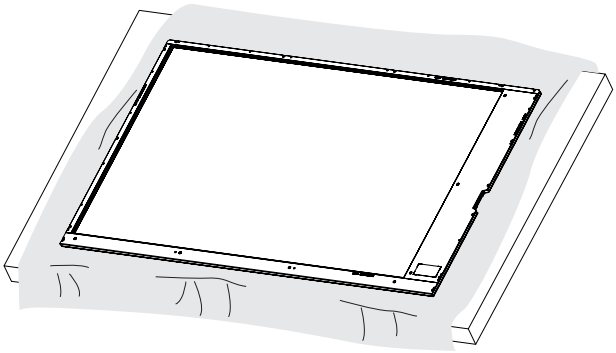

2 Put a LVDS cable in a holder. Cable head has to be properly oriented.

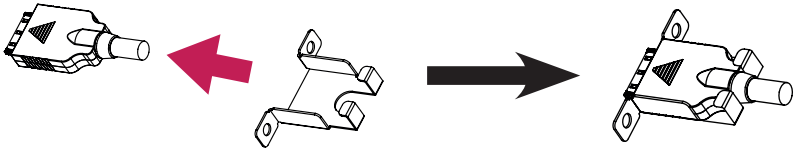

⚠ CAUTION

- To prevent the cable from being separated, you must use a holder.
- Check the direction of the LVDS cable to prevent damage to the cable.

3 Attach LVDS cable and holder to the set with two screws. (These screws are included with TSP510-M.)

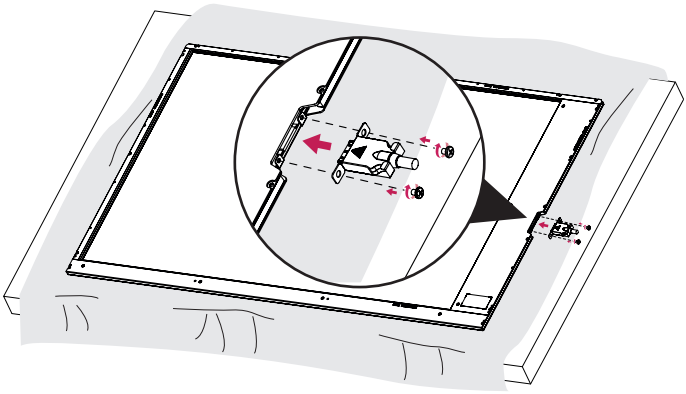

4 Cable head has to be toward set back. (Label is located on set back.)

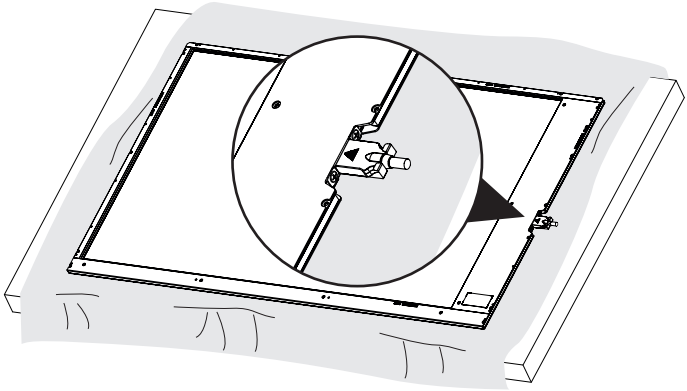

⚠ CAUTION

- To prevent the cable from being separated, you must use a holder.
- Check the direction of the LVDS cable to prevent damage to the cable.

TSP510-M to 49WFB LVDS Connection

1 Place a soft cloth on the table and put the set on it as illustrated.

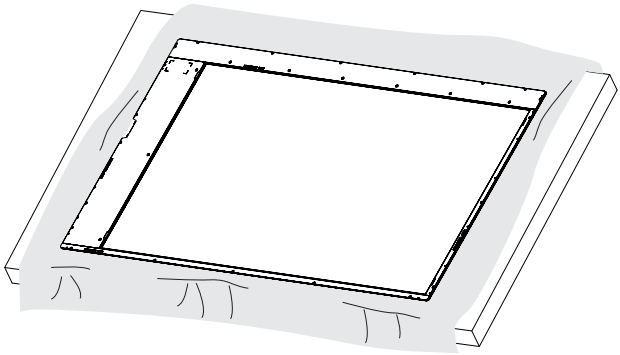

2 Put a LVDS cable in a holder. Cable head has to be properly oriented.

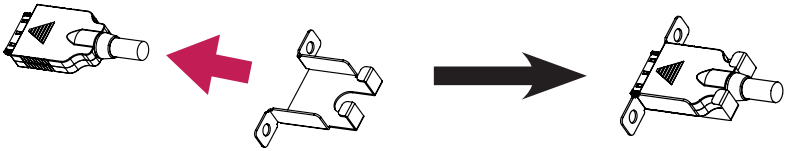

⚠ CAUTION

- To prevent the cable from being separated, you must use a holder.
- Check the direction of the LVDS cable to prevent damage to the cable.

3 Attach LVDS cable and holder to the set with two screws. (These screws are included with TSP510-M.)

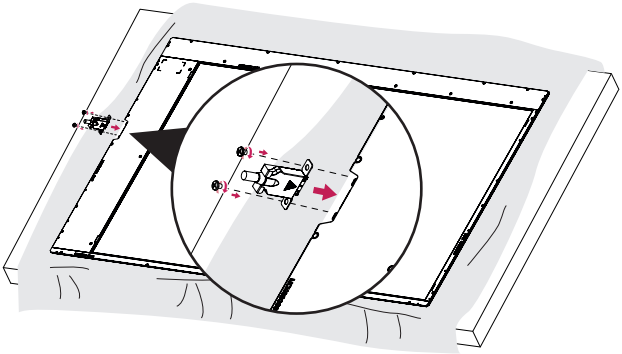

4 Cable head has to be toward set back. (Label is located on set back.)

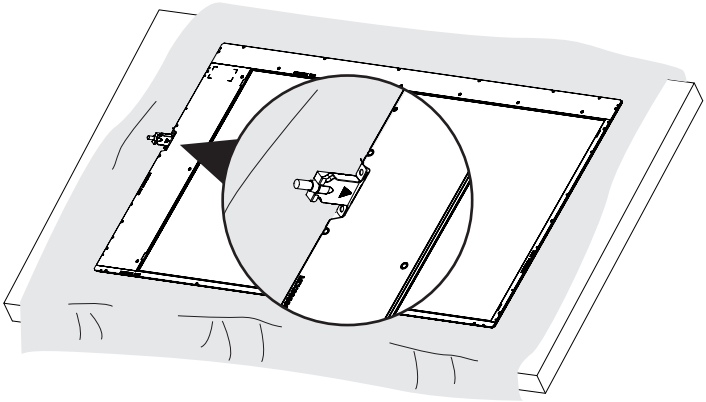

⚠ CAUTION

- To prevent the cable from being separated, you must use a holder.
- Check the direction of the LVDS cable to prevent damage to the cable.

TSP510-A LVDS Connection

Attach LVDS cable to TSP510-A.

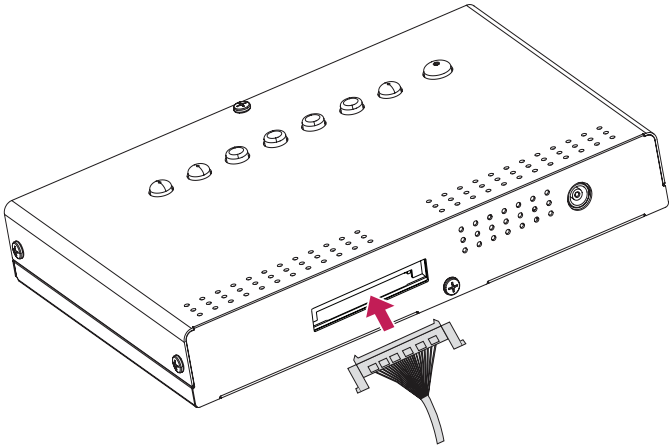

⚠ CAUTION

- Check the direction of the LVDS cable to prevent damage to the cable.

TSP510-A to 32WFC LVDS Connection

1 Place a soft cloth on the table and put the set on it as illustrated.

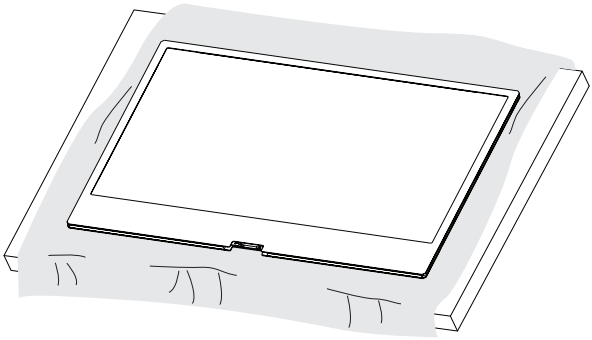

2 Attach LVDS cable to the set.

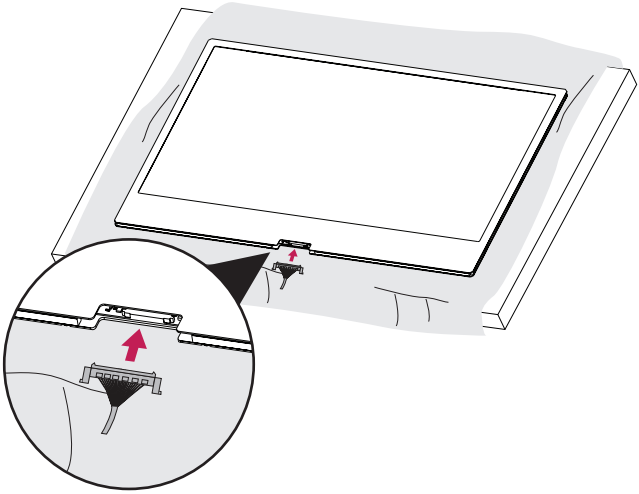

⚠ CAUTION

- Check the direction of the LVDS cable to prevent damage to the cable.

REMOTE CONTROL

The descriptions in this manual are based on the buttons of the remote control. Please read this manual carefully and use the TSP510-M / TSP510-A set correctly.

To replace batteries, open the battery cover, replace batteries (1.5 V AAA) matching ⊕ and ⊖ ends to the label inside the compartment, and close the battery cover.

To remove the batteries, perform the installation actions in reverse.

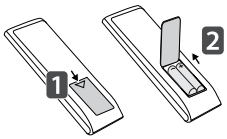

⚠ CAUTION

- Do not mix old and new batteries, as this may damage the remote control.
- Make sure to point the remote control to the remote control sensor on the TSP510-M / TSP510-A set.
- Some features of the remote control may not be supported in certain models.
- The image may be different according to the model.

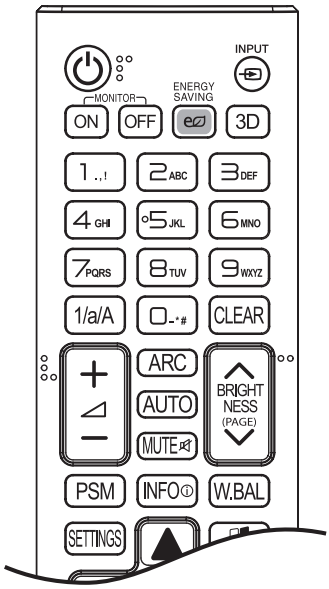

(POWER) Turns the TSP510-M / TSP510-A set on or off.

INPUT Selects the input mode.

MONITOR ON/OFF Turn off the TSP510-M / TSP510-A and then turn it back on.

ENERGY SAVING Adjusts the brightness of the picture to reduce energy consumption. (This model does not support this.)

3D Used for viewing 3D videos. (This model does not support this.)

Number and Alphabet buttons Enters numerical or alphabetical characters depending on the setting. (Depending on the model, this feature may not be supported.)

1/a/A Toggles between numerical and alphabetical. (Depending on the model, this feature may not be supported.)

CLEAR Deletes the entered numerical or alphabetical character. (Depending on the model, this feature may not be supported.)

Volume Up/Down Button Adjusts the volume. (This model does not support this.)

ARC Selects the Aspect Ratio mode.

AUTO Automatically adjusts picture position and minimizes image instability (available for RGB input only). (This model does not support this.)

MUTE Mutes all sounds. (This model does not support this.)

BRIGHTNESS Adjust the brightness by pressing the Up and Down buttons on the remote control. In USB mode, the OSD menu has the Page function to move to the next file list.

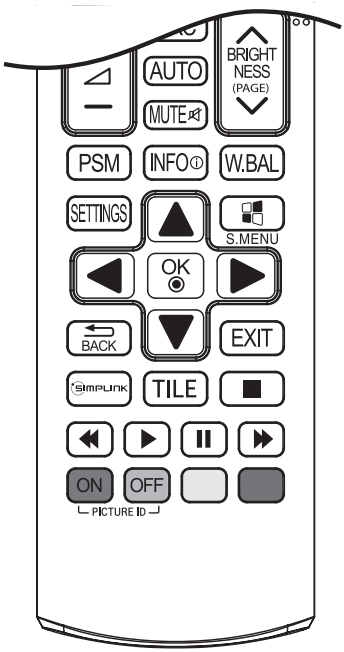

PSM Selects the Picture Mode.

INFO ⓘ Views the information of the currently program and the screen.

W.BAL Enters the White Balance menu. (This model does not support this.)

SETTINGS Accesses the main menus or saves your input and exit menus.

S.MENU SuperSign menu key. (This model does not support this.)

Navigation Buttons Scrolls through menus or options.

OK Selects menus or options and confirms your input.

BACK Allows you to move back one step in the user interaction function.

EXIT Quit all OSD tasks and applications.

SIMPLINK Allows you to control various multimedia devices to enjoy multimedia simply by using the remote control through the SimpLink menu. (This model does not support this.)

TILE Selects the TILE Mode.

PICTURE ID ON/OFF When the Picture ID number matches the Set ID number, you can control whichever TSP510-M / TSP510-A you want in multi-display format.

USB Menu Control Buttons Controls media playback.

USING THE TSP510-M / TSP510-A SET

Connecting to a PC

The TSP510-M / TSP510-A does not include the monitor. You can connect TSP510-M / TSP510-A to a transparent open frame (model: TSP510-M: 49/55WFB, TSP510-A: 32WFC) to view the picture on it.

Your TSP510-M / TSP510-A set supports the Plug and Play* feature.

* Plug and Play: A PC will have a built-in driver for TSP510-M / TSP510-A, no extra software is needed.

External Device Connection

Connect a HD receiver, DVD, or VCR player to the TSP510-M / TSP510-A set and select an appropriate input mode.
For the best picture and sound quality, connecting external devices to your TSP510-M / TSP510-A set using HDMI cables is recommended.

NOTE

- It is recommended to use the TSP510-M / TSP510-A set with an HDMI connection for the best image quality.
- To minimize the impact of electromagnetic waves, secure the cables with cable ties.
- Use a High Speed HDMI®/™ Cable.
- If you want to use HDMI-PC mode, you must set the input label to PC mode.
- When HDMI PC is used, a compatibility problem might occur.
- Use a certified cable with the HDMI logo attached. If you do not use a certified HDMI cable, the screen may not display or a connection error may occur.
- Recommended HDMI cable types
  - High-Speed HDMI®/™ cable
  - High-Speed HDMI®/™ cable with Ethernet
- Use the standard Macintosh adapter since an incompatible adapter is available in the market. (Different signaling system)

CAUTION

- If using a DP to HDMI dongle, make sure to use a dongle certified by the graphics card manufacturer.
- When connecting to multi-channel ports of a graphics card, make sure to use DP to HDMI dongles of the same model.

TROUBLESHOOTING

No image is displayed.

Problem	Action
Is the product power cord connected?	• See if the power cord is properly connected to the outlet.
Does the 'Invalid Format' message appear?	• The signal from the PC (graphics card) is out of the vertical or horizontal frequency range of the product. Adjust the frequency range by referring to the Specifications in this manual.
Does the 'No signal' message appear?	• The signal cable between PC and product is not connected. Check the signal cable. • Access the input menu to check the input signal.

'Unknown Product' message appears when the product is connected.

Problem	Action
Did you install the driver?	• Check if the Plug and Play function is supported by referring to the user manual for your graphics card.

The screen image looks abnormal.

Problem	Action
Is the screen position incorrect?	• See if the video card resolution and frequency are supported by the product. If the frequency is out of range, set to the recommended resolution in the Control Panel "Display" Setting menu.
The screen is displayed abnormally.	• The proper input signal is not connected to the signal port. Connect the signal cable that matches with the source input signal.

The audio function does not work.

Problem	Action
No sound?	• See if the audio cable is connected properly. • See if the sound is set properly.

Screen color is abnormal.

Problem	Action
The screen has low color resolution (16 colors).	• Set the color resolution to 24 bits or higher (true color). Select [Control Panel] → [Display] → [Settings] → [Color Table] in Windows. (The settings may differ depending on your operating system.)
The screen color is unstable or mono-colored.	• Check the connection status of the signal cable. You can also re-insert your PC graphics card.

The operation does not work normally.

Problem	Action
The power suddenly turned off.	• Is Off Time set? • Check the power control settings. The power supply has been interrupted.

PRODUCT SPECIFICATIONS

The product specifications below may be changed without prior notice due to upgrade of product functions.
" ~ " refers to alternating current (AC), and " ⎓ " refers to direct current (DC).

Video signal	Maximum resolution	HDMI: 1920 x 1080 @ 60 Hz - This may not be supported on some OS or graphics card types.
	Recommended resolution	HDMI: 1920 x 1080 @ 60 Hz - This may not be supported on some OS or graphics card types.
	Horizontal frequency	HDMI: 28.1 kHz to 83 kHz
	Vertical frequency	HDMI: 50 Hz to 60 Hz
	Synchronization	Digital
Input / Output ports		LAN, RS-232C, HDMI IN, USB IN, REMOTE CONTROL IN, AUDIO OUT, LVDS OUT (TSP510-M: 40p, TSP510-A: 51p)
Power	Rated power	19 V ⎓ 3.42 A
	Power consumption	On Mode: 15 W (Typ.) Sleep Mode: 0.5 W Off Mode: 0.5 W
AC/DC Adapter	DA-65G19 type, manufactured by APD Output: 19 V ⎓ 3.42 A	
Embedded battery	Applied	
Environmental Conditions	Operating Temperature Operating Humidity	0 °C to 40 °C 10 % to 80 %
	Storage Temperature Storage Humidity	-20 °C to 60 °C 5 % to 85 %
Dimensions (Width x Height x Depth) / Weight	198.2 mm x 32.4 mm x 144.8 mm / 645 g	

HDMI (PC) Support Mode

Resolution	Horizontal frequency (kHz)	Vertical frequency (Hz)
640 x 480	31.469	59.94
800 x 600	37.879	60.317
1024 x 768	48.363	60
1280 x 720	44.772	59.855
1366 x 768	47.7	60
1280 x 1024	63.981	60.02
1680 x 1050	65.290	59.954
1920 x 1080	67.5	60

HDMI (DTV) Support Mode

Resolution	Horizontal frequency (kHz)	Vertical frequency (Hz)
480/60p	31.5	60
576/50p	31.25	50
720/50p	37.5	50
720/60p	45	60
1080/50i	28.1	50
1080/60i	33.75	60
1080/50p	56.25	50
1080/60p	67.5	60

NOTE

- Resolutions available for the Input Label option in HDMI input modes.
  - PC resolutions: 640 x 480 / 60 Hz, 1280 x 720 / 60 Hz, 1920 x 1080 / 60 Hz
  - DTV resolutions: 480p, 720p, 1080p
- Vertical frequency: The product display functions by the screen image changing dozens of times every second like a fluorescent lamp. The vertical frequency or refresh rate is the number of image displays per second. The unit is Hz.
- Horizontal frequency: The horizontal interval is the time taken to display one horizontal line. When 1 is divided by the horizontal interval, the number of horizontal lines displayed every second can be tabulated as the horizontal frequency. The unit is kHz.



Make sure to read the Safety Precautions before using the product.

The model and serial numbers of the SET are located on the back and one side of the SET. Record it below should you ever need service.

MODEL _____

SERIAL _____

Temporary noise is normal when powering ON or OFF this device.