LG
Life's Good

ENGLISH
ITALIANO
ESPAÑOL
FRANÇAIS
DEUTSCH
PORTUGUÊS
РУССКИЙЯЗЫК

INSTALLATION MANUAL

AIR CONDITIONER

Please read this installation manual completely before installing the product.
Installation work must be performed in accordance with the national wiring standards by authorized personnel only.
Please retain this installation manual for future reference after reading it thoroughly.

CEILING CONCEALED DUCT - HIGH STATIC

P/NO : MFL42803104

www.lg.com

TABLE OF CONTENTS

Installation Requirements	Required Parts	Required Tools
Features 3		
Safety Precautions 4		
Installation 7		❏ Level gauge ❏ Screw driver ❏ Electric drill ❏ Hole core drill
Selection the best location 7	❏ Four type "A" screws ❏ Connecting cable	
Ceiling opening dimension and hanging bolt location 8	❏ Pipes: Gas side Liquid side (Refer to Product Data)	❏ Flaring tool set ❏ Specified torque wrenches (different depending on model No.) ❏ Spanner .....Half union
Indoor Unit Installation.....9	❏ Insulation materials ❏ Additional drain pipe	
Wiring Connection 9		❏ A glass of water ❏ Screw driver
Checking the Drainage.....10		❏ Hexagonal wrench ❏ Gas-leak detector ❏ Vacuum pump ❏ Gauge manifold
Dip Switch Setting 13		
Group Control Setting.....14		❏ Owner's manual ❏ Thermometer
How to Set E.S.P? 19		

Features

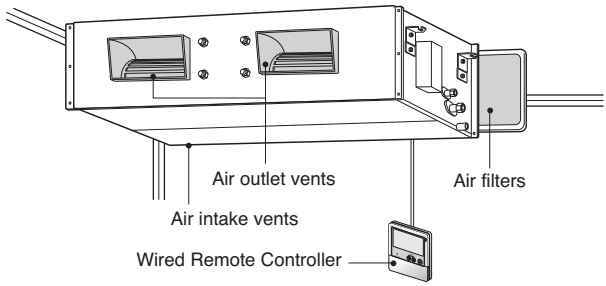

Name	Drain hose	Clamp metal	Washer for hanging backet	Clamp (Tie Wrap)	Insulation for fitting	(Other)
Quantity	1 EA	2 EA	8 EA	4 EA	1 SET	
Shape					 for gas pipe  for liquid pipe	• Owner's manual • Installation manual

Safety Precautions

To prevent injury to the user or other people and property damage, the following instructions must be followed.
- Be sure to read before installing the air conditioner.
- Be sure to observe the cautions specified here as they include important items related to safety.
- Incorrect operation due to ignoring instruction will cause harm or damage. The seriousness is classified by the following indications.

⚠WARNING	This symbol indicates the possibility of death or serious injury.
⚠CAUTION	This symbol indicates the possibility of injury or damage to properties only.

■ Meanings of symbols used in this manual are as shown below.

	**Be sure not to do.**
	**Be sure to follow the instruction.**

⚠WARNING

■ Installation

Do not use a defective or underrated circuit breaker. Use this appliance on a dedicated circuit.

- There is risk of fire or electric shock.

For electrical work, contact the dealer, seller, a qualified electrician, or an Authorized Service Center.

- Do not disassemble or repair the product. There is risk of fire or electric shock.

Always ground the product.

- There is risk of fire or electric shock.

Install the panel and the cover of control box securely.

- There is risk of fire or electric shock.

Always install a dedicated circuit and breaker.

- Improper wiring or installation may cause fire or electric shock.

Use the correctly rated breaker or fuse.

- There is risk of fire or electric shock.

Do not modify or extend the power cable.

- There is risk of fire or electric shock.

Do not let the air conditioner run for a long time when the humidity is very high and a door or a window is left open.

- Moisture may condense and wet or damage furniture.

Be cautious when unpacking and installing the product.

- Sharp edges could cause injury. Be especially careful of the case edges and the fins on the condenser and evaporator.

For installation, always contact the dealer or an Authorized Service Center.

- There is risk of fire, electric shock, explosion, or injury.

Do not install the product on a defective installation stand.

- It may cause injury, accident, or damage to the product.

Be sure the installation area does not deteriorate with age.

- If the base collapses, the air conditioner could fall with it, causing property damage, product failure, and personal injury.

Use a vacuum pump or Inert (nitrogen) gas when do leakage test or air purge. Do not compress air or Oxygen and do not use Flammable gases. Otherwise, it may cause fire or explosion.

- There is the risk of death, injury, fire or explosion.

■ Operation

Do not store or use flammable gas or combustibles near the product.

- There is risk of fire or failure of product.

⚠CAUTION

■ Installation

Always check for gas (refrigerant) leakage after installation or repair of product.

- Low refrigerant levels may cause failure of product.

Install the drain hose to ensure that water is drained away properly.

- A bad connection may cause water leakage.

Keep level even when installing the product.

- To avoid vibration or water leakage.

Do not install the product where the noise or hot air from the outdoor unit could damage the neighborhoods.

- It may cause a problem for your neighbors.

Use two or more people to lift and transport the product.

- Avoid personal injury.

Do not install the product where it will be exposed to sea wind (salt spray) directly.

- It may cause corrosion on the product. Corrosion, particularly on the condenser and evaporator fins, could cause product malfunction or inefficient operation.

If you eat the liquid from the batteries, brush your teeth and see doctor.
Do not use the remote if the batteries have leaked.

- The chemicals in batteries could cause burns or other health hazards.

Make sure to check the rated pressure outside machine and adjust E.S.P value after the installation of the product.

- Otherwise, there is a risk of weak cooling/heating and condensed water emission/dripping.

Installation

Read completely, then follow step by step.

Selection of the best location

Install the air conditioner in the location that satisfies the following conditions.

- The place shall easily bear a load exceeding four times the indoor unit's weight.
- The place shall be able to inspect the unit as the figure.
- The place where the unit shall be leveled.
- The place shall allow easy water drainage.(Suitable dimension "H" is necessary to get a slope to drain as figure.)
- The place shall easily connect with the outdoor unit.
- The place where the unit is not affected by an electrical noise.
- The place where air circulation in the room will be good .
- There should not be any heat source or steam near the unit.

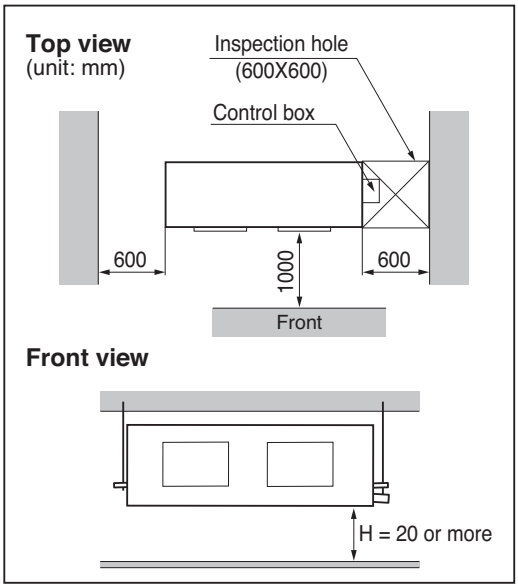

CAUTION : In case that the unit is installed near the sea, the installation parts may be corroded by salt, The installation parts (and the unit) should be taken appropriate anti-corrosion measures.

[Inspection Hole Standard]

Number of Inspection hole	Distance between False ceiling & Actual ceiling	Remarks
1	More than 100cm	Sufficient space in the ceiling for servicing.
2	20cm to 100cm	Insufficient space. Difficult for servicing
Hole size should be more than the size of IDU.	Less than 20cm	Minimum height for motor replacement.

Ceiling dimension and hanging bolt location

■ **Installation of Unit**
Install the unit above the ceiling correctly.

BH/BG/BR Chassis

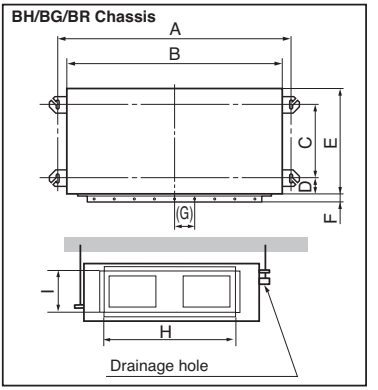

CASE 1

POSITION OF SUSPENSION BOLT

- Apply a joint-canvas between the unit and duct to absorb unnecessary vibration.

(Unit:mm)

Dimension / Chassis	A	B	C	D	E	F	(G)	H	I
BH	932	882	355	47	450	30	87	750	158
BG	1232	1182	355	47	450	30	87	830	186
BR	1282	1230	477	56	590	30	120	1006	294

(Unit:mm)

Dimension / Chassis	A	B	C	D	E	F	G	H	I	J	K	L
B8	1622	1565	580	292	695	1400	460	1122	1680	390	445	15

B8 Chassis

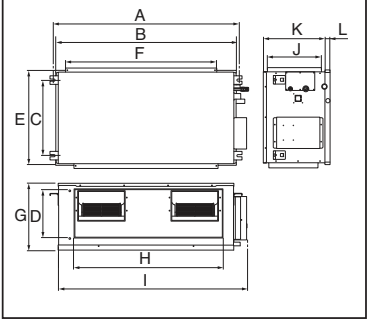

CASE 2

- Install the unit leaning to a drainage hole side as a figure for easy water drainage.

POSITION OF CONSOLE BOLT

- A place where the unit will be leveled and that can support the weight of the unit.
- A place where the unit can withstand its vibration.
- A place where service can be easily performed.

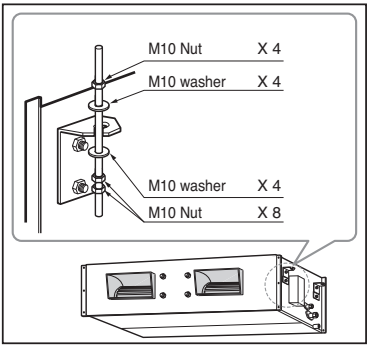

NOTICE

- Throughly study the following installation locations:

1. In such places as restaurants and kitchens, considerable amount of oil steam and flour adhere to the fan, the fin of the heat exchanger, resulting in heat exchange reduction, spraying, dispersing of water drops, etc.
   In these cases, take the following actions:
   - Make sure that the ventilation fan for smoke-collecting hood on a cooking table has sufficient capacity so that it draws oily steam which should not flow into the suction of the air conditioner.
   - Make enough distance from a cooking room to install the air conditioner in such a place where it may not suck in oil steam.
2. Avoid installing air conditioner in such circumstances where cutting oil mist or iron powder is in suspension in factories, etc.
3. Avoid places where inflammable gas is generated, flows in, is stored or vented.
4. Avoid places where sulfurous acid gas or corrosive gas is generated.
5. Avoid places near high frequency generators.

Indoor Unit Installation

- Select and mark the position for fixing bolts.
- Drill the hole for set anchor on the face of ceiling.

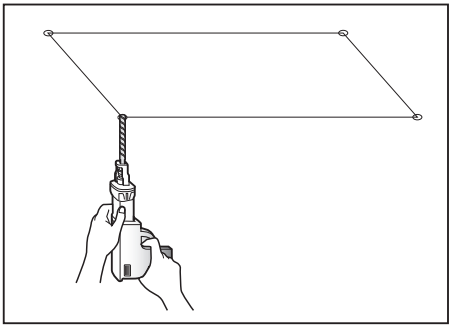

CAUTION : Tighten the nut and bolt to prevent unit falling.

- Insert the set anchor and washer onto the suspension bolts for locking the suspension bolts on the ceiling.
- Mount the suspension bolts to the set anchor firmly.
- Secure the installation plates onto the suspension bolts (adjust level roughly) using nuts, washers and spring washers.

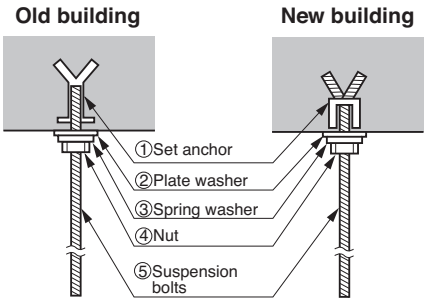

Wiring Connection

Connect the wires to the terminals on the control board individually according to the outdoor unit connection.

- Ensure that the color of the wires of outdoor unit and the terminal No. are the same as those of indoor unit respectively.

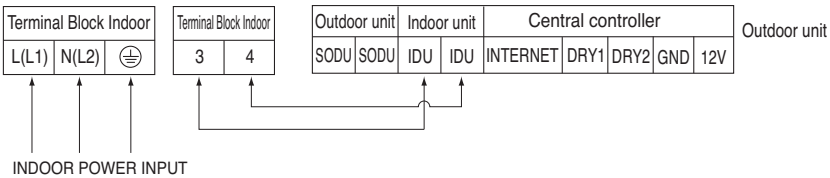

WARNING : Make sure that the screws of the terminal are free from looseness.

Clamping of cables

1) Arrange 2 power cables on the control panel.
2) First, fasten the steel clamp with a screw to the inner boss of control panel.
3) For the cooling model, fix the other side of the clamp with a screw strongly. For the heat pump model, put the 0.75mm^2 cable(thinner cable) on the clamp and tighten it with a plastic clamp to the other boss of the control panel.

CAUTION : The Power cord connected to the unit should be selected according to the following specifications.

INSULATION, OTHERS	Insulate the joint and tubes completely.

THERMAL INSULATION All thermal insulation must comply with local requirement.

INDOOR UNIT

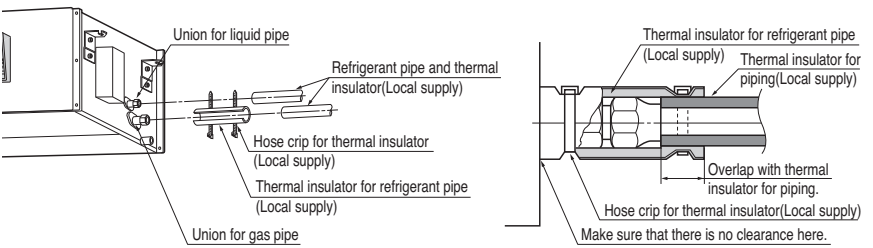

Checking the Drainage

1. Remove the Air Filter.

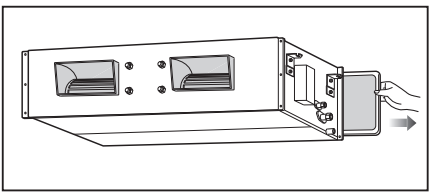

2. Check the drainage.

- Spray one or two glasses of water upon the evaporator.
- Ensure that water flows drain hose of indoor unit without any leakage.

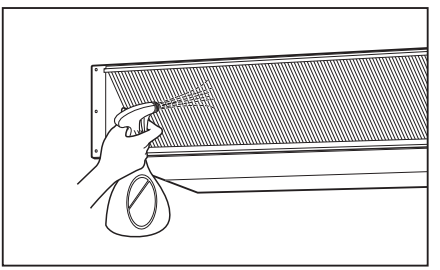

CAUTION

1. **Install declination** of the indoor unit is very **important for the drain** of the duct type air conditioner.
2. Minimum thickness of the insulation for the connecting pipe shall be 5mm.

Front of view

• The unit must be horizontal or declined to the drain hose connected when finished installation.

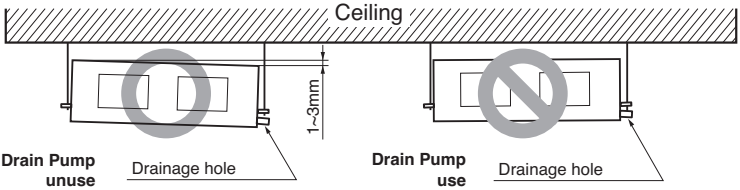

Indoor Unit Drain Piping

• Drain piping must have down-slope (1/50 to 1/100): be sure not to provide up-and-down slope to prevent reversal flow.

• During drain piping connection, be careful not to exert extra force on the drain port on the indoor unit.

• The outside diameter of the drain connection on the indoor unit is 32mm.

Piping material: Polyvinyl chloride pipe inner diometes Ø 25mm and pipe fittings

• Be sure to install heat insulation on the drain piping.

Heat insulation material: Polyethylene foam with thickness more than 8 mm.

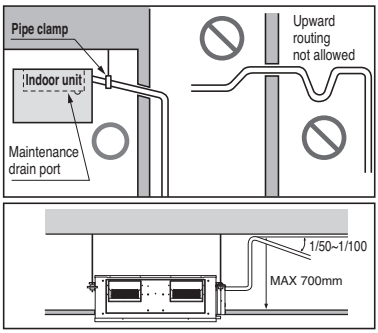

Drain test

The air conditioner uses a drain pump to drain water.
Use the following procedure to test the drain pump operation:

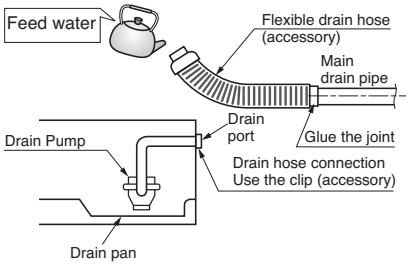

• Connect the main drain pipe to the exterior and leave it provisionally until the test comes to an end.
• Feed water to the flexible drain hose and check the piping for leakage.
• Be sure to check the drain pump for normal operation and noise when electrical wiring is complete.
• When the test is complete, connect the flexible drain hose to the drain port on the indoor unit.

⚠CAUTION

The supplied flexible drain hose should not be strained. A strained hose may cause leakage of water.

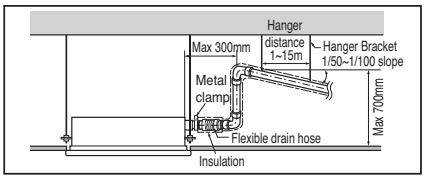

CAUTION:
After the confirmation of the above conditions, prepare the wiring as follows:

1) Never fail to have an individual power specialized for the air conditioner. As for the method of wiring, be guided by the circuit diagram posted on the inside of control box cover.

2) Provide a circuit breaker switch between power source and the unit.

3) The screws which fasten the wiring in the casing of electrical fittings are liable to come loose from vibrations to which the unit is subjected during the course of transportation. Check them and make sure that they are all tightly fastened. (If they are loose, it could give rise to burn-out of the wires.)

4) Specification of power source

5) Confirm that electrical capacity is sufficient.

6) Be sure that the starting voltage is maintained at more than 90 percent of the rated voltage marked on the name plate.

7) Confirm that the cable thickness is as specified in the power sources specification. (Particularly note the relation between cable length and thickness.)

8) Never fail to equip a leakage breaker where it is wet or moist.

9) The following troubles would be caused by voltage drop-down.
- Vibration of a magnetic switch, damage on the contact point, fuse breaking, disturbance by the normal function of an overload protection device.
- Proper starting power is not given to the compressor.

HAND OVER

Teach the customer the operation and maintenance procedures, using the operation manual.
(air filter cleaning, temperature control, etc.)

WIRED REMOTE CONTROLLER INSTALLATION

- Since the room temperature sensor is in the remote controller, the remote controller box should be installed in a place away from direct sunlight, high humidity and direct supply of cold air to maintain proper space temperature.
  Install the remote controller about 5ft(1.5m) above the floor in an area with good air circulation at an average temperature.

Do not install the remote controller where it can be affected by:

- Drafts, or dead spots behind doors and in corners.
- Hot or cold air from ducts.
- Radiant heat from sun or appliances.
- Concealed pipes and chimneys.
- Uncontrolled areas such as an outside wall behind the remote controller.
- This remote controller is equipped with a seven segment LED. display. For proper display of the remote controller LED's, the remote controller should be installed properly as shown in Fig.1.
  (The standard height is 1.2~1.5 m from floor level.)

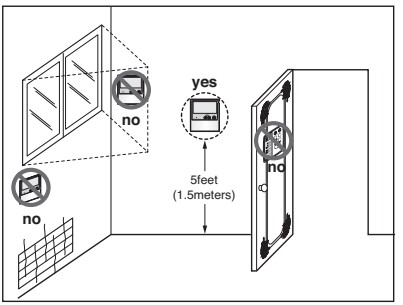

Fig.1 Typical locations for remote controller

Dip Switch Setting

	Function	Description	Setting Off	Setting On	Default
SW1	Communication	N/A (Default)	-	-	Off
SW2	Cycle	N/A (Default)	-	-	Off
SW3	Group Control	Selection of Master or Slave	Master	Slave	Off
SW4	Dry Contact Mode	Selection of Dry Contact Mode	Wired/Wireless remote controller Selection of Manual or Auto operation Mode	Auto	Off
SW5	Installation	Fan continuous operation	Continuous operation Removall	-	Off
SW6	Heater linkage	N/A	-	-	Off
SW7	Ventilator linkage	Selection of Ventilator linkage	Linkage Removal	Working	Off
	Vane selection (Console)	Selection of up/down side Vane	Up side + Down side Vane	Up side Vane Only	
	Region selection	Selection tropical region	General model	Tropical model	
SW8	Etc.	Spare	-	-	Off

⚠CAUTION

For Multi V Models, Dip switch 1, 2, 6, 8 must be set OFF.

Group Control Setting

1. Group Control 1

■ **Wired remote controller 1 + Standard Indoor Units**

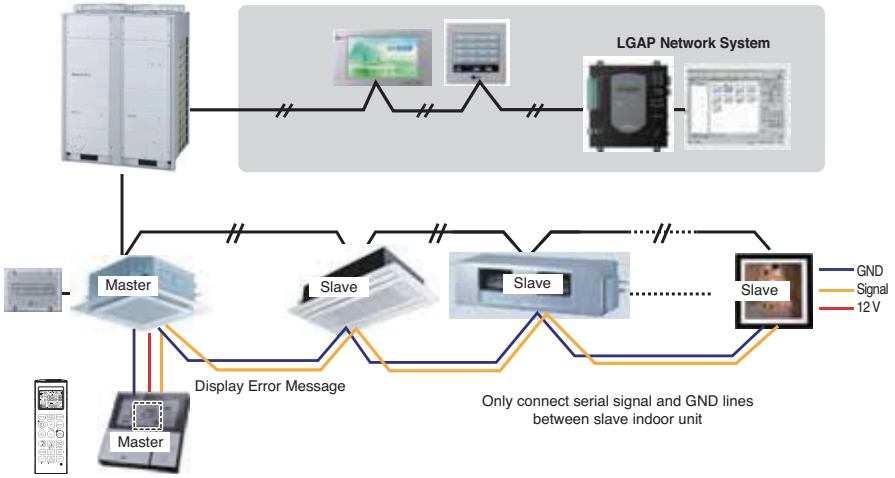

■ **Dip Switch in PCB (Cassette and Duct Type indoor units)**

① **Master Setting**
- No. 3 Off

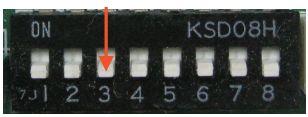

② **Slave Setting**
- No. 3 On

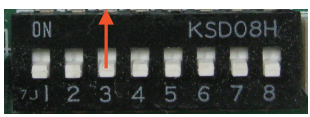

1. It is possible to 16 indoor units(Max) by one wired remote controller.
Set only one indoor unit to Master, set the others to Slave.

2. It is possible to connect with every type of indoor units.

3. It is possible to use wireless remote controller at the same time.

4. It is possible to connect with Dry Contact and Central controller at the same time.
- The Master indoor unit is possible to recognize Dry Contact and Central Controller only.
- In case of Central controller and Group controller at the same time, it is possible to connect standard 2series indoor units or later since Feb. 2009.
- In case of Central controller setting, the Central controller can control indoor units after setting only the address of master indoor unit.
- Slave indoor unit will be operated like master indoor unit.
- Slave indoor unit can not be individually controlled by Central controller.
- Some remote controller can't perform with Dry Contact and Central controller at the same time. So contact us further information about it.

5. In case of any error occurs at indoor unit, display on the wired remote controller.
Exception of the error indoor unit, an individual indoor unit control possibility.

6. In case of Group Control, it is possible to use following functions.
- Selection of operation options (operation/stop/mode/set temperature)
- Control of flow rate (High/Middle/Low)
- It is not possible at some functions.

❉ Master/Slave setting of indoor units be set possible using a PCB Dip Switch.

❉ It is possible to connect indoor units since Feb. 2009.
In the other cases, please contact LGE.

❉ It can be the cause of malfuctions when there is no setting of master and slave.

2. Group Control 2

■ **Wired remote controllers + Standard Indoor Units**

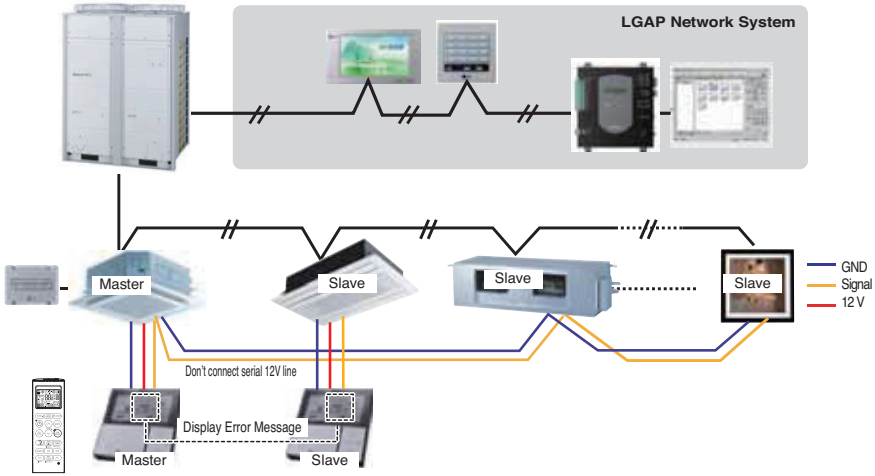

❉ **It is possible to control N indoor units by wired remote controller M units. (M+N≤17 Units)**
Set only one indoor unit to Master, set the others to Slave.
Set only one wired remote controller to Master, set the others to Slave.
Other than those, it is same with the Group Control 1.

3. Group Control 3

■ **Mixture connection with indoor units and Fresh Air Intake Unit**

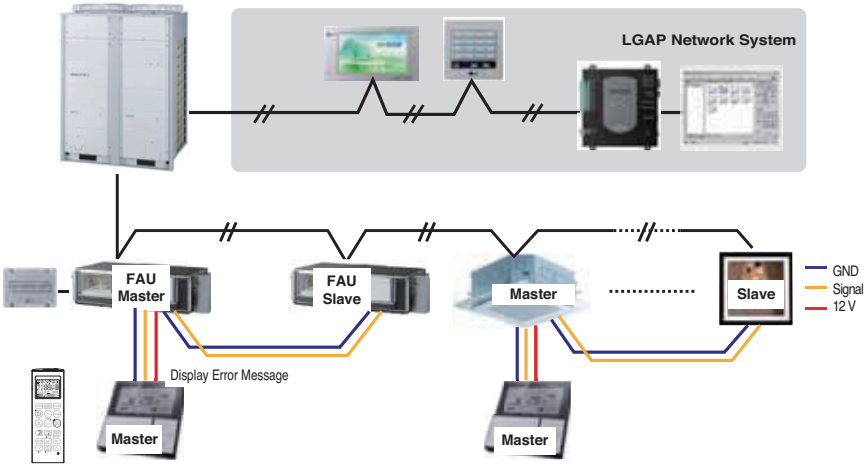

❊ **In case of connecting with standard indoor unit and Fresh Intake Unit, separate Fresh Air Intake Unit with standard units.**
(Because setting temperature are different.)

❊ **Other than those, it is same with Group Control 1.**



* FAU : Fresh Air Intake Unit
Standard: Standard Indoor Unit

4. 2 Remote Control

■ **Wired remote controller 2 + Indoor unit 1**

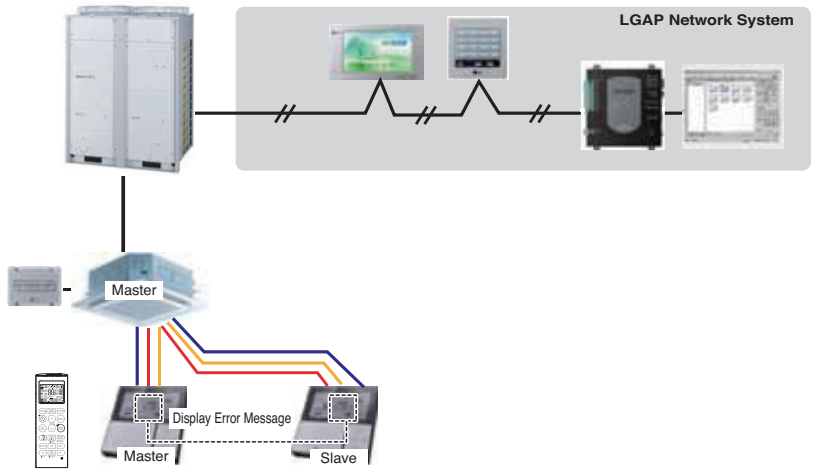

1. **It is possible to connect two wired remote controllers with one indoor unit.**
2. **Every types of indoor unit is possible to connect two remote controller.**
3. **It is possible to use wireless remote controller at the same time.**
4. **It is possible to connect with Dry Contact and Central controller at the same time.**
5. **In case of any error occurs at indoor unit, display on the wired remote controller.**
6. **There isn't limits of indoor unit function.**

❈ Maximum 2wired remote controllers can be connected with 1 indoor unit.

5. Accessories for group control setting

It is possible to set group control by using below accessories.

Indoor unit 2 EA +Wired remote controller	Indoor unit 1 EA +Wired remote controller 2EA
❊ PZCWRCG3 cable used for connection 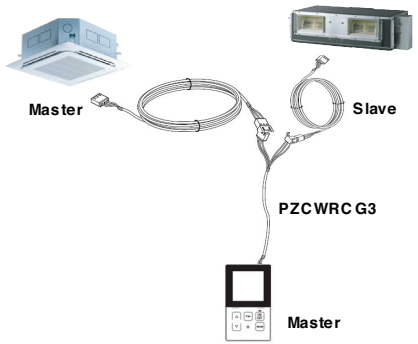	❊ PZCWRC2 cable used for connection 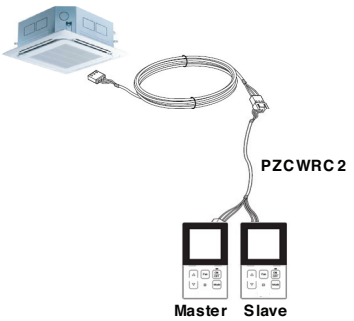

How to Set E.S.P?

A(C)RNU07GBHA2, A(C)RNU09GBHA2, A(C)RNU12GBHA2 A(C)RNU15GBHA2, A(C)RNU18GBHA2, A(C)RNU24GBHA2

(Unit: CMM)

Setting Value	Static Pressure(mmAq(Pa))								
	3(30)	4(40)	5(50)	6(60)	7(70)	8(80)	9(90)	10(100)	12(120)
70	2.7	-	-	-	-	-	-	-	-
80	5.3	-	-	-	-	-	-	-	-
90	7.8	6.1	3.6	2.9	-	-	-	-	-
100	10.2	8.1	6.0	3.8	3.3	-	-	-	-
110	12.6	11.6	8.8	7.3	5.9	4.2	-	-	-
120	15.7	14.2	11.9	10.1	8.4	6.5	5.0	4.4	-
130	17.9	16.5	15.5	13.2	11.8	9.6	7.6	6.1	4.3
140	20.5	19.0	17.6	16.1	15.3	13.0	12.1	10.3	5.8
145	21.4	19.9	19.3	17.5	16.1	14.4	13.6	11.1	7.9
150	22.5	21.3	19.9	18.9	17.6	16.0	14.3	13.9	10.3

A(C)RNU12GBGA2, A(C)RNU15GBGA2, A(C)RNU18GBGA2, A(C)RNU24GBGA2 A(C)RNU28GBGA2, A(C)RNU36GBGA2, A(C)RNU42GBGA2

(Unit: CMM)

Setting Value	Static Pressure(mmAq(Pa))											
	3(30)	4(40)	5(50)	6(60)	7(70)	8(80)	9(90)	10(100)	12(120)	14(140)	16(160)	18(180)
70	9.6	5.2	-	-	-	-	-	-	-	-	-	-
80	14.4	10.6	4.0	-	-	-	-	-	-	-	-	-
90	18.6	14.2	12.1	9.3	4.1	-	-	-	-	-	-	-
100	22.3	20.3	17.0	13.5	11.0	6.2	4.2	-	-	-	-	-
110	26.3	24.2	21.4	18.6	17.5	13.8	11.6	6.6	-	-	-	-
120	29.7	27.5	25.6	24.0	21.8	19.0	17.9	14.6	12.1	-	-	-
130	33.4	31.2	30.0	28.5	26.9	25.3	23.4	21.8	18.1	14.6	11.3	-
140	37.3	36.0	35.0	32.1	30.4	29.0	27.4	25.9	21.6	17.8	14.5	9.4
143	38.2	37.5	36.1	33.9	32.1	30.7	28.8	27.2	23.0	20.1	16.8	12.5
150	41.0	40.7	38.5	38.0	36.0	34.5	32.1	30.1	26.3	22.4	18.2	15.8
160	-	-	-	-	38.2	36.1	35.0	34.6	31.1	26.8	23.3	19.3

A(C)RNU28GBRA2, A(C)RNU36GBRA2, A(C)RNU42GBRA2, A(C)RNU48GBRA2 A(C)RNU54GBRA2

(Unit: CMM)

Setting Value	Static Pressure(mmAq(Pa))										
	5(50)	6(60)	8(80)	10(100)	12(120)	14(140)	15(150)	16(160)	17(170)	18(180)	20(200)
91	46.5	43.7	38.2	31.3	23.2	14.0	9.0	3.7	-	-	-
96	49.9	46.1	43.0	33.5	31.1	18.4	13.7	9.0	2.6	-	-
101	52.1	50.2	47.9	39.5	37.4	27.3	25.2	17.8	8.9	6.1	-
106	51.4	51.2	50.4	44.4	43.1	33.3	32.1	28.9	21.0	17.9	8.3
111	53.6	53.7	52.9	49.9	48.3	40.6	40.2	32.8	31.5	27.2	17.5
116	-	-	-	55.7	50.8	44.8	42.6	40.1	37.6	32.5	27.6
121	-	-	-	-	52.2	50.8	50.3	45.7	44.6	38.8	32.2
126	-	-	-	-	-	-	54.4	51.2	50.4	46.0	43.5

Note: 1. The above table shows the correlation between the air rates and E.S.P.

2. The following Models refer to the below Notice.
   A(C)RNU12GBGA2 / A(C)RNU15GBGA2 / A(C)RNU18GBGA2 / A(C)RNU24GBGA2 / A(C)RNU28GBRA2 / A(C)RNU36GBRA2 / A(C)RNU42GBRA2
   [Notice]
   1) The air flow of above model is increased by 20% depending on the Mode setting.
   2) Above modes are developed for high efficiency and high sensible heat.
      If you want to use Zone control, you have to set ESP Value.

A(C)RNU76GB8A2, A(C)RNU96GB8A2

(Unit: CMM)

Setting Value	Static Pressure(mmAq(Pa))								
	6(60)	9(90)	12(120)	15(150)	18(180)	20(200)	22(220)	23(230)	25(250)
60	40.5	-	-	-	-	-	-	-	-
65	52.7	-	-	-	-	-	-	-	-
70	63.7	47.1	-	-	-	-	-	-	-
75	71.1	56.9	44.7	-	-	-	-	-	-
80	76.3	69.7	55.2	-	-	-	-	-	-
85	83.3	78.6	67.4	55.9	-	-	-	-	-
91	89.7	87.1	78.9	67.6	54.2	-	-	-	-
95	-	-	86.1	77.0	66.4	50.6	30.0	-	-
100	-	-	88.3	84.9	75.9	69.5	60.8	43.1	-
105	-	-	88.3	84.9	81.1	77.4	69.2	67.9	51.3

Note: 1. The above table shows the correlation between the air rates and E.S.P.
2. Make sure to check the rated pressure outside machine and adjust E.S.P value after the installation of the product.Otherwise, there is a risk of weak cooling/heating and condensed water emission/dripping.


LG
Life's Good