# WALL MOUNT
# SOPORTE DE PARED
# FIXATION MURALE
# НАСТЕННЫЙ КРОНШТЕЙН

www.lg.com

WM-L163A

*MBM67558311*
(2605-REV03)

Printed in Korea
Imprimé en Corée

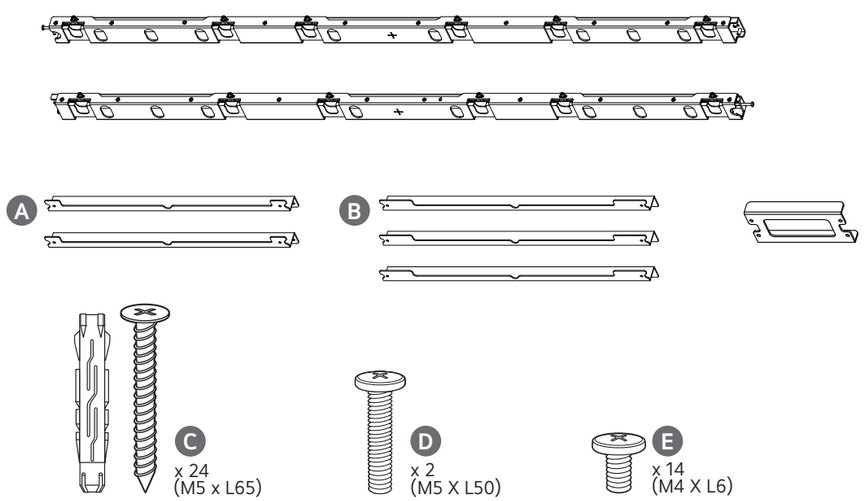


1

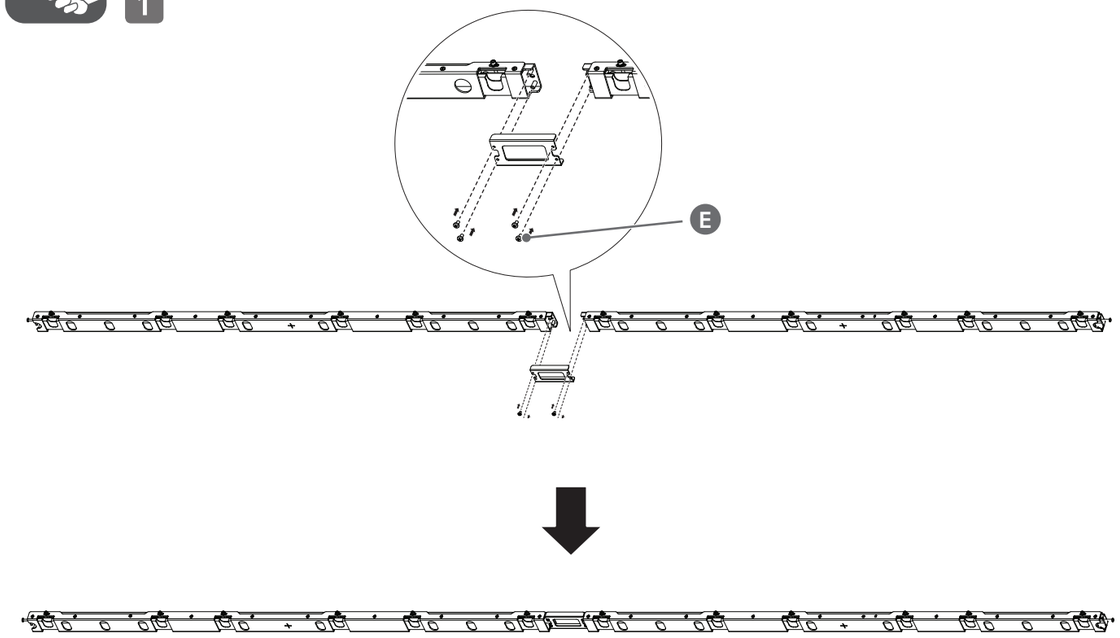


2

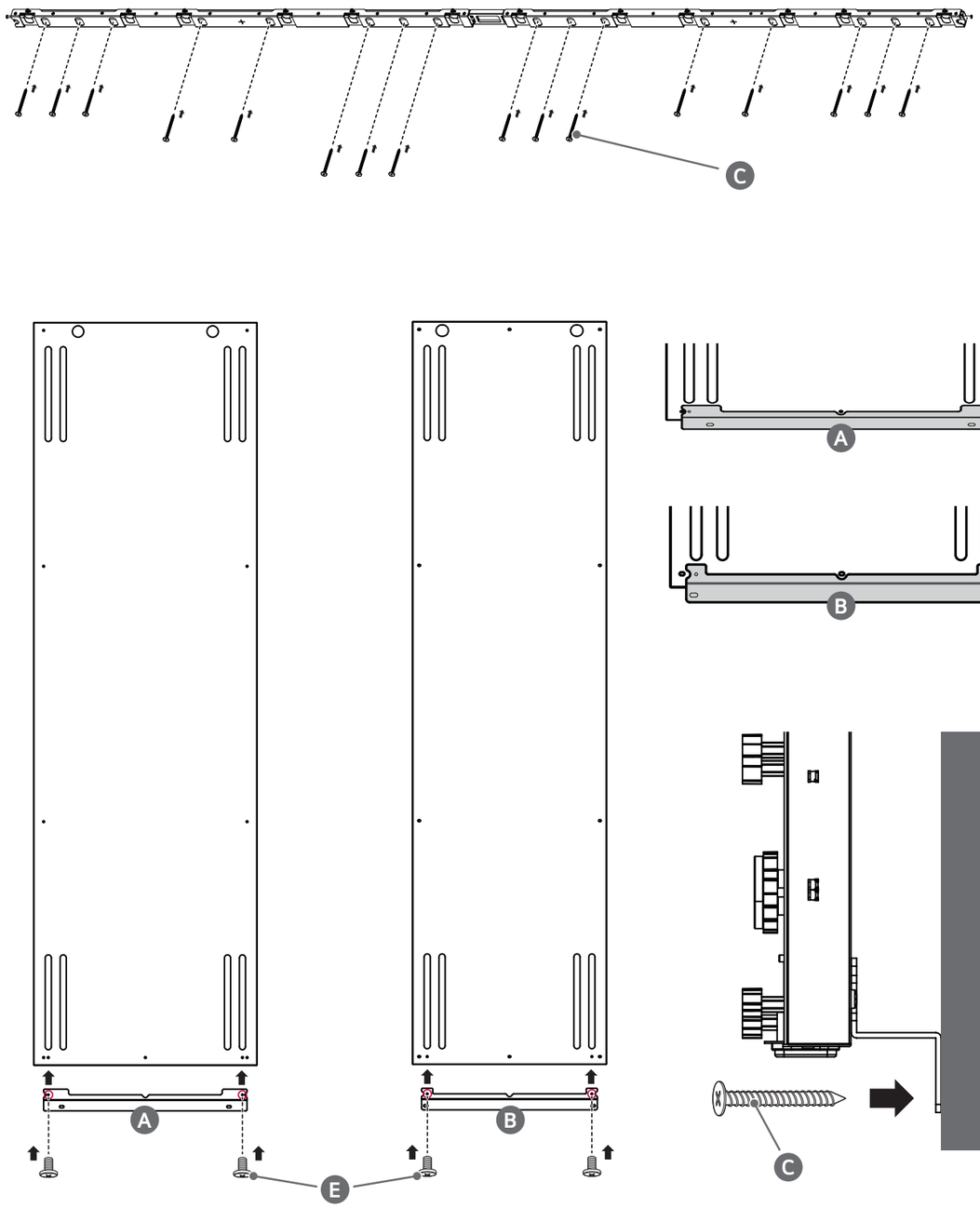

## 3

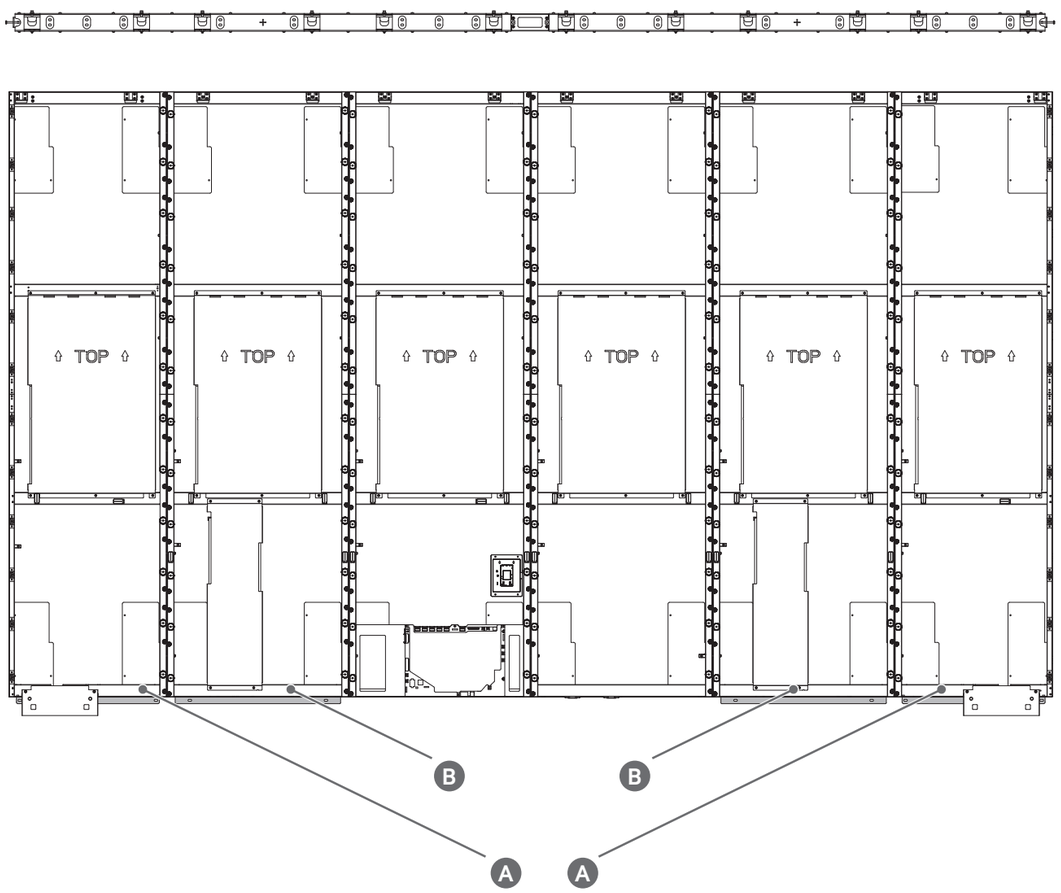


## 4

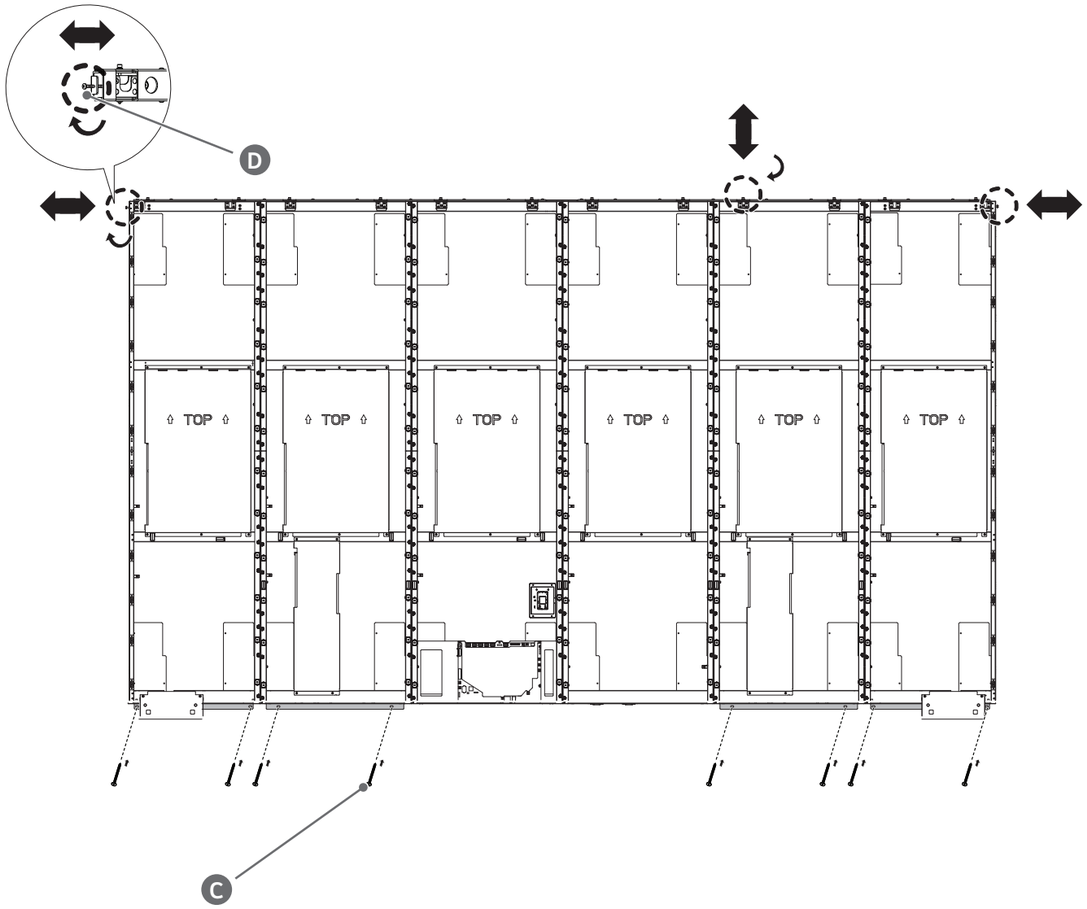


## India only

### Packaging Type Details as per PWM Rules

- **Brand Owner (LG Electronics India Ltd.)**

| Packaging type | Company name | Registration number | Thickness |
|---|---|---|---|
| Plastic Sheet | LG Electronics India Ltd | BO-13-000-07-AAACL1745Q-22 | 0.05 mm and above |
| Multilayered bag | LG Electronics India Ltd | | N/A |

- **Importer (LG Electronics India Ltd.)**

| Packaging type | Company name | Registration number | Thickness |
|---|---|---|---|
| Plastic Sheet | LG Electronics India Ltd | IM-13-000-07-AAACL1745Q-22 | 0.05 mm and above |
| Multilayered bag | LG Electronics India Ltd | | N/A |

## Australia only

- **This product must be installed by a professional installer.**
- **After the installation of the product in the customer premises, fully remove all product packaging (including any expanded or moulded plastic packaging materials) and recycle or dispose of such packaging responsibly. Do not dispose any expanded plastic packaging in the household bin.**