ENGLISH

www.lg.com

Copyright © 2026 LG Electronics Inc.
All Rights Reserved.

LED TV*

OWNER'S MANUAL

Safety and Reference

* LG LED TV applies LCD screen with LED backlights.

Please read this manual carefully before operating your set and retain it for future reference.

55NU800BPSB 98NU855BPSB
65NU800BPSB
75NU800BPSB
85NU800BPSB

The model and serial number of the product are located on the back and on one side of the product. Record them below in case you ever need service.

Model _____

Serial No. _____

MFL058492422607REV03

Important Safety Instruction

- Read these instructions.
- Keep these instructions.
- Heed all warnings.
- Follow all instructions.
- Do not use this apparatus near water.
- Clean only with dry cloth.
- Do not block any ventilation openings. Install in accordance with the manufacturer's instructions.
- Do not install near any heat sources such as radiators, heat registers, stoves, or other apparatus (including amplifiers) that produce heat.
- Do not defeat the safety purpose of the polarized or grounding-type plug. A polarized plug has two blades with one wider than the other. A grounding type plug has two blades and a third grounding prong. The wide blade or the third prong are provided for your safety. If the provided plug does not fit into your outlet, consult an electrician for replacement of the obsolete outlet.
- Protect the power cord from being walked on or pinched particularly at plugs, convenience receptacles, and the point where they exit from the apparatus.
- Only use attachments/accessories specified by the manufacturer.
- Use only with the cart, stand, tripod, bracket, or table specified by the manufacturer, or sold with the apparatus. When a cart is used, use caution when moving the cart/apparatus combination to avoid injury from tip-over.

- Unplug this apparatus during lightning storms or when unused for long periods of time.
- Refer all servicing to qualified service personnel. Servicing is required when the apparatus has been damaged in any way, such as power-supply cord or plug is damaged, liquid has been spilled or objects have fallen into the apparatus, the apparatus has been exposed to rain or moisture, does not operate normally, or has been dropped.

Before reading this manual

- Read this manual thoroughly before operating your TV, and keep it for future reference.
- On the website you can download the manual including installation, use, troubleshooting, specifications, license etc and view its contents on your PC or mobile device.
- **User Guide** : For more information about this TV, read the USER GUIDE embedded in the product. (Depending upon model)
  - ⊕ : This icon indicates that application may depend upon model in Quick Setup Guide.

Optional Extras

- Optional extras can be changed or modified for quality improvement without any notification. Contact your dealer for buying these items. These devices work only with certain models.
- The model name or design may be changed due to the manufacturer's circumstances or policies.
- Magic Motion Remote Control :

  Check whether your TV model supports Bluetooth in the Wireless Module Specification to verify whether it can be used with the Magic Motion Remote Control.
- A cable to connect antennas and external devices must be purchased separately.

Note

- Product specifications or contents of this manual may be changed without prior notice due to upgrade of product functions.
- The items supplied with your product may vary depending upon the model.
- Image shown may differ from your TV.

Warning! Safety instructions

CAUTION
RISK OF ELECTRIC SHOCK
DO NOT OPEN

CAUTION : TO REDUCE THE RISK OF ELECTRIC SHOCK, DO NOT REMOVE COVER (OR BACK). NO USER-SERVICEABLE PARTS INSIDE. REFER TO QUALIFIED SERVICE PERSONNEL.

This symbol is intended to alert the user to the presence of uninsulated "dangerous voltage" within the product's enclosure that may be of sufficient magnitude to constitute a risk of electric shock to persons.

This symbol is intended to alert the user to the presence of important operating and maintenance (servicing) instructions in the literature accompanying this apparatus.

WARNING : TO REDUCE THE RISK OF FIRE AND ELECTRIC SHOCK, DO NOT EXPOSE THIS PRODUCT TO RAIN OR MOISTURE.

- TO PREVENT THE SPREAD OF FIRE, KEEP CANDLES OR OTHER ITEMS WITH OPEN FLAMES AWAY FROM THIS PRODUCT AT ALL TIMES.
- **Do not place the TV and/or remote control in the following environments:**
  - Keep the product away from direct sunlight.
  - An area with high humidity such as a bathroom.
  - Near any heat source such as stoves and other devices that produce heat.
  - Near kitchen counters or humidifiers where they can easily be exposed to steam or oil.
  - An area exposed to rain or wind.
  - Do not expose to dripping or splashing and do not place objects filled with liquids, such as vases, cups, etc. on or over the apparatus (e.g., on shelves above the unit).
  - Near flammable objects such as gasoline or candles, or expose the TV to direct air conditioning.
  - Do not install in excessively dusty places.

  Otherwise, this may result in fire, electric shock, combustion/explosion, malfunction or product deformation.
- **Ventilation**
  - Install your TV where there is proper ventilation. Do not install in a confined space such as a bookcase.
  - Do not install the product on a carpet or cushion.
  - Do not block or cover the product with cloth or other materials while unit is plugged in.
- Take care not to touch the ventilation openings. When watching the TV for a long period, the ventilation openings may become hot.
- Protect the power cord from physical or mechanical abuse, such as being twisted, kinked, pinched, closed in a door, or walked upon. Pay particular attention to plugs, wall outlets, and the point where the cord exits the device.
- Do not move the TV while the Power cord is plugged in.
- Do not use a damaged or loosely fitting power cord.
- Be sure to grasp the plug when unplugging the power cord. Do not pull on the power cord to unplug the TV.
- Do not connect too many devices to the same AC power outlet as this could result in fire or electric shock.
- **Disconnecting the Device from the Main Power**
  - The power plug is the disconnecting device. In case of an emergency, the power plug must remain readily accessible.
- Do not let your children climb or cling onto the TV. Otherwise, the TV may fall over, which may cause serious injury.
- **Outdoor Antenna Grounding** (Can differ by country):
  - If an outdoor antenna is installed, follow the precautions below.

    An outdoor antenna system should not be located in the vicinity of overhead power lines or other electric light or power circuits, or where it can come in contact with such power lines or circuits as death or serious injury can occur.

    Be sure the antenna system is grounded to provide some protection against voltage surges and built-up static charges.

    Section 810 of the National Electrical Code (NEC) in the U.S.A. provides information with respect to proper grounding of the mast and supporting structure, grounding of the lead-in wire to an antenna discharge unit, size of grounding conductors, location of antenna discharge unit, connection to grounding electrodes and requirements for the grounding electrode.

    Antenna grounding according to the National Electrical Code, ANSI/NFPA 70
- Never touch this apparatus or antenna during a lightning storm. You may be electrocuted.
- Make sure the power cord is connected securely to the TV and wall socket. If not secured, damage to the Plug and socket may occur and in extreme cases a fire may break out.
- Do not insert metallic or inflammable objects into the product. If a foreign object is dropped into the product, unplug the power cord and contact the customer service.
- Do not touch the end of the power cord while it is plugged in. You may be electrocuted.

- **If any of the following occur, unplug the product immediately and contact your local customer service.**
  - The product has been damaged.
  - If water or another substance enters the product (like an AC adapter, power cord, or TV).
  - If you smell smoke or other odors coming from the TV
  - When lightning storms or when unused for long periods of time.

  Even when the TV is turned off by remote control or button, the unit remains connected to the AC power source if plugged in.
- Do not use high voltage electrical equipment near the TV (e.g., a bug zapper). This may result in product malfunction.
- Do not attempt to modify this product in any way without written authorization from LG Electronics. Accidental fire or electric shock can occur. Contact your local customer service for service or repair. Unauthorized modification could void the user's authority to operate this product.
- Use only authorized attachments / accessories approved by LG Electronics. Otherwise, this may result in fire, electric shock, malfunction, or product damage.
- Never disassemble the AC adapter or power cord. This may result in fire or electric shock.
- Handle the adapter carefully to avoid dropping or striking it. An impact could damage the adapter.
- To reduce the risk of fire or electrical shock, do not touch the TV with wet hands. If the power cord prongs are wet or covered with dust, dry the power plug completely or wipe dust off.
- **Batteries**
  - Store the accessories (battery, etc.) in a safe location out of the reach of children.
  - Do not short circuit, disassemble, or allow the batteries to overheat. Do not dispose of batteries in a fire. Batteries should not be exposed to excessive heat.
  - Caution: Risk of fire or explosion if the battery is replaced by an incorrect type.
- **Moving**
  - When moving, make sure the product is turned off, unplugged, and all cables have been removed. It may take 2 or more people to carry larger TVs. Do not press or put stress on the front panel of the TV. Otherwise, this may result in product damage, fire hazard or injury.
- Keep the packing anti-moisture material or vinyl packing out of the reach of children.
- Do not allow an impact shock or any objects to fall into the product, and do not drop anything onto the screen.
- Do not press strongly upon the panel with a hand or a sharp object such as a nail, pencil, or pen, or make a scratch on it. It may cause damage to screen.
- **Cleaning**
  - When cleaning, unplug the power cord and wipe gently with a soft/dry cloth. Do not spray water or other liquids directly on the TV. Do not clean your TV with chemicals including glass cleaner, any type of air freshener, insecticide, lubricants, wax (car, industrial), abrasive, thinner, benzene, alcohol etc., which can damage the product and/or its panel. Otherwise, this may result in electric shock or product damage.

Installation

Lifting and moving the TV

When moving or lifting the TV, read the following to prevent the TV from being scratched or damaged and for safe transportation regardless of its type and size.

- It is recommended to move the TV in the box or packing material that the TV originally came in.
- Before moving or lifting the TV, disconnect the power cord and all cables.
- When holding the TV, the screen should face away from you to avoid damage.
- Hold the top and bottom of the TV frame firmly. Make sure not to hold the transparent part, speaker, or speaker grille area.
- Use at least two people to move a large TV.
- When transporting the TV, do not expose the TV to jolts or excessive vibration.
- When transporting the TV, keep the TV upright; never turn the TV on its side or tilt towards the left or right.
- When handling the TV, be careful not to damage the protruding buttons.

⚠

- Avoid touching the screen at all times, as this may result in damage to the screen.
- Do not place the product on the floor with its front facing down without padding. Failure to do so may result in damage to the screen.
- When attaching the stand to the TV set, place the screen facing down on a cushioned table or flat surface to protect the screen from scratches.

Mounting on the Table

1 Lift and tilt the TV into its upright position on a table.
  - Leave a minimum of 10 cm space from the wall for proper ventilation, (Depending upon model).

2 Connect the power cord to a wall outlet.

⚠

- Do not apply foreign substances (oils, lubricants, etc.) to the screw parts when assembling the product. (Doing so may damage the product.)
- Do not use any unapproved items to ensure the safety and lifespan of the product.
- Any damages or injuries by using unapproved items are not covered by the warranty.
- If you install the TV on a stand, you need to take actions to prevent the product from overturning. Otherwise, the product may fall over, which may cause injury.
- When assembling the stand, ensure that all of the provided screws are attached. If the screws are not fully tightened, the product may tilt or tip over, resulting in damage. Tightening the screws with excessive force may cause them to come off due to abrasion of the screw joint.

Securing TV to the Wall

1 Insert and tighten the eye-bolts or TV brackets and bolts on the back of the TV.
   - If there are bolts inserted at the eye-bolts position, remove the bolts first.

2 Mount the wall brackets with the bolts to the wall. Match the location of the wall bracket and the eye-bolts on the rear of the TV.

3 Connect the eye-bolts and wall brackets tightly with a sturdy rope or cable. Make sure to keep the rope parallel to the flat surface.

- Use a platform or cabinet that is strong and large enough to support the TV securely.
- Brackets, bolts, and ropes are optional. You can obtain additional accessories from your local dealer.

Mounting to the Wall

Attach an optional wall mount bracket at the rear of the TV carefully and install the wall mount bracket on a solid wall perpendicular to the floor. When you attach the TV to other building materials, please contact qualified personnel. LG recommends that wall mounting be performed by a qualified professional installer. Please use a wall mount bracket where the device is adequately secured to the wall with enough space to allow connectivity to external devices. It is advised to connect all the cables before installing fixed wall mounts.

⚠

- Remove the stand before installing the TV on a wall mount by performing the stand attachment in reverse.
- For more information of screws and wall mount bracket, refer to manual included in the separately purchased wall mount.
- If you intend to mount the product to a wall, attach VESA standard mounting interface (optional parts) to the back of the product. When you install the set to use the wall mounting bracket (optional parts), fix it carefully so as not to drop.
- When mounting a TV on the wall, make sure not to install the TV by hanging the power and signal cables on the back of the TV.
- Do not install this product on a wall if it could be exposed to oil or oil mist. This may damage the product and cause it to fall.
- When installing the wall mounting bracket, it is recommended to cover the stand hole using tape, in order to prevent the influx of dust and insects. (Depending upon model)

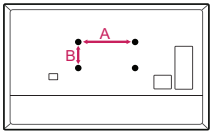

Model	55NU80* 65NU80*	75NU80*
VESA (A x B) (mm)	300 x 200	400 x 300
Standard screw	M6	M6
Number of screws	4	4
Wall mount bracket (optional)	Buy a suitable wall mount kit in the market by referring to this table for each model.	

Model	85NU80*	98NU85*
VESA (A x B) (mm)	400 x 300	600 x 400
Standard screw	M8	M8
Number of screws	4	4
Wall mount bracket (optional)	Buy a suitable wall mount kit in the market by referring to this table for each model.	

Antenna/Cable

Connect an antenna, cable, or cable box to watch TV while referring to the following. The illustrations may differ from the actual items and an RF cable is optional.

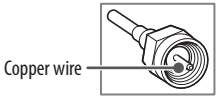

- Make sure not to bend the copper wire of the RF cable.
- Complete all connections between devices, and then connect the power cord to the power outlet to prevent damage to your TV.
- To improve the picture quality in a poor signal area, purchase a signal amplifier.
- Use a signal splitter to use 2 TVs or more.
- If the antenna is not installed properly, contact your dealer for assistance.
- This TV cannot receive Ultra HD (3840 x 2160 pixels) broadcasts directly because the related standards have not been confirmed (Depending upon country).

Starting TV

Turning on the TV

You can simply operate the TV functions, using the button.

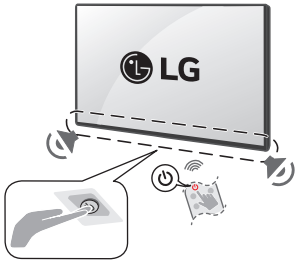

Power On (Press)
Power Off[1] (Press and Hold)
Menu Control (Press[2])
Menu Selection (Press and Hold[3])

1) All running apps will close, and any recording in progress will stop. (Depending upon country)
2) You can access and adjust the menu by pressing the button when TV is on.
3) You can use the function when you access menu control.

Note

- When the TV is turned on for the first time after being shipped from the factory, initialization of the TV may take approximately one minute.
- Your TV's OSD (On Screen Display) may differ slightly from that shown in this manual (Depending upon model).
- The device must be easily accessed to a location outlet near the access. Some devices are not made by turning on / off button, turning off the device and unplugging the power cord (Depending upon model).

Connections

You can connect various external devices to the TV. For more information on external device's connection, refer to the manual provided with each device.

HDMI

- When connecting the HDMI cable, the product and external devices should be turned off and unplugged.

Note

- If the device connected to Input Port also supports HDMI Deep Color, your picture may be clearer. However, if the device doesn't support it, it may not work properly. In that case, change the TV's [HDMI Deep Color] setting to off (Depending upon model).
- Use a certified cable with the HDMI logo attached. If you do not use a certified HDMI cable, the screen may not display or a connection error may occur.
- Recommended HDMI cable types (3 m or less)
  - Ultra High Speed HDMI®/™ cable

USB

Some USB Hubs may not work. If a USB device connected through a USB Hub is not detected, connect it directly to the USB port on the TV. (Depending upon model)

Note

- For an optimal connection, HDMI cables and USB devices should have bezels less than 10 mm thick and 18 mm width. (Depending upon model)
- Use an extension cable that supports USB 2.0 if the USB cable or USB flash drive does not fit into your TV's USB port.

External Devices

Supported external devices are: Blu-ray player, HD receivers, DVD players, VCRs, audio systems, USB storage devices, PC, gaming devices, and other external devices.

Note

- The external device connections shown may differ slightly from illustrations in a manual.
- In PC mode, there may be noise associated with the resolution, vertical pattern, contrast or brightness. If noise is present, change the PC output to another resolution, change the refresh rate to another rate or adjust the brightness and contrast on the [Picture] menu until the picture is clear. Depending upon the graphics card, some resolution settings may not allow the image to be positioned on the screen properly.

Specifications

Product specifications may be changed without prior notice due to upgrade of product functions.

Power requirement	AC 100-240 V~ 50/60 Hz

(Depending upon country)

Broadcasting Specifications	
Television system	Terrestrial / Cable / Satellites Digital TV
External antenna impedance	75 Ω

Environment Condition			
Operating Temperature	0 °C to 40 °C	Storage Temperature	-20 °C to 60 °C
Operating Humidity	Less than 80 %	Storage Humidity	Less than 85 %

- The energy information provided on the product is shown in accordance with the applicable regulations of each respective country, (Depending upon the country).
  - The Energy consumption was measured in accordance with IEC 62087.
- The actual energy consumption depends on the usage environment, (Example: content watched, TV settings, etc.).
- For information of the power supply and power consumption, refer to the label attached to the product.
  - The typical power consumption is measured in accordance with IEC 62087 or each country's energy regulations.
    - * On some models, the label is inside the external device connection terminal cover.
    - * Depending upon the model or country, the typical power consumption may not be on label.

Open Source Software Notice Information

To obtain the source code that is contained in this product, under GPL, LGPL, MPL, and other open source licenses that have the obligation to disclose source code, and to access all referred license terms, copyright notices, please visit *https://opensource.lge.com*.

LG Electronics will also provide open source code to you for a charge covering the cost of performing such distribution upon email request to opensource@lge.com.

This offer is valid to anyone in receipt of this information for a period of three years after our last shipment of this product.

Licenses

HDMI™
HIGH-DEFINITION MULTIMEDIA INTERFACE

HEVC Advance™
Covered by patents at patentlist.accessadvance.com

QuickSet®
(Magic Motion Remote Control supported models only)

Troubleshooting

In TV / HDMI input, press the button on the remote control three times to display the model name and serial number on the screen.

Cannot control the TV with the remote control.	• Check if anything such as tape has been placed over the receiver. • Check if there is any obstacle between the product and the remote control. • Replace the batteries with new fresh ones.
No image display and no sound is produced.	• Check if the product is turned on. • Check if the power cord is connected to a wall outlet. • Check if there is a problem in the wall outlet by connecting other products.
The TV turns off suddenly.	• Check the power control settings. The power supply may be interrupted. • Check if the auto-off function is activated on the settings related time. • The auto-off function may have worked. This product is equipped with an auto-off function that automatically turns off the power if the remote control is not used for 15 minutes without an input signal.
Abnormal Display	• If the product feels cold to the touch, there may be a small "flicker" when it is turned on. This is normal, there is nothing wrong with product. • This panel is an advanced product that contains millions of pixels. You may see tiny black dots and/or brightly colored dots (red, blue or green) at a size of 1 ppm on the panel. This does not indicate a malfunction and does not affect the performance and reliability of the product. This phenomenon also occurs in third-party products and is not subject to exchange or refund. • You may find different brightness and color of the panel depending upon your viewing position(left/right/top/down). This phenomenon occurs due to the characteristic of the panel. It is not related to the product performance, and it is not malfunction. • Avoid touching the screen or holding your finger(s) against it for long periods of time. Doing so may produce some temporary distortion effects on the screen. • Displaying a still image for a prolonged period of time may cause an image sticking. Avoid displaying a fixed image on the TV screen for a extended length of time.
Generated Sound	• **Cracking noise** A cracking noise that occurs when watching or turning off the TV is generated by plastic thermal contraction due to temperature and humidity. This noise is common for products where thermal deformation is required. • **Electrical circuit humming/panel buzzing** A low level noise is generated from a high-speed switching circuit, which supplies a large amount of current to operate a product. It varies depending upon the product. This generated sound does not affect the performance and reliability of the product.

⚠

- When cleaning the product, be careful not to allow any liquid or foreign objects to enter the gap between the upper, left or right side of the panel and the guide panel, (Depending upon model).
- Make sure to wring any excess water or cleaner from the cloth.
- Do not spray water or cleaner directly onto the TV screen.
- Make sure to spray just enough of water or cleaner onto a dry cloth to wipe the screen.

WARNING! (STABILITY HAZARD)

A television set may fall, causing serious personal injury or death. Many injuries, particularly to children, can be avoided by taking simple precautions such as:

- ALWAYS use cabinets or stands or mounting methods recommended by the manufacturer of the television set.
- ALWAYS use furniture that can safely support the television set.
- ALWAYS ensure the television set is not overhanging the edge of the supporting furniture.
- ALWAYS educate children about the dangers of climbing on furniture to reach the television set or its controls.
- ALWAYS route cords and cables connected to your television so they cannot be tripped over, pulled or grabbed.
- NEVER place a television set in an unstable location.
- NEVER place the television set on tall furniture (for example, cupboards or bookcases) without anchoring both the furniture and the television set to a suitable support.
- NEVER place the television set on cloth or other materials that may be located between the television set and supporting furniture.
- NEVER place items that might tempt children to climb, such as toys and remote controls, on the top of the television or furniture on which the television is placed.

If the existing television set is going to be retained and relocated, the same considerations as above should be applied.

Symbols

~	Refers to alternating current (AC).	⏻	Refers to stand-by.
⎓	Refers to direct current (DC).	|	Refers to "ON" (power).
⧈	Refers to class II equipment.	ϟ	Refers to dangerous voltage.

(Dominican Republic only)

Disposal of your old appliance

1 This crossed-out wheeled bin symbol indicates that waste electrical and electronic products (WEEE) should be disposed of separately from the municipal waste stream.

2 Old electrical products can contain hazardous substances so correct disposal of your old appliance will help prevent potential negative consequences for the environment and human health. Your old appliance may contain reusable parts that could be used to repair other products, and other valuable materials that can be recycled to conserve limited resources.

3 You can take your appliance to any of the authorized centers for collection, If you want to know an updated list of countries that have this service, visit the page *https://www.lg.com/global/take-back-recycling-global-network-south-america*

(Jamaica only)

(Depending upon model)

This product contains a Type Approved Module by Jamaica: SMA - LGSWNAC62

This product contains a Type Approved Module by Jamaica: SMA - SKI.WB822EU.12

(Image shown may differ from your TV.)

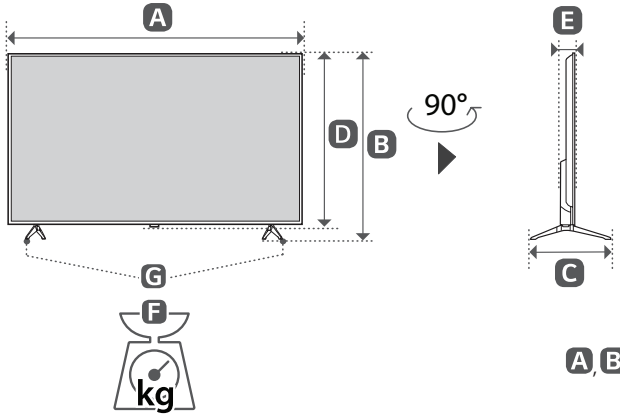

A, B, C, D, E : mm
F, G : kg

Model	A	B	C	D	E	F	F-G	Power consumption
55NU800BPSB	1226	766	275	711	71	8.8	8.6	122 W
65NU800BPSB	1445	894	309	834	71	12.5	12.3	130 W
75NU800BPSB	1667	1037	390	960	71	18.6	18.3	163 W
85NU800BPSB	1890	1164	390	1086	72.5	23.7	23.4	213 W
Power requirement					AC 100-240 V~ 50/60 Hz			

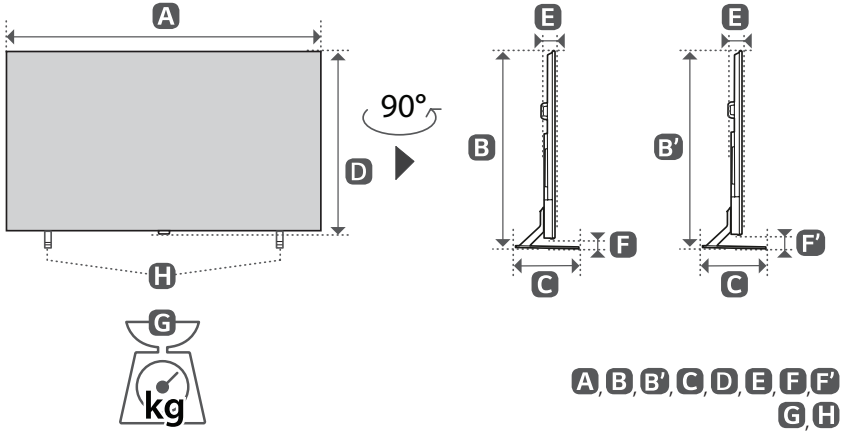

A, B, B', C, D, E, F, F' : mm
G, H : kg

Model	A	B/B'	C	D	E	F/F'	G	G-H	Power consumption
98NU855BPSB	2184	1304/1346	432	1252	74.5	52/94	52.8	50	465 W
Power requirement					AC 100-240 V~ 50/60 Hz				

Using Magic Motion Remote Control

Short press

Basic Guide

	Power: Turns the TV On or Off.
	Select **Custom Menu**. (Set the key to the user's preference such as Mute/Input/HDMI)
	Displays the **Home Hub**.
	Accesses the **TV Guide**.
	Check for recommended content. (Some recommended services may not be available in some countries.)
	Displays the **Home Menu**.
	Displays more remote control functions.
❶	**Press** to select menu and operate device. (play/pause, etc.) **Scroll up and down** Scrolls the screen or change channels.
❷	**Up, Down, Left, Right** Navigation buttons.
	Move to the **Previous Step**.
	Displays the **Quick Settings Menu**.
❸	Various content service buttons.

Microphone

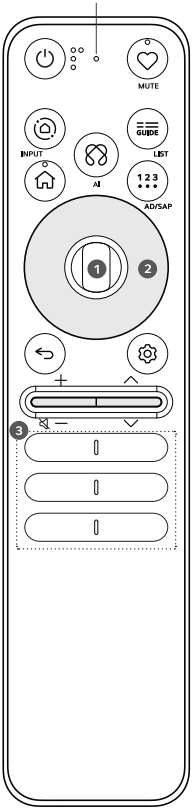

Long press

Extension Guide

	Accesses the **Accessibility Shortcuts**.
	Changes the **Input Source**.
	Accesses the saved **Channels List**.
	Speak to the remote control while pressing and holding the button to use the **Voice Recognition** feature.
	To enable the **Screen Zoom**.
	Enables **SAP** (Second Audio Program) Feature.
	The screen displayed on the TV is closed and the **Home Menu** appears.
	Displays the **All Settings Menu**.

+ / —	Push up and down to **Adjust the Volume**.
	Push down long press to **Mute**.
∧ / ∨	Push up and down to **Change Channels**.

Note

- The terms in this manual are used in general terms to help users understand and may not match the terms displayed on the screen.

The descriptions in this manual are based on the buttons on the remote control. Please read this manual carefully and use the TV correctly.

This remote uses infrared light. When in use, it should be pointed in the direction of the TV's remote sensor.

(Some buttons and services may not be provided depending upon models or regions.)

How to register the Magic Motion Remote Control

To use the Magic Motion Remote Control, first pair it with your TV.

1 Put batteries into the Magic Motion Remote Control and turn the TV on.

2 Point the Magic Motion Remote Control at your TV and press the **Wheel (OK)** on the remote control.

* If the TV fails to register the Magic Motion Remote Control, try again after turning the TV off and back on.

How to deregister the Magic Motion Remote Control

Press the **(Back)** and **(Home)** buttons at the same time, for five seconds, to unpair the Magic Motion Remote Control with your TV.

* Press and hold the **(Home)** and **(Q. Settings)** buttons for more than 5 seconds to disconnect and re-register the Magic Motion Remote Control at the same time.

⚠

- It is recommended that an Access Point (AP) be located more than 0.2 m away from the TV. If the AP is installed closer than 0.2 m, the Magic Motion Remote Control may not perform as expected due to frequency interference.

Using Always Ready

(Depending upon model)

You can operate the TV and connect to Bluetooth with direct voice recognition while the power is off.

* Pressing the **(Power)** button while watching TV switches the screen to [Always Ready] that is turned on, and pressing the **(Power)** button once more turns the screen to [Always Ready] that is turned off.

* Press the **(Home)** button or the **(Back)** button to watch TV when the screen is in [Always Ready] that is turned on.

* Press the **Wheel (OK)** button to display the wallpaper when the screen is in [Always Ready] that is turned off, and press the **(Power)** button to watch TV.

Note

- Using Always Ready may increase energy consumption.

Regulatory

Jamaica

This product has been Type Approved by Jamaica SMA-MR26GA /

This product has been Type Approved by Jamaica SMA-LGMR1

Paraguay

MR26GA

CONATEL

NR:2025-08-I-0536

LGMR1

CONATEL

NR:2026-06-I-0434

Using Remote Control

Short press

Basic Guide

- **Power**: Turns the TV on or off.
- Changes the **Input Source**.
- Displays the **Home Hub**.
- Recalls your preferred **Subtitle** in digital mode.
- Enables **SAP** (Second Audio Program) Feature.
- Displays the **Quick Settings Menu**.
- Inserts a — between numbers such as 2-1 and 2-2.
- GUIDE Displays the channel event according to time scheduler.
- Displays more remote control functions.
- **Mutes** all sounds.
- **Search**: Check recommended content (Depending upon country) and run search mode.
- You can watch **TV** Channels.
- ❶ Various content service buttons.
- Displays the **Home Menu**.
- ❷ Scrolls through menus or options.
- Move to the **Previous Step**.
- Closes the current app and goes to the **Home Menu**.
- Accesses the saved **Channels List**.
- Shows **User Guide**.
- ❸ Control buttons for media contents.
- ❹ These access special functions in some menus.

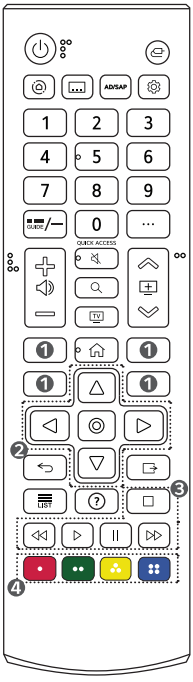

Long press

Extension Guide

- Displays the **Home Hub**.
- Changes the **Input Source**.
- Displays the **All Settings Menu**.
- Accesses the **Quick Help**.
- Accesses the **Edit Quick Access**.
- Accesses the saved **Channels List**.
- Enables **SAP** (Second Audio Program) Feature.
- Accesses the **Accessibility Shortcuts**.
- To enable the **Screen Zoom**.
- Closes the current app and goes to the **Home Menu**.
- Accesses the **TV Guide**.
- Runs the record function.

- + / — Adjusts the **Volume Level**.
- ∧ / ∨ Scrolls through the saved **Channels**.

Note

- The terms in this manual are used in general terms to help users understand and may not match the terms displayed on the screen.
- The descriptions in this manual are based on the buttons on the remote control. Please read this manual carefully and use the TV correctly. (Some buttons and services may not be provided depending upon models or regions.)