LG
Life's Good

MFL71984612230 1REV00

UR73*

www.lg.com

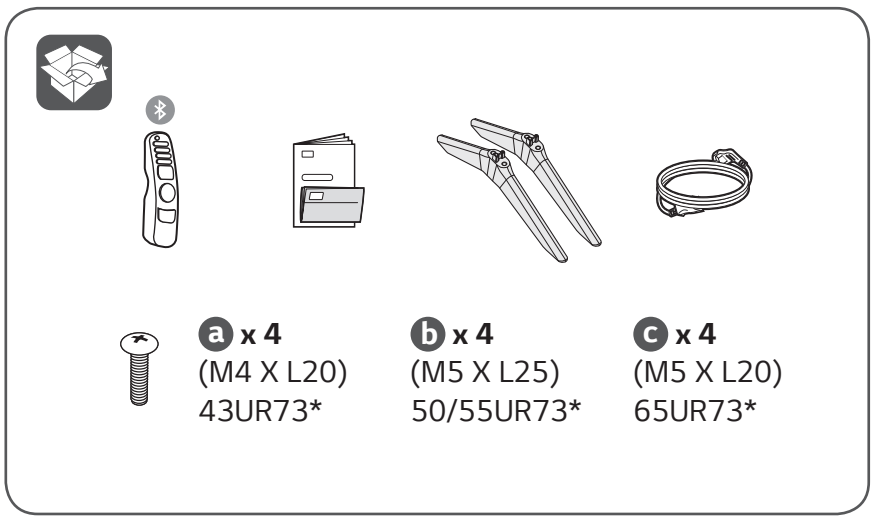

43/50/55UR73*

1

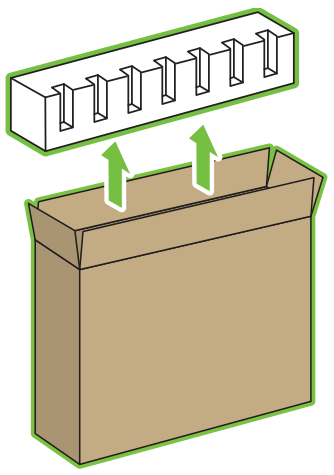

2

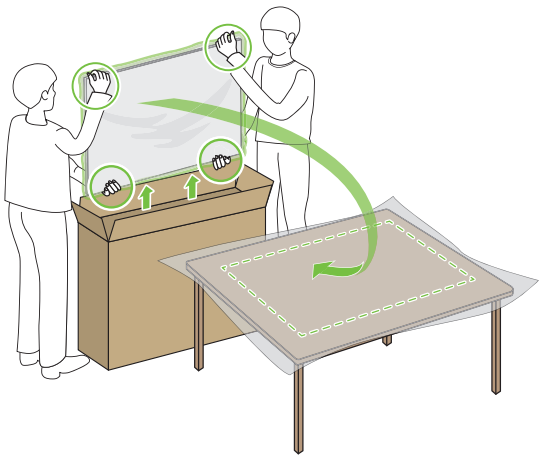

3

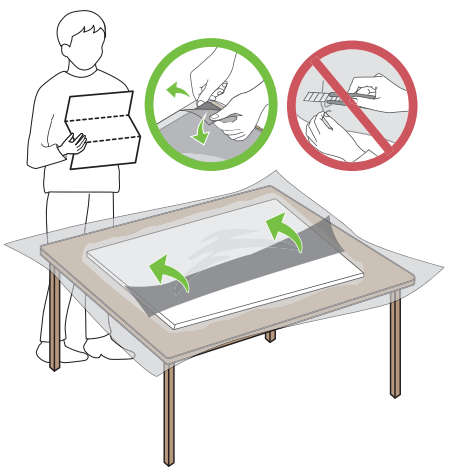

65UR73*

1

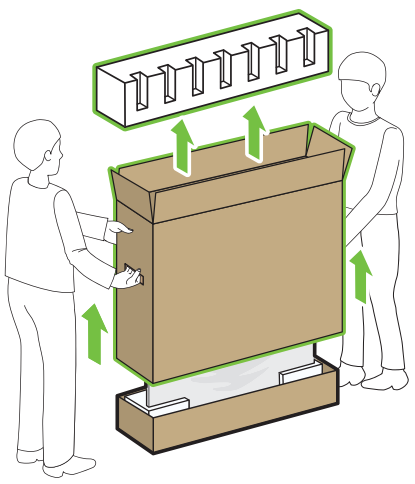

2

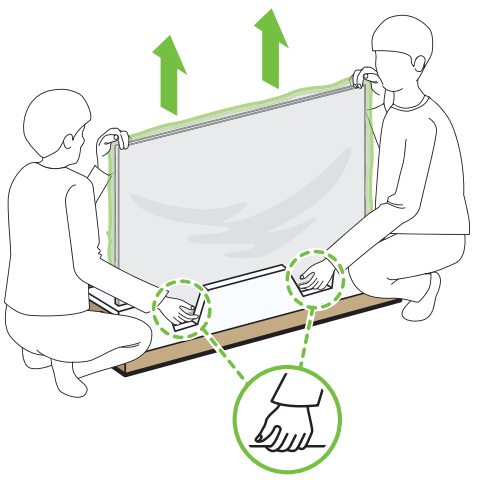

3

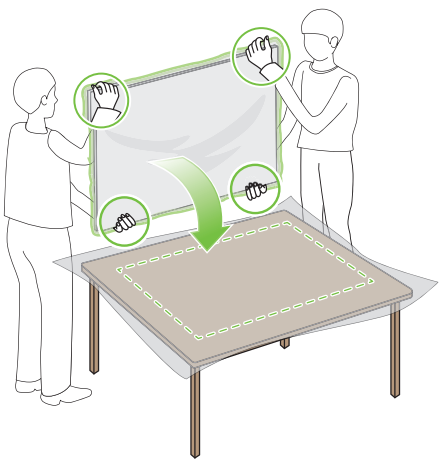

4

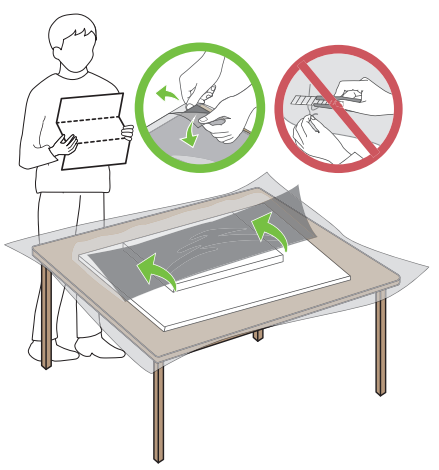

1

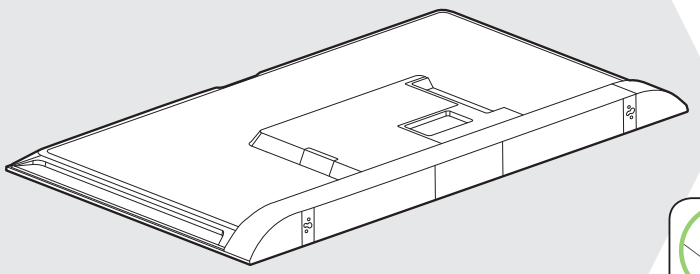

2

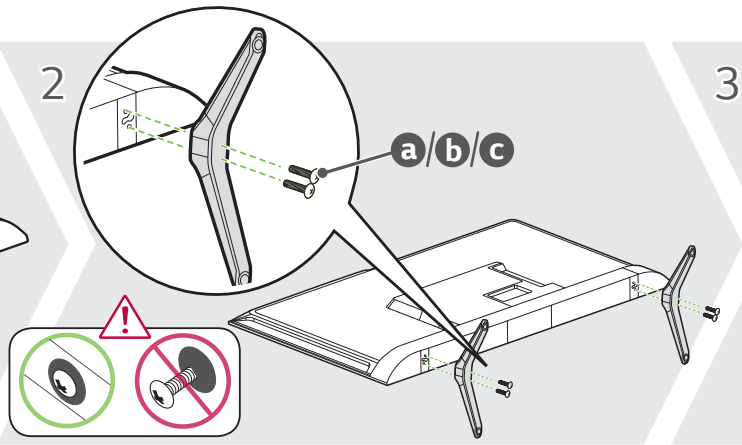

3

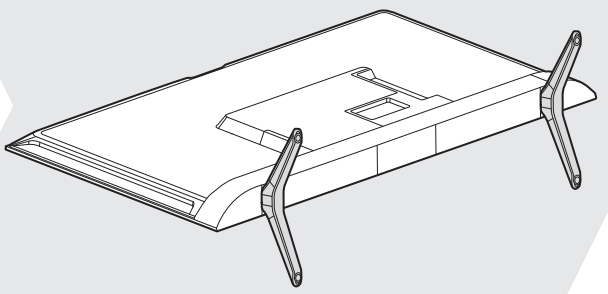

4

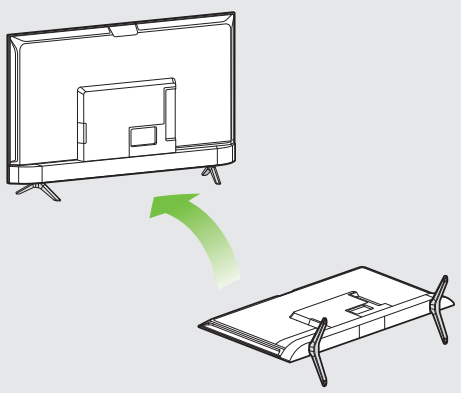

5

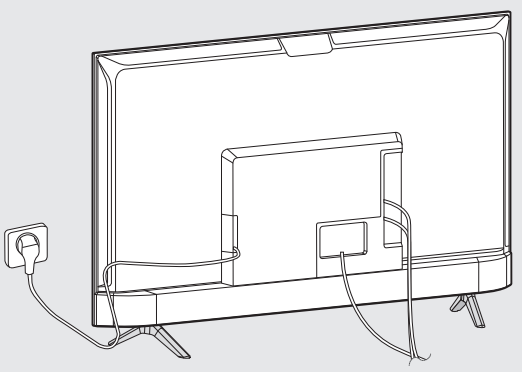

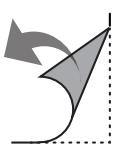

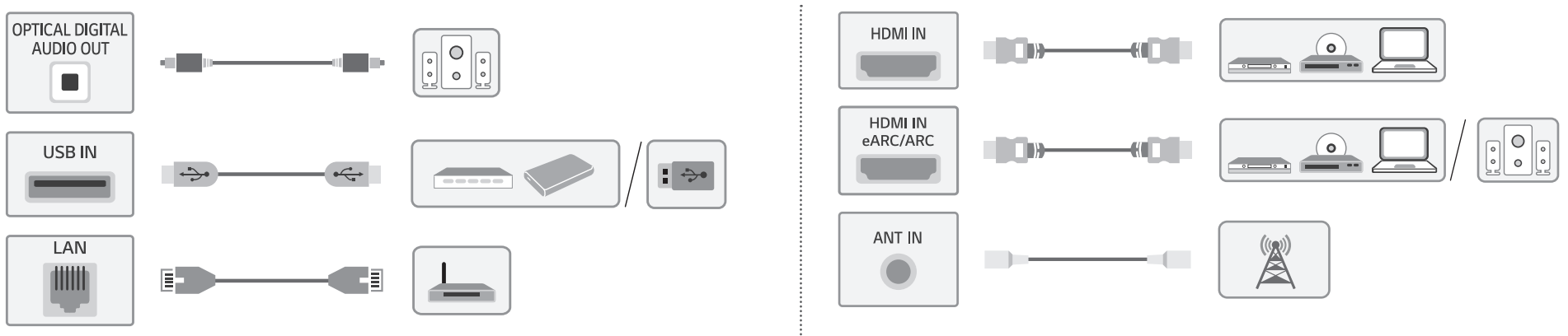

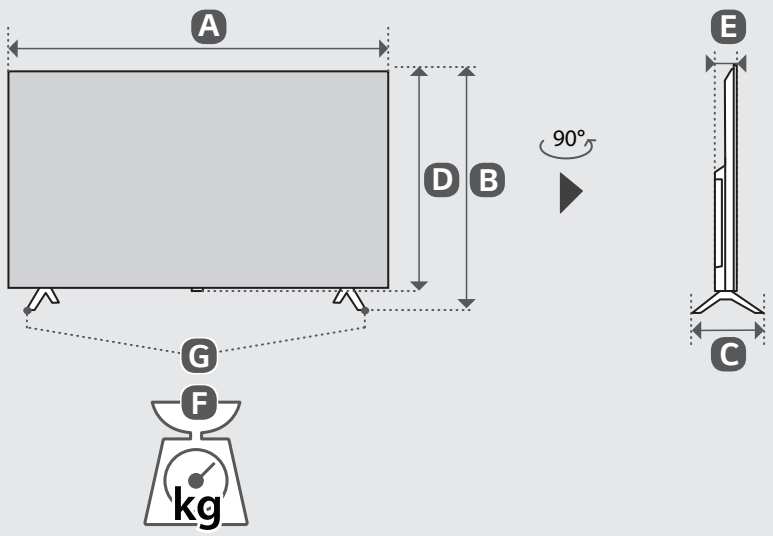

	A	B	C	D	E	F	F-G
	(mm)					(kg)	
43UR73006LA	957	609	229	559	79.2	6.9	6.8
50UR73006LA	1111	711	287	645	80.5	9.7	9.6
55UR73006LA	1226	777	287	712	80.5	11.0	10.9
65UR73006LA	1446	905	341	834	80.8	17.1	16.8