LG
Life's Good

OWNER'S MANUAL

LG Digital Signage

(MONITOR SIGNAGE)

Please read this manual carefully before operating your set and retain it for future reference.

43SH7E	32SM5E	32SM5KE
49SH7E	43SM5E	43SM5KE
55SH7E	49SM5E	49SM5KE
	55SM5E	55SM5KE

www.lg.com

Copyright © 2018 LG Electronics Inc. All Rights Reserved.

ENGLISH

TABLE OF CONTENTS

IMPORTANT PRECAUTIONS.....3

- Electrical Power Related Precautions.....3
- Precautions In Installing the Product.....5
- Precautions for Moving the Product.....6
- Precautions for Using/Cleaning the Product.....7
- Product Disposal (Only, Hg lamp used LCD Monitor).....7

LICENSES.....8

ASSEMBLY AND PREPARATION ..9

- Optional Accessories.....9
- Parts and Buttons.....11
- Assembling the Memory Cover.....12
- Connecting the Stand.....13
- Connecting the Speakers.....15
- Connecting the IR Sensor.....18
- Portrait Layout.....19
- Attaching and removing the LG Logo Bracket.....20
- Installing on a Wall.....22

REMOTE CONTROL 24

MAKING CONNECTIONS..... 26

- Connecting to a PC.....26
- External Device Connection.....26
- Using the Input List.....28

TROUBLESHOOTING..... 29

PRODUCT SPECIFICATIONS..... 32

WARNING: This equipment is compliant with Class A of CISPR 32. In a residential environment this equipment may cause radio interference.

IMPORTANT PRECAUTIONS

Please read these safety precautions carefully before using the product.

⚠ WARNING

Failure to follow those warnings may result in death, serious injury or damage to the product or other property.

⚠ CAUTION

If you ignore the caution message, you may be slightly injured or the product may be damaged.

⚠ WARNING

- Indoor Use Only.

Electrical Power Related Precautions

⚠ WARNING

- Use only the power cord supplied with the unit or another manufacturer's authorized cord.
  - Failure to do so may result in fire or electrical shock or damage to the product.
- Use only a properly grounded plug and receptacle.
  - If you do not you may be electrocuted or injured. Or the product might be damaged.
- Do not use a damaged or loose plug.
  - This may cause electrical shock or fire.
- Operate the display only from a power source(i.e. voltage) indicated in the product specification.
  - Otherwise the product can be damaged, fire can occur or you may be electrocuted. If you are not sure what type of power supply you have, consult a certified electrician.
- In the presence of thunder and lightning, never touch the power cord and signal cable because it can be very dangerous.
  - It can cause electric shock.
- Do not connect several extension cords, electrical appliances or electrical heaters to a single outlet. Use a power strip with a grounding terminal designed for exclusive use with the computer.
  - A fire can break out due to overheating.
- Do not touch the power plug with wet hands. Additionally, if the cord pin is wet or covered with dust, dry the power plug completely or wipe dust off before plugging in the cord.
  - You may be electrocuted due to excess moisture.

- If you don't intend to use the product for a long time, unplug the power cable from the product.
  - Layers of dust can cause a fire, or insulation deterioration can cause electric leakage, electric shock or fire.
- Insert the power plug firm so it cannot come loose.
  - A loose connection can cause fire.
- Hold the plug when pulling out the power cable. Do not pull the plug out by the wire. Do not bend the power cord with excessive force or put heavy objects on the power cord.
  - The power line can be damaged, which may cause electric shock or fire.
- Do not insert metal or other conductive materials into the product openings. Additionally, do not touch the power cable right after plugging into the wall input terminal.
  - You may be electrocuted.
- Use an appliance coupler as a disconnect device.
- Please make sure the device is installed near the wall outlet to which it is connected and that the outlet is easily accessible.
- Do not unplug the power cord while the product is in use.
  - Electrical shock can damage the product.
- As long as this unit is connected to the AC wall outlet, it is not disconnected from the AC power source even if the unit is turned off.

Precautions In Installing the Product

⚠ WARNING

- Keep away from heat sources like heaters or open flames.
  - Electrical shock, fire, malfunction or deformation may occur.
- Keep the packing anti-moisture material or vinyl packing out of the reach of children.
  - Anti-moisture material is harmful if swallowed. If swallowed by mistake, force the patient to vomit and visit the nearest hospital. Additionally, vinyl packing can cause suffocation. Keep it out of the reach of children.
- Do not put heavy objects on the product or sit upon it.
  - If the product collapses or is dropped, you may be injured. Prevent Children from climbing or pulling on the unit.
- Do not leave the power or signal cable where someone can trip over it.
  - Pedestrians may become entangled in the cables and cause the device to become damaged causing electrical shock, fire, or serious injury.
- Install the product in a neat and dry place. Do not use near water.
  - Dust or moisture can cause electrical shock, fire or product damage.
- Do not add accessories that have not been designed for this display.
- If you smell smoke or other odors or hear a strange sound from the product unplug the power cord and contact LG Customer Service.
  - If you continue to use without taking proper measures, electrical shock or fire can occur.
- If you dropped the product or the case is broken, turn off the product and unplug the power cord.
  - If you continue to use without taking proper measures, electrical shock or fire can occur. Contact LG Customer Service.
- Do not drop an object on or apply impact to the product. Do not throw any toys or objects at the product.
  - It can cause injury to humans, problems to the product and damage the display.
- Keep out of reach of children and do not place toys near the product.
- Make sure the product ventilation hole is not blocked. Install the product more than 100 mm (3.9 inches) from the wall.
  - If you install the product too close to the wall, it may be deformed or fire can break out due to internal heat build-up.
- Do not cover the product with cloth or other material (eg. plastic) while plugged in.
  - The product can be deformed or fire can break out due to internal overheating.
- Place the product on a flat and stable surface that is large enough to support the product.
  - If the product is dropped, you may be injured or the product may be broken.
- Install the product where no Electromagnetic Interference occurs.
- Keep the product away from direct sunlight.
  - The product can be damaged.
- Do not place the product on the floor.
  - Small Children and others may trip over it.
- Do not install this product on a wall if it could be exposed to oil or oil mist.
  - This may damage the product and cause it to fall.
- For displays with glossy bezels the user should consider the placement of the display as the bezel may cause unwanted reflections from surrounding light and bright surfaces.

Precautions for Moving the Product

⚠ WARNING

- Make sure to turn off the product.
  - You may be electrocuted or the product can be damaged.
- Make sure to remove all cables before moving the product.
  - You may be electrocuted or the product can be damaged.
- When lifting or moving the product, do not hold it upside down while holding only the stand.
  - This may cause the product to fall resulting in damage or injury.
- Do not shock the product when moving it.
  - You may be electrocuted or the product can be damaged.
- Make sure the panel faces forward and hold it with both hands to move.
  - If you drop the product, the damaged product can cause electric shock or fire.
- Do not place the product face down.
  - This may damage the TFT-LCD screen.

Precautions for Using/Cleaning the Product

⚠ WARNING

- Do not attempt to disassemble, repair or modify the product yourself.
  - Fire or electric shock can occur.
  - Contact LG Customer Service for repair.
- When cleaning the product, unplug the power cord and scrub gently with a soft cloth to prevent scratching. Do not clean with a wet cloth or spray water or other liquids directly onto the product. An electric shock may occur. (Do not use chemicals such as benzene, paint thinners or alcohol.)
- Keep the product away from water.
  - Fire or electric shock accident can occur.
- Avoid high temperatures and humidity.
- Do not put or store flammable substances near the product.
  - There is a danger of explosion or fire.
- Keep the product clean at all times.
- Take a comfortable and natural position when working with the product.
- Take a regular break when working with the product for a long time.
- Do not press on the panel with a hand or sharp object such as nail, pencil or pen, or make a scratch on it.
- Keep proper distance from the product and rest from time-to-time.
  - Your vision may be impaired if you look at the product too closely or for too long.
- Set the appropriate resolution by referring to the User's Guide.
- Keep small accessories out of the reach of children.
- Displaying a still image for long time on the monitor may leave persistent image or stain on the monitor screen. To avoid this problem, use a screen saver and power off when this product is not used. Persistent image or stain caused by long time usage are not covered by the warranty on this product.
- Do not use products using high voltage around the Monitor. (ex. Electrical Swatter)
  - Monitor may have malfunction as its electrical shock.
- Spray water onto a soft cloth 2 to 4 times, and use it to clean the front frame;wipe in one direction only. Too much moisture may cause staining.

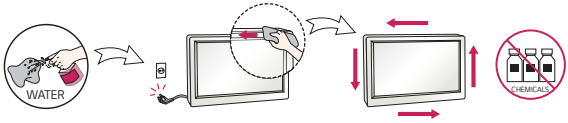

Product Disposal (Only, Hg lamp used LCD Monitor)

- The fluorescent lamp used in this product contains a small amount of mercury.
- Do not dispose of this product with general household waste.
- Disposal of this product must be carried out in accordance to the regulations of your local authority.

LICENSES

Supported licenses may differ by model. For more information of the licenses, visit *www.lg.com*.



The terms HDMI and HDMI High-Definition Multimedia Interface, and the HDMI Logo are trademarks or registered trademarks of HDMI Licensing Administrator, Inc. in the United States and other countries.

Manufactured under license from Dolby Laboratories. Dolby, Dolby Vision, Dolby Audio, Dolby Atmos, and the double-D symbol are trademarks of Dolby Laboratories.

For DTS patents, see *http://patents.dts.com*. Manufactured under license from DTS Licensing Limited. DTS, the Symbol, & DTS and the Symbol together, DTS 2.0 Channel, DTS 2.0+Digital Out, DTS-HD, and DTS Virtual:X are registered trademarks or trademarks of DTS, Inc. in the United States and/or other countries. © DTS, Inc. All Rights Reserved.

ASSEMBLY AND PREPARATION

⚠ CAUTION

- Always use genuine components to ensure safety and product performance.
- The product warranty will not cover damage or injury caused by the use of counterfeit components.

NOTE

- The accessories provided with your product may vary depending on the model or region.
- Product specifications or contents in this manual may be changed without prior notice due to upgrade of product functions.
- SuperSign Software & Manual
  - Downloading from the LG Electronics website.
  - Visit the LG Electronics website (*http://partner.lge.com*) and download the latest software for your model.
- The warranty will not cover any damage caused by using the product in an excessively dusty environment.

Optional Accessories

Without prior notice, optional accessories are subject to change to improve the performance of the product, and new accessories may be added. The illustrations in this manual may differ from the actual product and accessories.

Stand kit

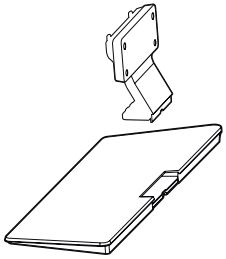





Stand

ST-322T	32SM5*
ST-432T	43SH7E, 43SM5*
ST-492T	49SH7E, 49SM5* 55SH7E, 55SM5*

Stand Spacers

32SM5*	-
43SH7E 43SM5* 49SH7E 49SM5* 55SH7E 55SM5*	2 EA

Screws

Diameter 4.0 mm (0.1 inches) x Pitch 0.7 mm (0.02 inches)

Model	Length (including spring washer)	Quantity
32SM5*	10 mm (0.3 inches)	6 EA
43SH7E 43SM5* 49SH7E 49SM5* 55SH7E 55SM5*	14 mm (0.5 inches)	8 EA

Speaker kit
(Only for **SM5E model)

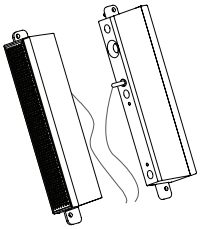

Speakers
SP-5000



Cable holder/ Cable Tie



Screws
Diameter 4.0 mm (0.1 inches) x Pitch 0.7 mm (0.02 inches) x Length 8 mm (0.3 inches) (including spring washer)

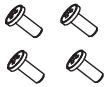

Screws
Diameter 4.0 mm (0.1 inches) x Pitch 1.6 mm (0.06 inches) x Length 10 mm (0.3 inches)

Media Player kit

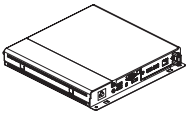

Media Player
MP500/ MP700



Screws
Diameter 3.0 mm (0.1 inches) x Pitch 0.5 mm (0.01 inches) x Length 6 mm (0.2 inches)



CD (Owner's Manual)/ Cards

OPS kit

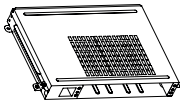

KT-OPSA



Screws
Diameter 3.0 mm (0.1 inches) x Pitch 0.5 mm (0.01 inches) x Length 8 mm (0.3 inches)

NOTE

- Cable holder/cable tie may not be available in some areas or for some models.
- Optional accessories are available for some models. If necessary, please purchase them separately.
- Before you attach the OPS kit or Media Player, connect the cable to the port.

Parts and Buttons

The image may be different according to the model.

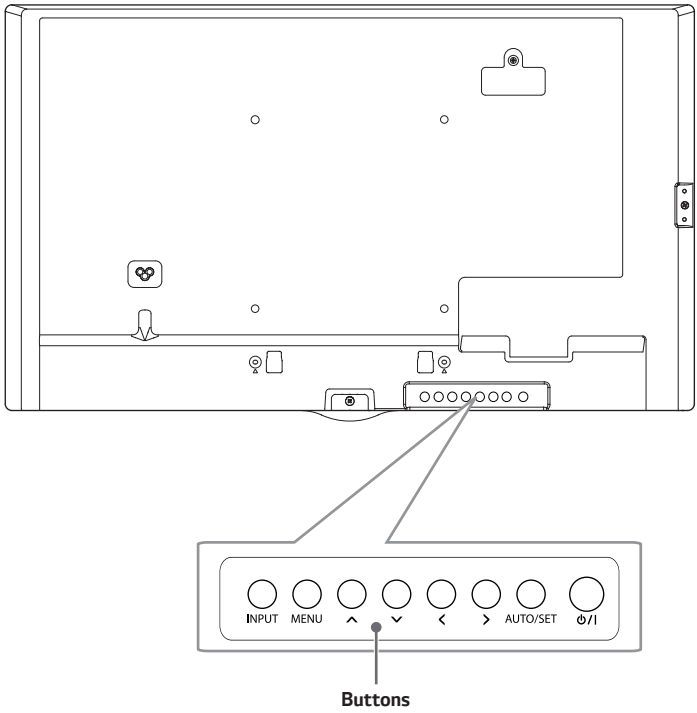

- **INPUT** : Changes the input source.
- **MENU** : Accesses the main menus, or saves your input and exits the menus.
- ∧∨ : Adjust the up and down.
- < > : Moves left and right.
- **AUTO/SET** : Displays the current signal and mode and selects menus.
- ⏻/I : Turns the power on or off.

Assembling the Memory Cover

Assemble the cover with a screw as illustrated to prevent the USB memory from theft.

1

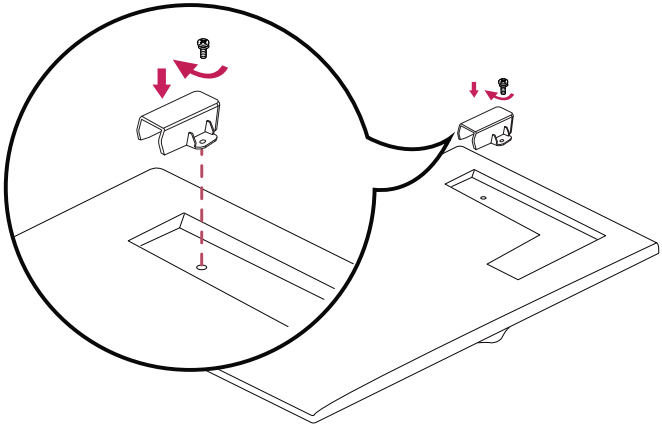

2

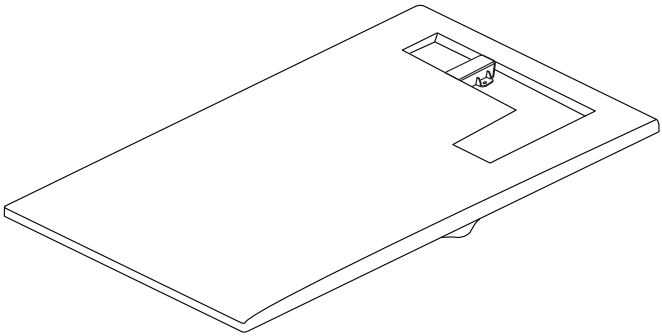

Connecting the Stand

- For certain models only.
- The image may be different according to the model.

32SM5*

1

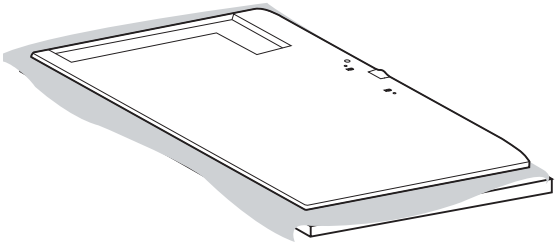

2

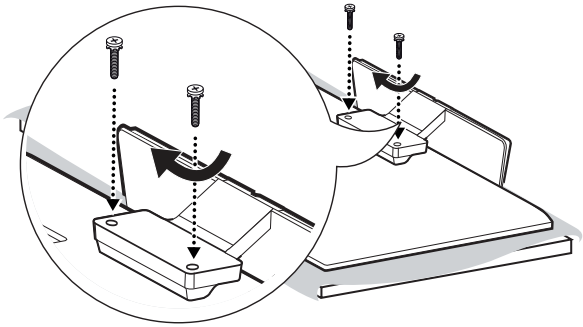

43/49/55SH7E, 43/49/55SM5*

1

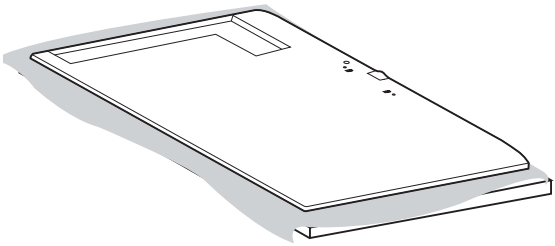

2

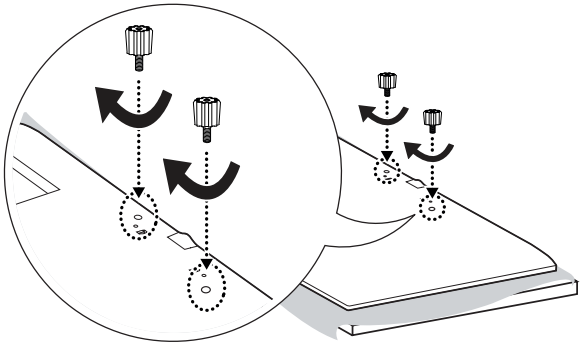

3

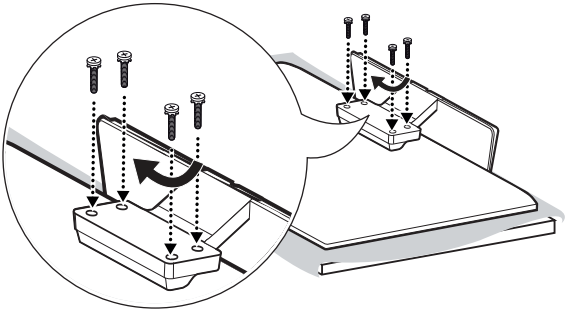

Connecting the Speakers

- For certain models only.
- The image may be different according to the model.

32SM5E

1 Connect an input signal cable before installing the speakers.

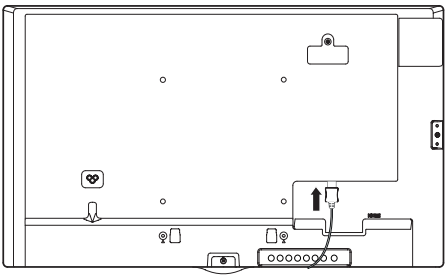

2 Mount the speakers by using screws as shown below. Make sure the power cable is disconnected before making a connection.

Basic installation

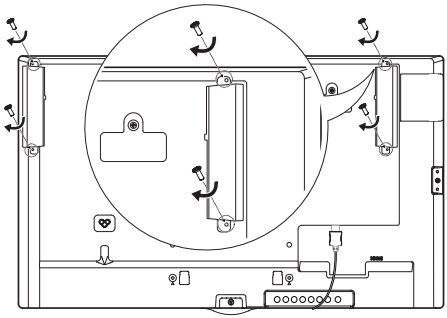

Installation with OPS connected

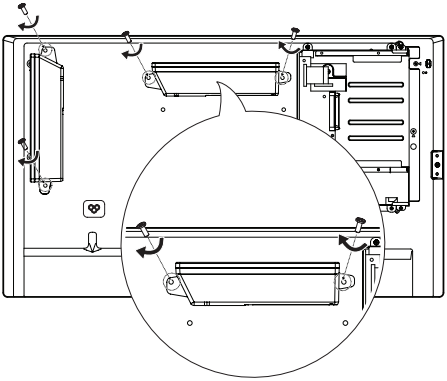

3 Then connect the speaker cable. After installing your speakers, use holders and cable ties to organize the speaker cables.

Basic installation

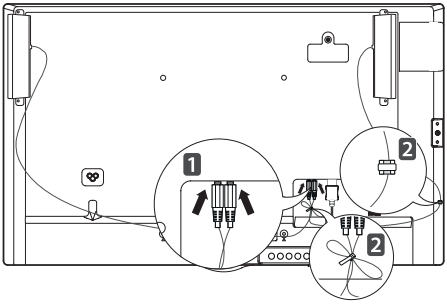

Installation with OPS connected

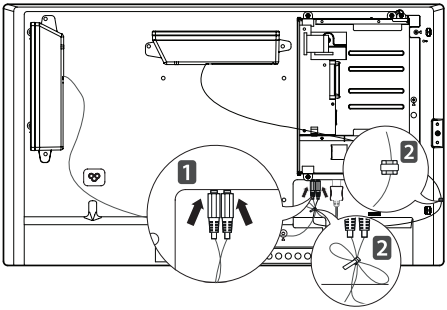

43/49/55SM5E

1 Connect an input signal cable before installing the speakers.

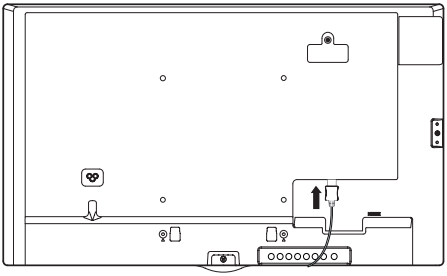

2 Mount the speakers by using screws as shown below. Make sure the power cable is disconnected before making a connection.

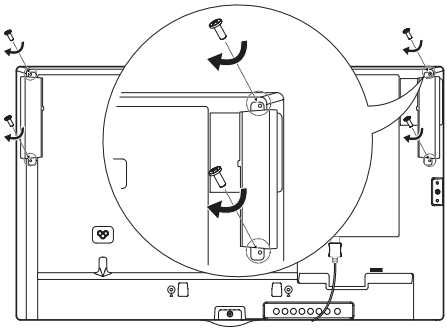

3 Then connect the speaker cable. After installing your speakers, use holders and cable ties to organize the speaker cables.

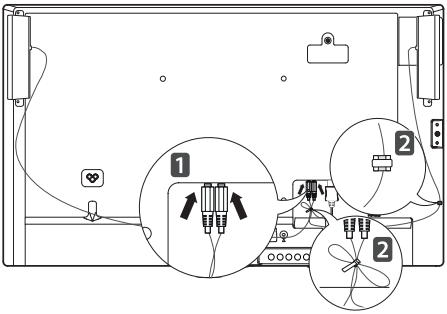

NOTE

- Please turn off the power before removing the cable. Connecting or removing the speaker cable while turned on may result in no sound.

Connecting the IR Sensor

When you connect the cable to the product, the feature for receiving remote control signals is activated. Rotate the IR sensor according to the screen orientation (Landscape/Portrait).

- The image may be different according to the model.

Basic installation

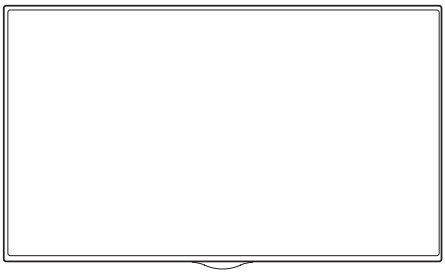

[Front]

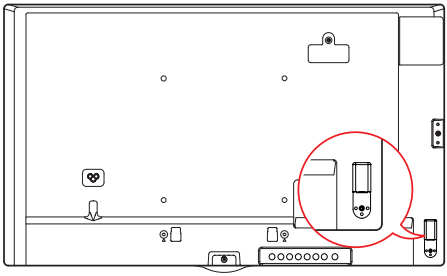

[Rear]

Landscape scene

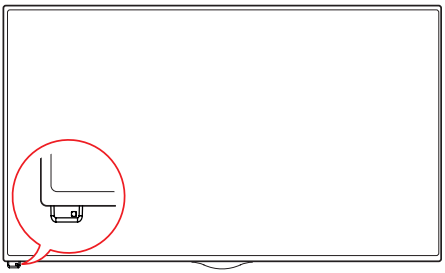

[Front]

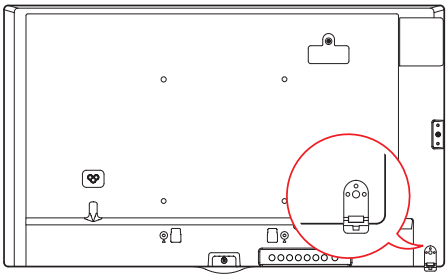

[Rear]

Portrait scene

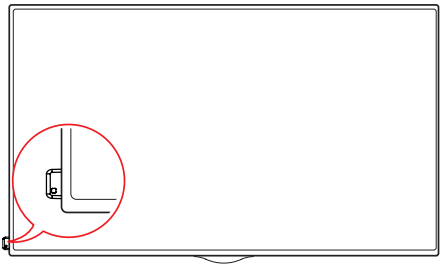

[Front]

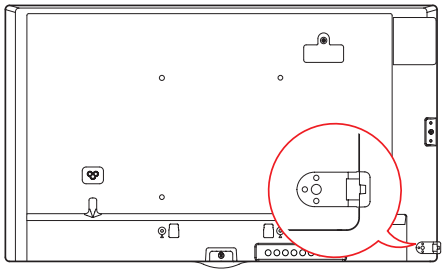

[Rear]

Portrait Layout

When installing in a portrait layout, rotate the monitor counterclockwise 90 degrees (when facing the screen).

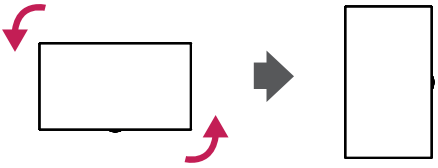

Using Kensington Lock

(This is not available for all models.)

The Kensington security system connector is located at the back of the monitor.

For more information on installation and use of this system, refer to the manual provided with the Kensington security system or visit *http://www.kensington.com*.

Connect the Kensington security system cable between the monitor and a table.

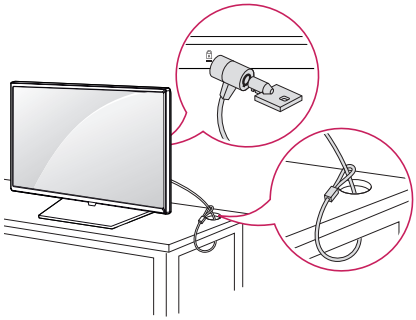

NOTE

- The Kensington security system is optional. You can obtain additional accessories from most electronics retail stores.
- The illustration shows a general example of installation and may look different from the actual product.

Attaching and removing the LG Logo Bracket

- For certain models only.
- The image may be different according to the model.

Removing the LG Logo Bracket

1 Lay a clean cloth on the floor, and then put the monitor on it with the screen face down. Using a screwdriver, remove the screw that secures the LG Logo Bracket to the bottom rear of the monitor.

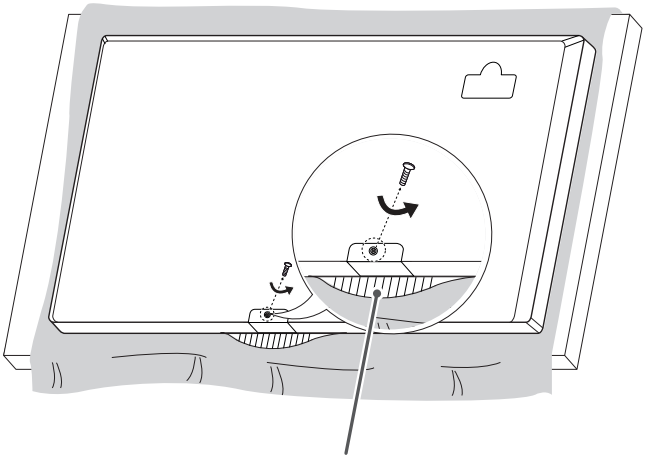

LG Logo Bracket

2 After removing the screw, remove the LG Logo Bracket. When re-attaching the LG Logo Bracket, repeat the process in reverse order.

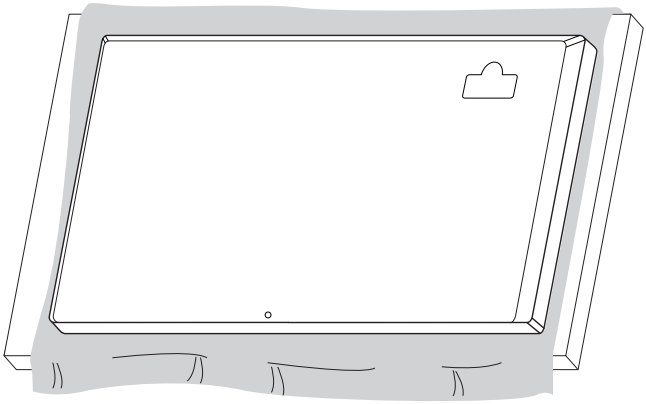

Attaching the LG Logo Bracket on the right side

1 Lay a clean cloth on the floor, and then put the monitor on it with the screen face down. Using a screwdriver, remove the screw that secures the LG Logo Bracket to the bottom rear of the monitor.

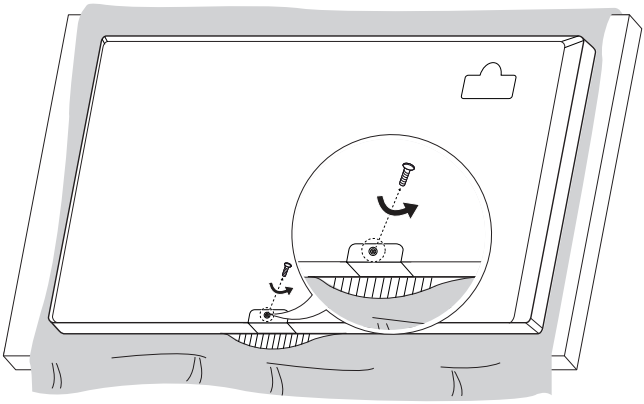

2 After removing the screw, remove the LG Logo Bracket. Attach the LG Logo Bracket with a screw, aligning it with the hole on the right side.

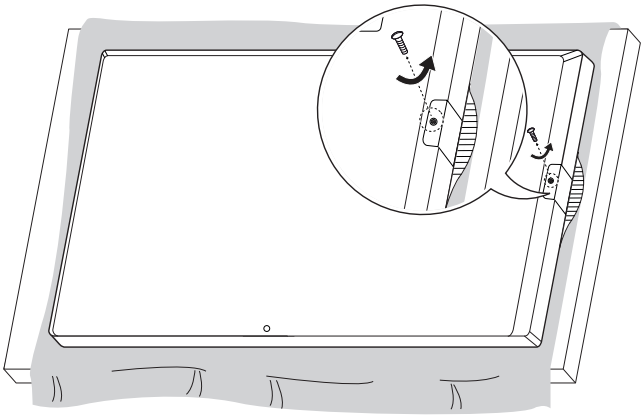

Installing on a Wall

For proper ventilation, allow a clearance of 100 mm (3.9 inches) on each side and from the wall. Detailed installation instructions are available from your dealer, see the optional Tilt Wall Mounting Bracket Installation and Setup Guide.

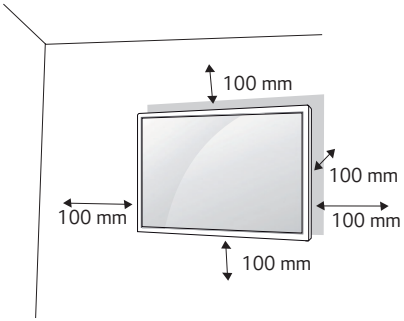

To install your monitor on a wall, attach a wall mounting bracket (optional part) to the back of the monitor.
Make sure that the wall mounting bracket is securely fixed to the monitor and to the wall.

1. Use only screws and wall mounting brackets that conform to VESA standards.
2. Screws which are longer than standard length may damage the inside of the monitor.
3. A non-VESA standard screw may damage the product and cause the monitor to fall. LG Electronics is not liable for any accidents related to the use of non-standard screws.
4. Please use VESA standard as below.

- 785 mm (30.9 inches) and above

  * Fixing screws: Diameter 6.0 mm (0.2 inches) x Pitch 1.0 mm (0.03 inches) x Length 12 mm (0.4 inches)

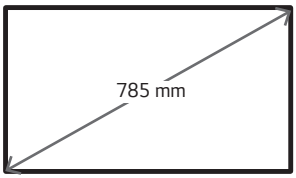

CAUTION

- Disconnect the power cord before moving or installing the monitor to avoid risk of electric shock.
- If you install the monitor on a ceiling or slanted wall, it may fall and result in injury. Use an authorized LG wall mount and contact your local dealer or qualified personnel to assist with the installation.
- Do not over tighten the screws as this may damage the monitor and void your warranty.
- Use only screws and wall mounting brackets that meet the VESA standard. Any damage or injuries caused by misuse or use of improper accessories are not covered by the warranty.

NOTE

- The wall mount kit includes the installation guide and all necessary parts.
- The wall mounting bracket is optional. You can obtain additional accessories from your local dealer.
- The length of screws required may differ depending on the wall mount. Be sure to use the correct length.
- For more information, please refer to the guide provided with the wall mount.

REMOTE CONTROL

The descriptions in this manual are based on the buttons on the remote control. Please read this manual carefully to use the monitor correctly. To install batteries, open the battery cover, place batteries (1.5 V AAA) matching ⊕ and ⊖ terminals to the labels inside the compartment, and close the battery cover. To remove the batteries, perform the installation actions in reverse. The illustrations may differ from the actual accessories.

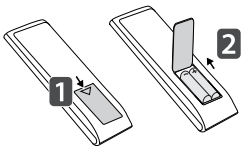

⚠ CAUTION

- Do not mix old and new batteries, as this may damage the remote control.
- Be sure to point the remote control toward the remote control sensor on the monitor.
- Some features of the remote control may not be supported in certain models.

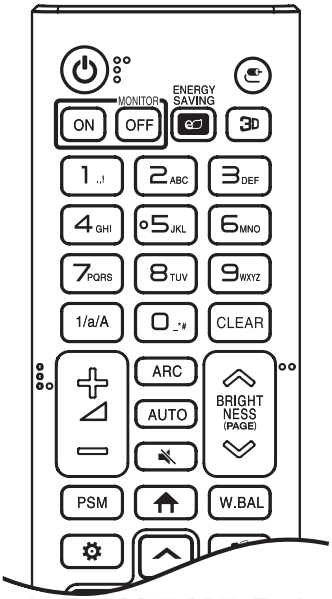

(POWER) Turns the monitor on or off.

MONITOR ON Turns the monitor on.

MONITOR OFF Turns the monitor off.

ENERGY SAVING Reduces power consumption by adjusting peak screen brightness.

(INPUT) Selects the input mode.

3D Used for viewing 3D videos.

1/a/A Toggles between numerical and alphabetical.

Number and Alphabet buttons Enters numerical or alphabetical characters depending upon the setting.

CLEAR Deletes the entered numerical or alphabetical character.

Volume Up/Down Button Adjusts the volume.

ARC Selects the Aspect Ratio mode.

AUTO Automatically adjusts picture position and minimizes image instability (available for RGB input only).

(MUTE) Mutes all sounds.

BRIGHTNESS Adjusts the brightness of the display.

PAGE function is not supported in this model.

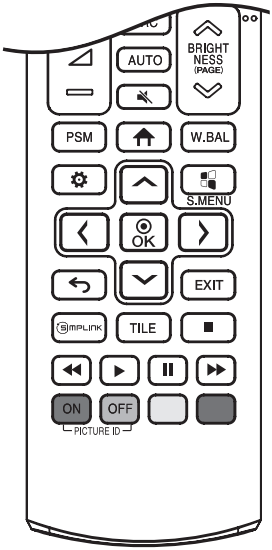

PSM Selects the Picture Mode.

(HOME) Activates the Launcher.

W.BAL Enters the White Balance menu.

(SETTINGS) Accesses the main menus or saves your input and exit menus.

S.MENU SuperSign menu key.

Navigation Buttons Scrolls through menus or options.

OK Selects menus or options and confirms your input.

(BACK) Allows you to move back one step in the user interaction function.

EXIT Quit all OSD tasks and applications.

SIMPLINK Allows you to control various multimedia devices to enjoy multimedia simply by using the remote control through the SimpLink menu.

TILE Selects the TILE Mode.

PICTURE ID ON/OFF When the Picture ID number matches the Set ID number, you can control whichever monitor you want in multi-display format.

USB Menu Control Buttons Controls media playback.

MAKING CONNECTIONS

You can connect various external devices to your monitor. Change the input mode and select the external device you want to connect. For more information about external device connections, see the user manual provided with each device.

Connecting to a PC

Some of the cables are not provided.

This monitor supports the Plug and Play* feature.

* Plug and Play: a feature that enables a PC to recognize devices attached by the user without device configuration or user intervention when powering up.

External Device Connection

Connect a HD receiver, DVD, or VCR player to the monitor and select an appropriate input mode.

Some of the cables are not provided. For the best picture and sound quality, connecting external devices to your monitor using HDMI cables is recommended.

NOTE

- For the best image quality, using the monitor with HDMI connection is recommended.
- To comply with the specifications of the product, use a shielded interface cable with ferrite core, such as a D-sub 15-pin cable and DVI-D/HDMI cable.
- If you turn the monitor on when the set is cold, the screen may flicker. This is normal.
- Sometimes red, green, or blue spots may appear on the screen. This is normal.
- Use a High Speed HDMI®/™ cable.
- Use a certified cable with the HDMI logo attached. If you do not use a certified HDMI cable, the screen may not display or a connection error may occur.
- Recommended HDMI Cable Types
  - High-Speed HDMI®/™ Cable
  - High-Speed HDMI®/™ Cable with Ethernet
- If you cannot hear any sound in HDMI mode please check your PC settings. Some PCs require you to manually change the default audio output to HDMI.
- If you want to use HDMI-PC mode, you must set your PC/DTV to PC mode.
- You may experience compatibility issues if you use HDMI-PC mode.
- Make sure the power cable is disconnected.
- If you connect a gaming device to the monitor, use the cable provided with the gaming device.
- It is recommended to use the speakers that are provided as optional accessories.
- High Speed HDMI®/™ cables transmit a HD signal up to 1080p and higher.
- ETHERNET supports only 100 BASE-T.

CAUTION

- Connect the signal input cable and tighten it by turning the screws clockwise.
- Do not press the screen with your finger for a prolonged period as this may result in temporary distortion on the screen.
- Avoid displaying static images on the screen for a long period of time to prevent image burn. Use a screensaver if possible.
- A wireless communication device near your monitor can affect the image.

Using the Input List

(HOME) → 

- HDMI1 → HDMI2 → HDMI3/OPS/DVI-D → DISPLAYPORT

TROUBLESHOOTING

No image is displayed.

Problem	Action
Is the product power cord connected?	• Check if the power cord is correctly plugged into the power outlet.
Does the “Invalid Format” message appear?	• The signal from the PC (Graphics card) is out of the vertical or horizontal frequency range of the product. Adjust the frequency range by referring to the Specifications in this manual.
Does the “No Signal” message appear?	• The signal cable between PC and product is not connected. Check the signal cable. • Access the input menu to check the input signal.

The Unknown Product message appears when the product is connected.

Problem	Action
Did you install the driver?	• Check if the Plug and Play function is supported by referring to the graphics card user manual.

The screen image looks abnormal.

Problem	Action
Is the screen position wrong?	• Check if the graphics card resolution and frequency are supported by the product. If the frequency is out of range, set to the recommended resolution in the [Control Panel] → [Display] → [Setting] menu. (The settings may differ depending on your operating system.)
The screen is displayed abnormally.	• The proper input signal is not connected to the signal port. Connect the signal cable that matches with the source input signal.

After-image appears on the product.

Problem	Action
After-image appears when the product is turned off.	• If you use a fixed image for a long time, the pixels may be damaged. Use the screen-saver function. • When a dark image is displayed on the screen after an image with high contrast (black and white or gray), this may cause image sticking. This is normal for LCD screen products.

The audio function does not work.

Problem	Action
No sound?	• See if the audio cable is connected properly. • Adjust the volume. • See if the sound is set properly.
Sound is too dull.	• Select the appropriate equalizer sound.
Sound is too low.	• Adjust the volume.

Screen color is abnormal.

Problem	Action
Screen has poor color resolution (16 colors).	• Set the number of colors to more than 24 bits (true color). Select [Control Panel] → [Display] → [Settings] → [Color Table] in Windows. (The settings may differ depending on your operating system.)
Screen color is unstable or mono-colored.	• Check the connection status of the signal cable. Or, re-insert the PC graphics card.
Do black spots appear on the screen?	• Several pixels (red, green, blue, white, or black color) may appear on the screen, which can be attributable to the unique characteristics of the LCD panel. This is not a malfunction of the LCD.

The operation does not work normally.

Problem	Action
The power suddenly turned off.	• Is the Timer set? • Check the power control settings. Power interrupted.

⚠ CAUTION

- Image sticking does not occur when using constantly changing images but may occur when using a fixed image for an extended period of time. Therefore, it is recommended that you use the instructions below to decrease the likelihood of image sticking occurring when using a fixed image. It is recommended that you change the screen at least once every 12 hours at the very minimum; if done more frequently, the prevention of image sticking is more effective.

Recommended operating conditions

1 Change the background and the character colors using the same time interval.

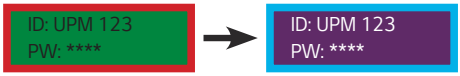

When changing colors, using complementary colors helps to prevent image sticking.

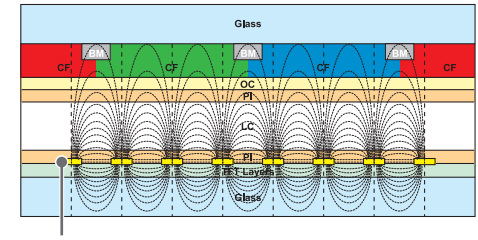

ITO or MoTi Pixel Layer

2 Change the image using the same time interval.

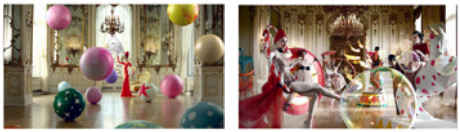

Make sure that the characters or images before changing the image remain in the same location after changing the image.

What is image sticking?

When the LCD panel displays a static image for an extended period of time, it can cause a voltage difference between the electrodes that operate the liquid crystals. When the voltage difference between the electrodes builds up over time, liquid crystals have a tendency to remain aligned in one direction. During this process, a previously displayed image remains visible. This phenomenon is referred to as image sticking.

PRODUCT SPECIFICATIONS

The product specifications below may be changed without prior notice due to upgrade of product functions.
" ~ " refers to alternating current (AC), and " ⎓ " refers to direct current (DC).

LCD screen	Screen type	Thin Film Transistor (TFT) Liquid Crystal Display (LCD) Screen
Video signal	Maximum resolution	3840 x 2160 @ 30 Hz (HDMI1, HDMI2, HDMI3, DP) 1920 x 1080 @ 60 Hz (DVI-D, OPS) - This may not be supported on some OS or graphics card types.
	Recommended resolution	1920 x 1080 @ 60 Hz - This may not be supported on some OS or graphics card types.
	Horizontal frequency	HDMI/ DVI-D/ DisplayPort: 30 kHz to 83 kHz
	Vertical frequency	DVI-D / OPS: 56 to 60 Hz HDMI / DP: 30, 56 Hz to 60Hz
	Synchronization	Separate Sync, Digital
Input/output ports	**SH7E/ **SM5KE	AUDIO IN/OUT, HDMI1, HDMI2, HDMI3, IR & LIGHT SENSOR, DVI-D IN, DP IN/OUT, LAN, USB 3.0 IN, RS-232 IN/OUT
	**SM5E	SPEAKER OUT, AUDIO IN/OUT, HDMI1, HDMI2, HDMI3, IR & LIGHT SENSOR, DVI-D IN, DP IN/OUT, LAN, USB 3.0 IN, RS-232 IN/OUT
Embedded battery		Applied
Environmental Conditions	Operating Temperature Operating Humidity	0 °C to 40 °C (32 °F to 104 °F) 10 % to 80 %
	Storage Temperature Storage Humidity	-20 °C to 60 °C (-4 °F to 140 °F) 5 % to 85 %

* DP Cable: Use a DP cable that is certified to a DP 1.1a (SST) standard or higher.

* Applicable only for models that support the speakers.

Audio	RMS Audio Output	10 W + 10 W (R + L)
	Input Sensitivity	0.7 Vrms
	Speaker Impedance	6 Ω

43SH7E

LCD screen	Pixel pitch	0.4902 mm (H) X 0.4902 mm (V)
Power	Rated power	AC 100-240 V ~ 50/60 Hz 1.3 A
	Power consumption	On Mode: 95 W (Typ.) Sleep Mode: ≤ 0.5 W Off Mode: ≤ 0.5 W
Dimensions (Width x Height x Depth) /Weight	Head	969.6 mm x 563.9 mm x 54 mm / 10.5 kg (38.1 inches x 22.2 inches x 2.1 inches / 23.1 lbs)
	Head + Stand	969.6 mm x 622.2 mm x 193 mm / 13 kg (38.1 inches x 24.4 inches x 7.5 inches / 28.6 lbs)

49SH7E

LCD screen	Pixel pitch	0.55926 mm (H) X 0.55926 mm (V)
Power	Rated power	AC 100-240 V ~ 50/60 Hz 1.4 A
	Power consumption	On Mode: 110 W (Typ.) Sleep Mode: ≤ 0.5 W Off Mode: ≤ 0.5 W
Dimensions (Width x Height x Depth) /Weight	Head	1102.2 mm x 638.5 mm x 54 mm / 14.3 kg (43.3 inches x 25.1 inches x 2.1 inches / 31.5 lbs)
	Head + Stand	1102.2 mm x 696.8 mm x 219.6 mm / 17.6 kg (43.3 inches x 27.4 inches x 8.6 inches / 38.8 lbs)

55SH7E

LCD screen	Pixel pitch	0.630 mm (H) X 0.630 mm (V)
Power	Rated power	AC 100-240 V ~ 50/60 Hz 1.5 A
	Power consumption	On Mode: 130 W (Typ.) Sleep Mode: ≤ 0.5 W Off Mode: ≤ 0.5 W
Dimensions (Width x Height x Depth) /Weight	Head	1238 mm x 714.9 mm x 54 mm / 17.5 kg (48.7 inches x 28.1 inches x 2.1 inches / 38.5 lbs)
	Head + Stand	1238 mm x 773.4 mm x 219.6 mm / 20.8 kg (48.7 inches x 30.4 inches x 8.6 inches / 45.8 lbs)

32SM5E

LCD screen	Pixel pitch	0.36375 mm (H) X 0.36375 mm (V)
Power	Rated power	AC 100-240 V ~ 50/60 Hz 0.8 A
	Power consumption	On Mode: 60 W (Typ.) Sleep Mode: ≤ 0.5 W Off Mode: ≤ 0.5 W
Dimensions (Width x Height x Depth) /Weight	Head	729.4 mm x 428.9 mm x 55.5 mm / 5.2 kg (28.7 inches x 16.8 inches x 2.1 inches / 11.4 lbs)
	Head + Stand	729.4 mm x 481 mm x 154.2 mm / 6 kg (28.7 inches x 18.9 inches x 6.0 inches / 13.2 lbs)
	Head + Speaker	729.4 mm x 428.9 mm x 95.7 mm / 5.7 kg (28.7 inches x 16.8 inches x 3.7 inches / 12.5 lbs)
	Head + Speaker+ Stand	729.4 mm x 481 mm x 154.2 mm / 6.5 kg (28.7 inches x 18.9 inches x 6.0 inches / 14.3 lbs)

43SM5E

LCD screen	Pixel pitch	0.4902 mm (H) X 0.4902 mm (V)
Power	Rated power	AC 100-240 V ~ 50/60 Hz 0.9 A
	Power consumption	On Mode: 75 W (Typ.) Sleep Mode: ≤ 0.5 W Off Mode: ≤ 0.5 W
Dimensions (Width x Height x Depth) /Weight	Head	969.6 mm x 563.9 mm x 38.6 mm / 9.8 kg (38.1 inches x 22.2 inches x 1.5 inches / 21.6 lbs)
	Head + Stand	969.6 mm x 622.2 mm x 193 mm / 12.3 kg (38.1 inches x 24.4 inches x 7.5 inches / 27.1 lbs)
	Head + Speaker	969.6 mm x 563.9 mm x 67.9 mm / 10.3 kg (38.1 inches x 22.2 inches x 2.6 inches / 22.7 lbs)
	Head + Speaker+ Stand	969.6 mm x 622.2 mm x 193 mm / 12.8 kg (38.1 inches x 24.4 inches x 7.5 inches / 28.2 lbs)

49SM5E

LCD screen	Pixel pitch	0.55926 mm (H) X 0.55926 mm (V)
Power	Rated power	AC 100-240 V ~ 50/60 Hz 1.0 A
	Power consumption	On Mode: 85 W (Typ.) Sleep Mode: ≤ 0.5 W Off Mode: ≤ 0.5 W
Dimensions (Width x Height x Depth) /Weight	Head	1,102.2 mm x 638.5 mm x 38.6 mm / 14.1 kg (43.3 inches x 25.1 inches x 1.5 inches / 31.0 lbs)
	Head + Stand	1,102.2 mm x 696.8 mm x 219.6 mm / 17.4 kg (43.3 inches x 27.4 inches x 8.6 inches / 38.3 lbs)
	Head + Speaker	1,102.2 mm x 638.5 mm x 67.9 mm / 14.6 kg (43.3 inches x 25.1 inches x 2.6 inches / 32.1 lbs)
	Head + Speaker+ Stand	1,102.2 mm x 696.8 mm x 219.6 mm / 17.9 kg (43.3 inches x 27.4 inches x 8.6 inches / 39.4 lbs)

55SM5E

LCD screen	Pixel pitch	0.630 mm (H) X 0.630 mm (V)
Power	Rated power	AC 100-240 V ~ 50/60 Hz 1.1 A
	Power consumption	On Mode: 100 W (Typ.) Sleep Mode: ≤ 0.5 W Off Mode: ≤ 0.5 W
Dimensions (Width x Height x Depth) /Weight	Head	1,238 mm x 714.9 mm x 38.6 mm / 17.3 kg (48.7 inches x 28.1 inches x 1.5 inches / 38.1 lbs)
	Head + Stand	1,238 mm x 773.4 mm x 219.6 mm / 20.6 kg (48.7 inches x 30.4 inches x 8.6 inches / 45.4 lbs)
	Head + Speaker	1,238 mm x 714.9 mm x 67.9 mm / 17.8 kg (48.7 inches x 28.1 inches x 2.6 inches / 39.2 lbs)
	Head + Speaker+ Stand	1,238 mm x 773.4 mm x 219.6 mm / 21.1 kg (48.7 inches x 30.4 inches x 8.6 inches / 46.5 lbs)

32SM5KE

LCD screen	Pixel pitch	0.36375 mm (H) X 0.36375 mm (V)
Power	Rated power	AC 100-240 V ~ 50/60 Hz 0.8 A
	Power consumption	On Mode: 60 W (Typ.) Sleep Mode: ≤ 0.5 W Off Mode: ≤ 0.5 W
Dimensions (Width x Height x Depth) /Weight	Head	729.4 mm x 428.9 mm x 60.5 mm / 5.4 kg (28.7 inches x 16.8 inches x 2.3 inches / 11.9 lbs)
	Head + Stand	729.4 mm x 481 mm x 154.2 mm / 6.2 kg (28.7 inches x 18.9 inches x 6.0 inches / 13.6 lbs)

43SM5KE

LCD screen	Pixel pitch	0.4902 mm (H) X 0.4902 mm (V)
Power	Rated power	AC 100-240 V ~ 50/60 Hz 0.9 A
	Power consumption	On Mode: 75 W (Typ.) Sleep Mode: ≤ 0.5 W Off Mode: ≤ 0.5 W
Dimensions (Width x Height x Depth) /Weight	Head	969.6 mm x 563.9 mm x 54 mm / 10.5 kg (38.1 inches x 22.2 inches x 2.1 inches / 23.1 lbs)
	Head + Stand	969.6 mm x 622.2 mm x 193 mm / 13 kg (38.1 inches x 24.4 inches x 7.5 inches / 28.6 lbs)

49SM5KE

LCD screen	Pixel pitch	0.55926 mm (H) X 0.55926 mm (V)
Power	Rated power	AC 100-240 V ~ 50/60 Hz 1.0 A
	Power consumption	On Mode: 85 W (Typ.) Sleep Mode: ≤ 0.5 W Off Mode: ≤ 0.5 W
Dimensions (Width x Height x Depth) /Weight	Head	1,102.2 mm x 638.5 mm x 54 mm / 14.3 kg (43.3 inches x 25.1 inches x 2.1 inches / 31.5 lbs)
	Head + Stand	1,102.2 mm x 696.8 mm x 219.6 mm / 17.6 kg (43.3 inches x 27.4 inches x 8.6 inches / 38.8 lbs)

55SM5KE

LCD screen	Pixel pitch	0.630 mm (H) X 0.630 mm (V)
Power	Rated power	AC 100-240 V ~ 50/60 Hz 1.1 A
	Power consumption	On Mode: 100 W (Typ.) Sleep Mode: ≤ 0.5 W Off Mode: ≤ 0.5 W
Dimensions (Width x Height x Depth) /Weight	Head	1,238 mm x 714.9 mm x 54 mm / 17.5 kg (48.7 inches x 28.1 inches x 2.1 inches / 38.5 lbs)
	Head + Stand	1,238 mm x 773.4 mm x 219.6 mm / 20.8 kg (48.7 inches x 30.4 inches x 8.6 inches / 45.8 lbs)

Wireless module (LGSBWAC72) Specifications	
Wireless LAN (IEEE 802.11a/b/g/n/ac)	
Frequency range (MHz)	**Output power (Max.) (dBm)**
2400 to 2483.5	15
5150 to 5725	14.5
5725 to 5850	14.5
Bluetooth	
Frequency range (MHz)	**Output power (Max.) (dBm)**
2400 to 2483.5	8.5

- As band channels can vary per country, the user cannot change or adjust the operating frequency. This product is configured for the regional frequency table.
- For consideration of the user, this device should be installed and operated with a minimum distance of 20 cm (7.8 inches) between the device and the body.

* FCC ID: BEJLGSBWAC72 / IC: 2703H-LGSBWAC72

HDMI / DVI-D / DISPLAYPORT / OPS (PC) Support Mode

Resolution	Horizontal frequency (kHz)	Vertical frequency (Hz)	Remarks
800 x 600	37.879	60.317	
1024 x 768	48.363	60	
1280 x 720	44.772	59.855	
1366 x 768	47.7	60	
1280 x 1024	63.981	60.02	
1680 x 1050	65.290	59.954	
1920 x 1080	67.5	60	
3840 x 2160	67.5	30	HDMI1/HDMI2/HDMI3/DP

HDMI / DISPLAYPORT / OPS (DTV) mode

Resolution	Horizontal frequency (kHz)	Vertical frequency (Hz)	Remarks
480/60p	31.5	60	
576/50p	31.25	50	
720/50p	37.5	50	
720/60p	45	60	
1080/50i	28.1	50	
1080/60i	33.75	60	
1080/50p	56.25	50	
1080/60p	67.432	59.94	
1080/60p	67.5	60	
2160/30p	67.5	30	HDMI1/HDMI2/HDMI3/DP

NOTE

- PC resolutions available for the Input Label option in HDMI / DVI-D / DISPLAYPORT input modes:
  1280 x 720 / 60 Hz, 1920 x 1080 / 60 Hz, 3840 x 2160 / 30 Hz; 480p, 720p, 1080p and 2160p DTV resolutions.
- Vertical frequency: The product display functions by the screen image changing dozens of times every second like a fluorescent lamp. The vertical frequency or refresh rate is the number of times the image display is repeated per second. The unit is Hz.
- Horizontal frequency: The horizontal interval is the time taken to display one horizontal line. When 1 is divided by the horizontal interval, the number of horizontal lines displayed every second can be tabulated as the horizontal frequency. The unit is kHz.





ENERGY STAR® is a set of power-saving guidelines issued by the U.S.Environmental Protection Agency (EPA).

As an ENERGY STAR® Partner LGE U. S. A., Inc. has determined that this product meets the ENERGY STAR® guidelines for energy efficiency.

Refer to ENERGYSTAR.gov for more information on the ENERGY STAR® program.

Make sure to read the Safety Precautions before using the product.

The model and serial numbers of the SET are located on the back and one side of the SET. Record it below should you ever need service.

MODEL _____

SERIAL _____

Temporary noise is normal when powering ON or OFF this device.