LG
Life's Good

LG OLED TV

Safety and Reference

Please read this manual carefully before operating your set and retain it for future reference.

www.lg.com

P/NO : MFL69708702 (1705-REV02)
Printed in Korea

Copyright © 2017 LG Electronics Inc.
All Rights Reserved.

MFL69708702

India region only. (Below sentence is not applicable for above 1920 X 1080 resolution TV models.)

ATTENTION:

This product is qualified for the BEE Star rating in the 'Home' Mode.

The Objectives of Star Labeling Program is designed to promote energy efficient products and practices.

When the television is initially set up, it is designed to meet the BEE Star Labeling requirements while maintaining optimum picture quality.

- Changes to certain functionalities of this television (TV Guide, Picture/sound etc) may change the power consumption.
- Depending upon such changed setting (eg., Retail mode), the power consumption may vary which possibly could exceed the stated energy consumption.

To reset the television to Star rating qualified settings, select 'Home' mode from the initial set-up procedure in 'factory settings' under the 'Set-up' menu.

Warning! Safety instructions

CAUTION : TO REDUCE THE RISK OF ELECTRIC SHOCK, DO NOT REMOVE COVER (OR BACK). NO USER-SERVICEABLE PARTS INSIDE. REFER TO QUALIFIED SERVICE PERSONNEL.

This symbol is intended to alert the user to the presence of uninsulated "dangerous voltage" within the product's enclosure that may be of sufficient magnitude to constitute a risk of electric shock to persons.

This symbol is intended to alert the user to the presence of important operating and maintenance (servicing) instructions in the literature accompanying the appliance.

WARNING : TO REDUCE THE RISK OF FIRE AND ELECTRIC SHOCK, DO NOT EXPOSE THIS PRODUCT TO RAIN OR MOISTURE.

- Do not place the TV and/or remote control in the following environments:
  - A location exposed to direct sunlight
  - An area with high humidity such as a bathroom
  - Near any heat source such as stoves and other devices that produce heat
  - Near kitchen counters or humidifiers where they can easily be exposed to steam or oil
  - An area exposed to rain or wind
  - Near containers of water such as vases

  Otherwise, this may result in fire, electric shock, malfunction or product deformation.
- Do not place the product where it might be exposed to dust. This may cause a fire hazard.
- Mains Plug is the TV connecting/disconnecting device to AC mains electric supply. This plug must remain readily attached and operable when TV is in use.
- Do not touch the power plug with wet hands. Additionally, if the cord pin is wet or covered with dust, dry the power plug completely or wipe dust off. You may be electrocuted due to excess moisture.
- Make sure to connect Mains cable to compliant AC mains socket with Grounded earth pin. (Except for devices which are not grounded on earth.) Otherwise possibility you may be electrocuted or injured.
- Insert power cable plug completely into wall socket otherwise if not secured completely into socket, fire ignition may break out.
- Ensure the power cord does not come into contact with hot objects such as a heater. This may cause a fire or an electric shock hazard.
- Do not place a heavy object, or the product itself, on power cables. Otherwise, this may result in fire or electric shock.
- Bend antenna cable between inside and outside building to prevent rain from flowing in. This may cause water damaged inside the Product and could give an electric shock.
- When mounting TV onto wall make sure to neatly install and isolate cabling from rear of TV as to not create possibility of electric shock / fire hazard.
- Do not plug too many electrical devices into a single multiple electrical outlet. Otherwise, this may result in fire due to over-heating.
- Do not drop the product or let it fall over when connecting external devices. Otherwise, this may result in injury or damage to the product.
- Keep the anti-moisture packing material or vinyl packing out of the reach of children. Anti-moisture material is harmful if swallowed. If swallowed by mistake, force the patient to vomit and visit the nearest hospital. Additionally, vinyl packing can cause suffocation. Keep it out of the reach of children.
- Do not let your children climb or cling onto the TV.
  Otherwise, the TV may fall over, which may cause serious injury.
- Dispose of used batteries carefully to ensure that a small child does not consume them. Please seek Doctor- Medical Attention immediately if child consumes batteries.
- Do not insert any metal objects/conductors (like a metal chopstick/ cutlery/screwdriver) into the end of power cable while the power plug is plugged into wall socket. Additionally, do not touch the power plug right after unplugging from the wall socket. You may be electrocuted.
- Do not put or store inflammable substances near the product. There is a danger of combustion/explosion or fire due to careless handling of the inflammable substances.
- Do not drop metallic objects such as coins, hair pins, chopsticks or wire into the product, or inflammable objects such as paper and matches. Children must pay particular attention. Electrical shock, fire or injury can occur. If a foreign object is dropped into the product, unplug the power cord and contact the service centre.
- Do not spray water on the product or scrub with an inflammable substance (thinner or benzene). Fire or electric shock accident can occur.
- Do not allow any impact, shock or any objects to fall into the unit, and do not drop anything onto the screen. You may be injured or the product can be damaged.
- Never touch this product or antenna during a thunder or lighting storm.
  You may be electrocuted.
- Never touch the wall outlet when there is leakage of gas, open the windows and ventilate. It may cause a fire or a burn by a spark.
- Do not disassemble, repair or modify the product at your own discretion. Fire or electric shock accident can occur.
  Contact the service centre for check, calibration or repair.

- If any of the following occur, unplug the product immediately and contact your local service centre.
  - The product has been damaged
  - Foreign objects have entered the product
  - The product produced smoke or a strange smell

  This may result in fire or electric shock.
- Unplug the TV from AC mains wall socket if you do not intend to use the TV for a long period of time. Accumulated dust can cause fire hazard and insulation deterioration can cause electric leakage/shock/fire.
- Apparatus shall not be exposed to dripping or splashing and no objects filled with liquids, such as vases, shall be placed on the apparatus.
- Do not install this product on a wall if it could be exposed to oil or oil mist. This may damage the product and cause it to fall.
- If water enters or comes into contact with TV, AC adapter or power cord please disconnect the power cord and contact service centre immediately. Otherwise, this may result in electric shock or fire.
- Only use an authorized AC adapter and power cord approved by LG Electronics. Otherwise, this may result in fire, electric shock, malfunction or product deformation.
- Never Disassemble the AC adapter or power cord. This may result in fire or electric shock.
- Be careful in handling the adapter to prevent any external shocks to it. An external shock may cause damage to the adapter.
- Make sure the power cord is connected securely to the power plug on the TV.
- Install the product where no radio wave occurs.
- There should be enough distance between an outside antenna and power lines to keep the former from touching the latter even when the antenna falls. This may cause an electric shock.
- Do not install the product on places such as unstable shelves or inclined surfaces. Also avoid places where there is vibration or where the product cannot be fully supported. Otherwise, the product may fall or flip over, which may cause injury or damage to the product.
- If you install the TV on a stand, you need to take actions to prevent the product from overturning. Otherwise, the product may fall over, which may cause injury.
- If you intend to mount the product to a wall, attach VESA standard mounting interface (optional parts) to the back of the product. When you install the set to use the wall mounting bracket (optional parts), fix it carefully so as not to drop.
- Only use the attachments / accessories specified by the manufacturer.
- When installing the antenna, consult with a qualified service technician. If not installed by a qualified technician, this may create a fire hazard or an electric shock hazard.
- We recommend that you maintain a distance of at least 2 to 7 times the diagonal screen size when watching TV. If you watch TV for a long period of time, this may cause blurred vision.
- Only use the specified type of battery. This could cause damage to the remote control.
- Do not mix new batteries with old batteries. This may cause the batteries to overheat and leak.
- Batteries should not be exposed to excessive heat. For example, keep away from direct Sunlight, open fireplace and electric heaters.
- Signal from Remote Control can be interrupted due to external/internal lighting eg Sunlight, fluorescent lighting. If this occurs turn off lighting or darken viewing area.
- When connecting external devices such as video game consoles, make sure the connecting cables are long enough. Otherwise, the product may fall over, which may cause injury or damage the product.
- Do not turn the product On/Off by plugging-in or unplugging the power plug to the wall outlet. (Do not use the power plug for switch.) It may cause mechanical failure or could give an electric shock.
- Please follow the installation instructions below to prevent the product from overheating.
  - The distance between the product and the wall should be more than 10 cm.
  - Do not install the product in a place with no ventilation (e.g., on a bookshelf or in a cupboard).
  - Do not install the product on a carpet or cushion.
  - Make sure the air vent is not blocked by a tablecloth or curtain.

  This may result in fire.
- Take care not to touch the ventilation openings when watching the TV for long periods as the ventilation openings may become hot. This does not affect the operation or performance of the product.
- Periodically examine the cord of your appliance, and if its appearance indicates damage or deterioration, unplug it, discontinue use of the appliance, and have the cord replaced with an exact replacement part by an authorized servicer.
- Prevent dust collecting on the power plug pins or outlet. This may cause a fire hazard.
- Protect the power cord from physical or mechanical abuse, such as being twisted, kinked, pinched, closed in a door, or walked upon. Pay particular attention to plugs, wall outlets, and the point where the cord exits the appliance.
- Do not press strongly upon the panel with a hand or sharp object such as nail, pencil or pen, or make a scratch on it, as it may cause damage to screen.
- Avoid touching the screen or holding your finger(s) against it for long periods of time. Doing so may produce some temporary or permanent distortion/damage to screen.
- As long as this unit is connected to the AC wall outlet, it is not disconnected from the AC power source even if you turn off this unit by SWITCH.
- When unplugging the cable, grab the plug and unplug it, by pulling at the plug. Don't pull at the cord to unplug the power cord from the power board, as this could be hazardous.

- When moving the product, make sure you turn the power off first. Then, unplug the power cables, antenna cables and all connecting cables.
  The TV set or power cord may be damaged, which may create a fire hazard or cause electric shock.
- When moving or unpacking the product, work in pairs because the product is heavy. Otherwise, this may result in injury.
- Refer all servicing to qualified service personnel. Servicing is required when the apparatus has been damaged in any way, such as power supply cord or plug is damaged, liquid has been spilled or objects have fallen into the apparatus, the apparatus has been exposed to rain or moisture, does not operate normally, or has been dropped.
- Do not use high voltage electrical goods near the TV (e.g. electric mosquito-swatter). This may result in product malfunction.
- When cleaning the product and its components, unplug the power first and wipe it with a soft cloth. Applying excessive force may cause scratches or discolouration. Do not spray with water or wipe with a wet cloth. Never use glass cleaner, aerial fresher, insecticide, lubricants, wax (car, industrial), abrasive, thinner, benzene, alcohol etc., which can damage the products and its panel. Otherwise, this may result in fire, electric shock or product damage (Deformation, corrosion or breakage).
- If the back of the glass on the bottom side of the screen has been contaminated with dust or other materials, you can clean it using a cotton flannel or a cloth. (Only OLED65E7*)

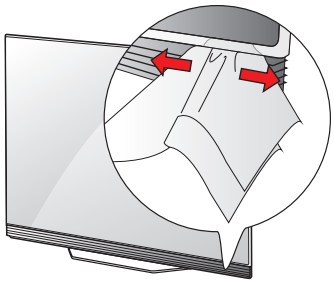

Preparing

- If the TV is turned on for the first time after it was shipped from the factory, initialization of the TV may take a few minutes.
- Image shown may differ from your TV.
- Your TV's OSD (On Screen Display) may differ slightly from that shown in this manual.
- The available menus and options may differ from the input source or product model that you are using.
- New features may be added to this TV in the future.
- The items supplied with your product may vary depending on the model.
- Product specifications or contents of this manual may be changed without prior notice due to upgrade of product functions.
- For an optimal connection, HDMI cables and USB devices should have bezels less than 10 mm thick and 18 mm width. Use an extension cable that supports USB 2.0 if the USB cable or USB memory stick does not fit into your TV's USB port.

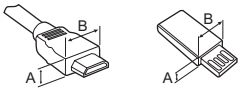

* A ≦ 10 mm

* B ≦ 18 mm

- Use a certified cable with the HDMI logo attached.
- If you do not use a certified HDMI cable, the screen may not display or a connection error may occur. (Recommended HDMI Cable Types)
  - High-Speed HDMI®/™ Cable (3 m or less)
  - High-Speed HDMI®/™ Cable with Ethernet (3 m or less)

- Do not use any unapproved items to ensure the safety and product life span.
- Any damage or injuries caused by using unapproved items are not covered by the manufacturer's warranty.
- Some models have a thin film attached on to the screen and this must not be removed.
- When attaching the stand to the TV set, place the screen facing down on a cushioned table or flat surface to protect the screen from scratches.
- Make sure that the screws are fastened completely. (If they are not fastened securely enough, the TV may tilt forward after being installed.) Do not use too much force and over tighten the screws; otherwise screw may be damaged and not tighten correctly.
- Make sure to wring any excess water or cleaner from the cloth.
- Do not spray water or cleaner directly onto the TV screen.
- Make sure to spray just enough of water or cleaner onto a dry cloth to wipe the screen.

ENGLISH

Separate purchase

Separate purchase items can be changed or modified for quality improvement without any notification. Contact your dealer to buy these items. These devices only work with certain models. The model name or design may be changed depending on the upgrade of product functions, manufacturer's circumstances or policies.

(Depending on model)

AN-MR650A Magic Remote

Lifting and moving the TV

Please note the following advice to prevent the TV from being scratched or damaged and for safe transportation regardless of its type and size.

- It is recommended to move the TV in the box or packing material that the TV originally came in.
- Before moving or lifting the TV, disconnect the power cord and all cables.
- When holding the TV, the screen should face away from you to avoid damage.

- Hold the side and bottom of the TV frame firmly. Make sure not to hold the transparent part, speaker, or speaker grill area.

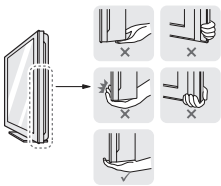

- When transporting a large TV, there should be at least 2 people.
- When transporting the TV by hand, hold the TV as shown in the following illustration.

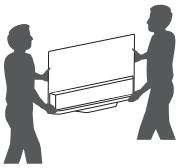

- When transporting the TV, do not expose the TV to jolts or excessive vibration.
- When transporting the TV, keep the TV upright, never turn the TV on its side or tilt towards the left or right.
- Do not apply excessive pressure to cause flexing /bending of frame chassis as it may damage screen.
- When handling the TV, be careful not to damage the protruding buttons.

- Avoid touching the screen at all times, as this may result in damage to the screen.
- Do not move the TV by holding the cable holders, as the cable holders may break, and injuries and damage to the TV may occur.

Using the button

(Depending on model)

You can simply operate the TV functions, using the button.

<A type>

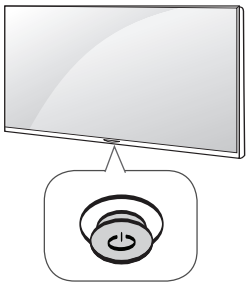

<B type>

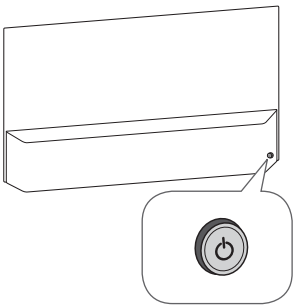

Basic functions

		Power On (Press) Power Off (Press and hold)[1]
		Volume Control
		Programmes Control

1 All running apps will close, and any recording in progress will stop.

Adjusting the menu

When the TV is turned on, press the ⏻ button one time. You can adjust the Menu items using the button.

⏻	Turns the power off.
✕	Clears on-screen displays and returns to TV viewing.
	Changes the input source.
⚙	Accesses the settings menu.

Mounting on a table

1 Lift and tilt the TV into its upright position on a table.
- Leave a 10 cm (minimum) space from the wall for proper ventilation.

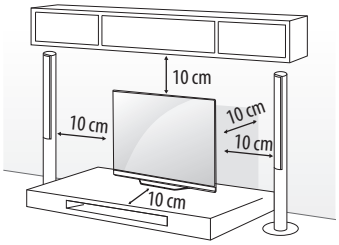

2 Connect the power cord to a wall outlet.

- Do not place the TV near or on sources of heat, as this may result in fire or other damage.
- Do not apply foreign substances (oils, lubricants, etc.) to the screw parts when assembling the product. (Doing so may damage the product.)
- If a television is not positioned in a sufficiently stable location, it can be potentially hazardous due to falling. Many injuries, particularly to children, can be avoided by taking simple precautions such as:
  - Using cabinets or stands recommended by the manufacturer of the television.
  - Only using furniture that can safely support the television.
  - Ensuring the television is not overhanging the edge of the supporting furniture.
  - Not placing the television on tall furniture (for example, cupboards or bookcases) without anchoring both the furniture and the television to a suitable support.
  - Not standing the televisions on cloth or other materials placed between the television and supporting furniture.
  - Educating children about the dangers of climbing on furniture to reach the television or its controls.

Securing the TV to a wall

(This feature is not available for all models.)

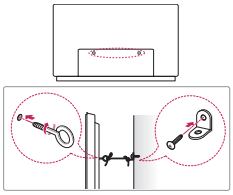

1 Insert and tighten the eye-bolts, or TV brackets and bolts on the back of the TV.
   - If there are bolts inserted at the eye-bolts position, remove the bolts first.
2 Mount the wall brackets with the bolts to the wall.
   Match the location of the wall bracket and the eye-bolts on the rear of the TV.
3 Connect the eye-bolts and wall brackets tightly with a sturdy rope.
   Make sure to keep the rope horizontal with the flat surface.

- Make sure that children do not climb on or hang on the TV.

- Use a platform or cabinet that is strong and large enough to support the TV securely.
- Brackets, bolts and ropes are not provided. You can obtain additional accessories from your local dealer.

Mounting on a wall

Attach an optional wall mount bracket at the rear of the TV carefully and install the wall mount bracket on a solid wall perpendicular to the floor. When you attach the TV to other building materials, please contact qualified personnel. LG recommends that wall mounting be performed by a qualified professional installer. We recommend the use of LG's wall mount bracket. LG's wall mount bracket is easy to move with cables connected. When you do not use LG's wall mount bracket, please use a wall mount bracket where the device is adequately secured to the wall with enough space to allow connectivity to external devices. It is advised to connect all the cables before installing fixed wall mounts.

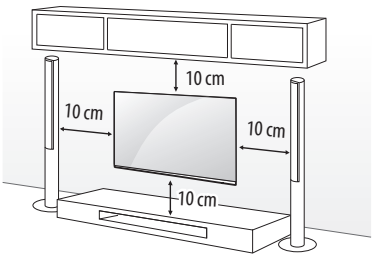

Make sure to use screws and wall mount bracket that meet the VESA standard. Standard dimensions for the wall mount kits are described in the following table.

Separate purchase (Wall mounting bracket)

Model	OLED55/65B7* OLED55/65C7* OLED65E7*	OLED55E7*
VESA (A x B) (mm)	300 x 200	400 x 200
Standard screw	M6	M6
Number of screws	4	4
Wall mount bracket	OTW420B	OTW420B

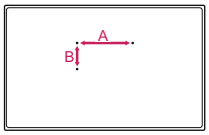

- Remove the stand before installing the TV on a wall mount by performing the stand attachment in reverse.

- To remove the stand, hold the top and bottom of stand, then pull it out while also lowering it as shown below. (Only OLED55E7*)

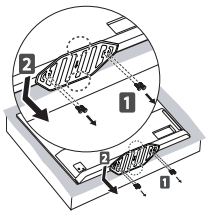

- To install the wall mount, use the stand assembly screws to attach the Wall mount cover to the bottom of the product as shown in the figure below. (Only when the item of the following form is provided)

Provided item		
Wall mount cover	x 2	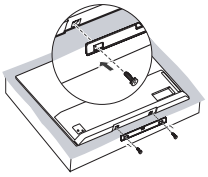

Connections (notifications)

Connect various external devices to the TV and switch input modes to select an external device. For more information of external device's connection, refer to the manual provided with each device.

Available external devices are: HD receivers, DVD players, VCRs, audio systems, USB storage devices, PC, gaming devices, and other external devices.

- The external device connection may differ from the model.
- Connect external devices to the TV regardless of the order of the TV port.
- If you record a TV program on a DVD recorder or VCR, make sure to connect the TV signal input cable to the TV through a DVD recorder or VCR. For more information of recording, refer to the manual provided with the connected device.
- Refer to the external equipment's manual for operating instructions.
- If you connect a gaming device to the TV, use the cable supplied with the gaming device.
- In PC mode, there may be noise associated with the resolution, vertical pattern, contrast or brightness. If noise is present, change the PC output to another resolution, change the refresh rate to another rate or adjust the brightness and contrast on the PICTURE menu until the picture is clear.
- In PC mode, some resolution settings may not work properly depending on the graphics card.
- If ULTRA HD content is played on your PC, video or audio may become disrupted intermittently depending on your PC's performance.
- When connecting via a wired LAN, it is recommended to use a CAT 7 cable.

Antenna connection

Connect the TV to a wall antenna socket with an RF cable (75 Ω).

- Use a signal splitter to use more than 2 TVs.
- If the image quality is poor, install a signal amplifier properly to improve the image quality.
- If the image quality is poor with an antenna connected, try to realign the antenna in the correct direction.
- An antenna cable and converter are not supplied.
- Supported DTV Audio: MPEG, Dolby Digital, Dolby Digital Plus, HE-AAC
- For a location that is not supported with ULTRA HD broadcasting, this TV cannot receive ULTRA HD broadcasts directly. This TV cannot receive ULTRA HD (3840 x 2160 pixels) broadcasts directly because the related standards have not been confirmed. (Depending on model)

Satellite dish connection

(Only satellite models)

Connect the TV to a satellite dish to a satellite socket with a satellite RF cable (75 Ω).

CI module connection

(Depending on model)

View the encrypted (pay) services in digital TV mode.

- Check if the CI module is inserted into the PCMCIA card slot in the right direction. If the module is not inserted properly, this can cause damage to the TV and the PCMCIA card slot.
- If the TV does not display any video and audio when CI+ CAM is connected, please contact to the Terrestrial/Cable/Satellite Service Operator.

USB connection

Some USB Hubs may not work. If a USB device connected through a USB Hub is not detected, connect it directly to the USB port on the TV.

Other connections

Connect your TV to external devices. For the best picture and audio quality, connect the external device and the TV with the HDMI cable. Some separate cable is not provided.

- → → → **General** → **HDMI ULTRA HD Deep Colour** :
  - On : Support 4K @ 50/60 Hz (4:4:4, 4:2:2, 4:2:0)
  - Off : Support 4K @ 50/60 Hz 8 bit (4:2:0)

If the device connected to Input Port also supports ULTRA HD Deep Colour, your picture may be clearer.

However, if the device doesn't support it, it may not work properly.

In that case, connect the device to a different HDMI port or change the TV's **HDMI ULTRA HD Deep Colour** setting to Off.

- Supported HDMI Audio format :
  DTS (44.1 kHz, 48 kHz),
  Dolby Digital / Dolby Digital Plus (32 kHz, 44.1 kHz, 48 kHz),
  PCM (32 kHz, 44.1 kHz, 48 kHz, 96 kHz, 192 kHz)
  (Depending on model)

ENGLISH

Magic remote functions

When the message "Magic remote battery is low. Change the battery." is displayed, replace the battery.

To replace batteries, open the battery cover, replace batteries (1.5 V AA) matching the ⊕ and ⊖ ends to the label inside the compartment, and close the battery cover. Be sure to point the magic remote toward the remote control sensor on the TV. To remove the batteries, perform the installation actions in reverse.

It is recommended that an Access Point (AP) be located more than 0.2 m away from the TV. If the AP is installed closer than 0.2 m the Magic remote may not work properly due to frequency interference.

- Some buttons and services may not be provided depending on models or regions.

- In Analogue TV and some countries, some remote control buttons may not work.

(Depending on model)

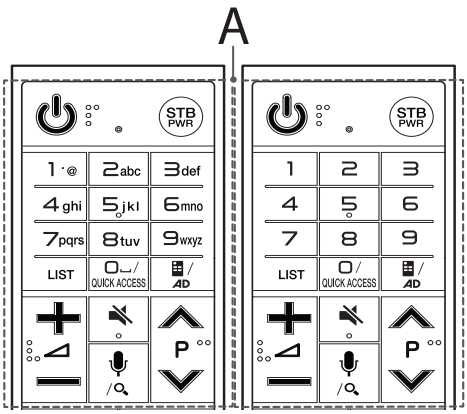

A

(POWER) Turns the TV on or off.

STB PWR You can turn your set-top box on or off by adding the set-top box to the universal remote control for your TV.

Number buttons Enters numbers.

Alphabet buttons Enters letters.

(Space) Opens an empty space on the screen keyboard.

LIST Accesses the saved programmes list.

(Screen Remote) Displays the Screen Remote.

- Accesses the Universal Control Menu.

QUICK ACCESS* You can access apps or Live TV using the number buttons corresponding to the features.

AD* Audio descriptions function will be enabled.

Adjusts the volume level.

P Scrolls through the saved programmes.

(MUTE) Mutes all sounds.

- Pressing and holding the button accesses the **Accessibility** menu.

(Voice recognition)

Network connection is required to use the voice recognition function.

1 Press the voice recognition button.

2 Speak when the voice display window appears on the TV screen.

(SEARCH)* Search for content such as TV programmes, movies and other videos, or perform a web search by entering text in the search bar.

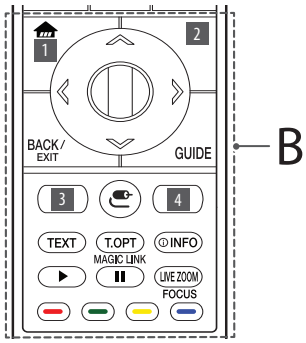

B

(HOME) Accesses the Home menu.

1 3 **RECENTS / RECENTS*** Shows the previous history.

2 **STB MENU** Displays the set-top box Home menu.

- When you are not watching via a set-top box: the display changes to the set-top box screen.

Wheel (OK) Press the center of the Wheel button to select a menu. You can change programmes by using the Wheel button.

Navigation buttons (up/down/left/right)

Press the up, down, left or right button to scroll the menu.

If you press buttons while the pointer is in use, the pointer will disappear from the screen and Magic Remote will operate like a general remote control. To display the pointer on the screen again, shake Magic Remote to the left and right.

BACK Returns to the previous level.

EXIT* Clears on-screen displays and returns to last input viewing.

GUIDE Shows programmes guide.

3 4 **Streaming Service buttons** Connects to the Video Streaming Service.

(INPUT) Changes the input source.

- Pressing and holding the button displays all the lists of external inputs.

2 4 **(Q. Settings)** Accesses the Quick Settings.

- Pressing and holding the button displays the **All Settings** menu.

Teletext buttons (TEXT, T.OPT) These buttons are used for teletext.

MAGIC LINK* Provides content related to the programme you are currently watching.

INFO Views the information of the current programme and screen.

Control buttons (▶, ❚❚) Controls media contents.

LIVE ZOOM By zooming in on the selected area, you can view it in full screen.

FOCUS* You can zoom in on the area where the remote control is pointed.

, , , These access special functions in some menus.

* **To use the button, press and hold for more than 3 seconds.**

(Depending on model)

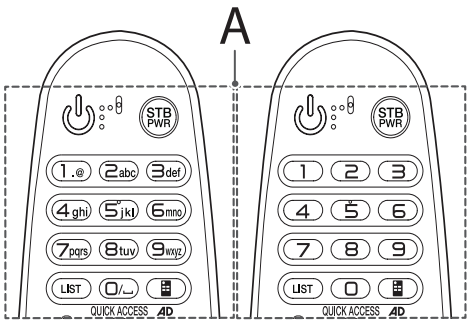

A

(POWER) Turns the TV on or off.

STB PWR You can turn your set-top box on or off by adding the set-top box to the universal remote control for your TV.

Number buttons Enters numbers.

Alphabet buttons Enters letters.

LIST Accesses the saved programmes list.

(Space) Opens an empty space on the screen keyboard.

(Screen Remote) Displays the Screen Remote.

- Accesses the Universal Control Menu.

QUICK ACCESS* You can access apps or Live TV using the number buttons corresponding to the features.

AD* Audio descriptions function will be enabled.

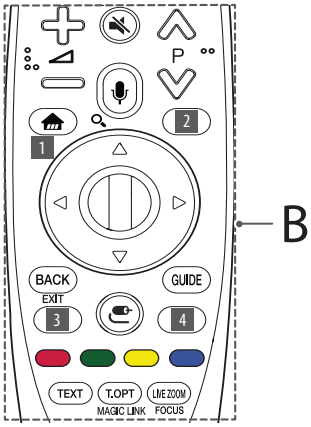

B

Adjusts the volume level.

P Scrolls through the saved programmes.

(MUTE) Mutes all sounds.

- Pressing and holding the button accesses the **Accessibility** menu.

(Voice recognition)

Network connection is required to use the voice recognition function.

1 Press the voice recognition button.

2 Speak when the voice display window appears on the TV screen.

(SEARCH)* Search for content such as TV programmes, movies and other videos, or perform a web search by entering text in the search bar.

(HOME) Accesses the Home menu.

1 3 **RECENTS / RECENTS*** Shows the previous history.

2 **STB MENU** Displays the set-top box Home menu.

- When you are not watching via a set-top box: the display changes to the set-top box screen.

Wheel (OK) Press the center of the Wheel button to select a menu. You can change programmes by using the Wheel button.

Navigation buttons (up/down/left/right)

Press the up, down, left or right button to scroll the menu.

If you press buttons while the pointer is in use, the pointer will disappear from the screen and Magic Remote will operate like a general remote control. To display the pointer on the screen again, shake Magic Remote to the left and right.

BACK Returns to the previous level.

EXIT* Clears on-screen displays and returns to last input viewing.

GUIDE Shows programmes guide.

ENGLISH

ENGLISH

3 4 **Streaming Service buttons** Connects to the Video Streaming Service.

(INPUT) Changes the input source.

- Pressing and holding the button displays all the lists of external inputs.

2 4 **(Q. Settings)** Accesses the Quick Settings.

- Pressing and holding the button displays the **All Settings** menu.

, , , These access special functions in some menus.

Teletext buttons (TEXT, T.OPT) These buttons are used for teletext.

MAGIC LINK* Provides content related to the programme you are currently watching.

LIVE ZOOM By zooming in on the selected area, you can view it in full screen.

FOCUS* You can zoom in on the area where the remote control is pointed.

* **To use the button, press and hold for more than 3 seconds.**

Registering magic remote

How to register the magic remote

To use the Magic Remote, first pair it with your TV.

1 Put batteries into the Magic Remote and turn the TV on.

2 Point the Magic Remote at your TV and press the **Wheel (OK)** on the remote control.

* If the TV fails to register the Magic Remote, try again after turning the TV off and back on.

How to deregister the magic remote

Press the **BACK** and **(HOME)** buttons at the same time, for five seconds, to unpair the Magic Remote with your TV.

* Pressing and holding the **GUIDE** button will let you cancel and re-register Magic Remote at once.

Licenses

Supported licenses may differ by model. For more information about licenses, visit *www.lg.com*.

HDMI HIGH-DEFINITION MULTIMEDIA INTERFACE

dts-HD

DOLBY AUDIO™

DOLBY ATMOS®

DOLBY VISION™

(Australia region only)

freeview+plus

FreeviewPlus provides access to content and services from the Freeview networks. The FreeviewPlus service provides a 7 + day EPG, all available Catch Up TV, recommendations and the ability to set reminders and favourites. FreeviewPlus is available by pressing the green button on the remote.

* FreeviewPlus uses HbbTV technology which combines broadcast and broadband. It requires an internet connection. Normal data usage charges and conditions apply.

Open source software notice information

To obtain the source code under GPL, LGPL, MPL, and other open source licenses, that is contained in this product, please visit *http://opensource.lge.com*.

In addition to the source code, all referred license terms, warranty disclaimers and copyright notices are available for download.

LG Electronics will also provide open source code to you on CD-ROM for a charge covering the cost of performing such distribution (such as the cost of media, shipping, and handling) upon email request to *opensource@lge.com*. This offer is valid for three (3) years from the date on which you purchased the product.

External control device setup

To obtain the external control device setup information, please visit *www.lg.com*.

Troubleshooting

Cannot control the TV with the remote control.

- Check the remote control sensor on the product and try again.
- Check if there is any obstacle between the product and the remote control.
- Check if the batteries are still working and properly installed (⊕ to ⊕, ⊖ to ⊖).

No image display and no sound is produced.

- Check if the product is turned on.
- Check if the power cord is connected to a wall outlet.
- Check if there is a problem in the wall outlet by connecting other products.

The TV turns off suddenly.

- Check the power control settings. The power supply may be interrupted.
- Check if the **Sleep Timer** / **Timer Power Off** is activated in the **Timers** settings.
- Check if the **Auto Power Off** is activated in the **General** → **Eco Mode** settings. (Depending on model)
- If there is no signal while the TV is on, the TV will turn off automatically after 15 minutes of inactivity.

When connecting to the PC (HDMI), '**No Signal**' or '**Invalid Format**' is displayed.

- Turn the TV off/on using the remote control.
- Reconnect the HDMI cable.
- Restart the PC with the TV on.

Abnormal Display

- If the product feels cold to the touch, there may be a small "flicker" when it is turned on. This is normal, there is nothing wrong with product.
- This panel is an advanced product that contains millions of pixels. You may see tiny black dots and/or brightly coloured dots (white, red, blue or green) at a size of 1 ppm on the panel. This does not indicate a malfunction and does not affect the performance and reliability of the product.
  This phenomenon also occurs in third-party products and is not subject to exchange or refund.
- You may find different brightness and color of the panel depending on your viewing position(left/right/top/down).
  This phenomenon occurs due to the characteristic of the panel. It is not related with the product performance, and it is not malfunction.
- Displaying a still image for a prolonged period of time may cause image sticking. Avoid displaying a fixed image on the TV screen for a long period of time.
- Some horizontal lines may appear when the Pixel Refresher feature is performed. It is normal and there is no need to be concerned.

Generated Sound

- "Cracking" noise: A cracking noise that occurs when watching or turning off the TV is generated by plastic thermal contraction due to temperature and humidity. This noise is common for products where thermal deformation is required.
- Electrical circuit humming/panel buzzing: A low level noise is generated from a high-speed switching circuit, which supplies a large amount of current to operate a product. It varies depending on the product.
  This generated sound does not affect the performance and reliability of the product.

ENGLISH

Specifications

Wireless module specifications

- As band channels can vary per country, the user cannot change or adjust the operating frequency. This product is configured for the regional frequency table.
- For consideration of the user, this device should be installed and operated with a minimum distance of 20 cm between the device and the body.

Wireless module(LGSBWAC72)specifications	
Wireless LAN (IEEE 802.11a/b/g/n/ac)	
Frequency range	Output power(Max.)
2400 to 2483.5 MHz 5150 to 5725 MHz 5725 to 5850 MHz (Not for EU)	14 dBm 16.5 dBm 11.5 dBm
Bluetooth	
Frequency range	Output power(Max.)
2400 to 2483.5 MHz	8.5 dBm

* "IEEE 802.11ac" is not available in all countries.

CI Module[1] **(W x H x D)**		100.0 mm x 55.0 mm x 5.0 mm
Environment condition	**Operating Temperature**	0 °C to 40 °C
	Operating Humidity	Less than 80 %
	Storage Temperature	-20 °C to 60 °C
	Storage Humidity	Less than 85 %

1 Only Satellite models.

	Digital TV (Depending on Country)	**Analogue TV** (Depending on Country)
Television system	DVB-T/T2[1] DVB-T/T2/C/S/S2[2]	PAL B/B, PAL B/G, PAL D/K, PAL-I SECAM B/G, SECAM D/K NTSC-M
Programme coverage	VHF, UHF, C-Band[2], Ku-Band[2]	VHF, UHF, CATV
Maximum number of storable programmes	DVB-T/T2 & Analogue TV : 3,000 DVB-S/S2 : 6,000	
External antenna impedance	75 Ω	

1 Only DVB-T2 support models.

2 Only DVB-T2/C/S2 support models.

- The energy information provided with the product is indicated in accordance with the regulations of each country. (Depending on Country)
  - The Energy consumption is measured in accordance with IEC 62087.
- Actual Energy consumption may vary depending on factors such as the type of video content being played and TV settings.

Regulatory

ENGLISH

WARNING!

Never place a television set in an unstable location. A television set may fall, causing serious personal injury or death. Many injuries, particularly to children, can be avoided by taking simple precautions such as:

- Using cabinets or stands recommended by the manufacturer of the television set.
- Only using furniture that can safely support the television set.
- Ensuring the television set is not overhanging the edge of the supporting furniture.
- Not placing the television set on tall furniture (for example, cupboards or bookcases) without anchoring both the furniture and the television set to a suitable support.
- Not placing the television set on cloth or other materials that may be located between the television set and supporting furniture.
- Educating children about the dangers of climbing on furniture to reach the television set or its controls.

If your existing television set is being retained and relocated, the same considerations as above should be applied.

Symbols

~	Refers to alternating current(AC).
⎓	Refers to direct current(DC).
⧈	Refers to class II equipment.
⏻	Refers to stand-by.
|	Refer to “ON” (power).
ϟ	Refers to dangerous voltage.

ENGLISH

Environmental information

(India region only)

Disposal of your old appliance (as per e-waste Rules)

1 When this crossed out wheeled bin symbol is depicted on the product and its operator's manual, it means the product is covered by the e-waste Management and Handling Rules, 2011 and are meant to be recycled, dismantled, refurbished or disposed off.

2 **Do's :**

a. The product is required to be handed over only to the authorized recycler for disposal.

b. Keep the product in isolated area, after it becomes non-functional/unrepairable so as to prevent its accidental breakage.

Don't :

a. The product should not be opened by the user himself/herself, but only by authorized service personnel.

b. The product is not meant for re-sale to any unauthorized agencies/scrap dealer/kabariwalah.

c. The product is not meant for mixing into household waste stream.

d. Do not keep any replaced spare part(s) from the product in exposed area.

3 Any disposal through unauthorized agencies/person will attract action under Environment (Protection) Act 1986.

4 "This product is complied with the requirement of Hazardous Substances as specified under Rule 13 (1) & (2) of the E-Waste (Management & Handling) Rules, 2011".

5 To locate a nearest collection centre or call for pick-up (limited area only) for disposal of this appliance, please contact Toll Free No. **1800-315-9999 / 1800-180-9999** for details. All collection centre and pick up facilities are done by third parties with **LG Electronics India Pvt. Ltd.** Merely as a facilitator. For more detailed information, please visit : *http://www.lge.com/in.*

पर्यावरणीय जानकारी

अपने पुराने निपटान के उपकरण (ई-अपशिष्ट नियम के अनुसार)

1. .जब इस काटे गए पहिये वाले बिन का चिन्ह किसी उपकरण और इसके ओपेरटर की पुस्तिका के साथ संलग्न होता है तो इसका मतलब है कि इसे "ई-अपशिष्ट "(प्रबंधन और हथालन) नियम २०११ के अंतर्गत सम्मिलित किया गया है , और इसे नवीनीकरणकरन ,विघटन और निपटान के लिए बनाया गया है ।

2. करें :

क . उपकरण को सिर्फ अधिकृत पुनः नवीनीकरणकर्ता को ही निपतारण करने हेतु हस्तांतरित करें ।

ख. जब उपकरण कार्यरत न हो इसे अलग क्षेत्र में रखें ताकि उपकरण से होने वाली दुर्घटनाओ से बचा जा सके ।

न करें :

क. इस उपकरण को स्वयं/खुद नहीं खोलना चाहिए ! उपकरण को केवल अधिकृत अधिकारी के द्वारा ही खोला जाना चाहिए ।

ख. इस उपकरण को पुनः बिक्री के लिए किसी भी कबाड़ीवाला / भंगार-वाला / अनाधिकृत संस्था को न दें ।

ग. इस उपकरण को किसी घरेलू अपशिष्ट सामान के साथ मिलाकर न रखें ।

घ. उपकरण के बदले हुए या आतंरिक पुरजो को खुले क्षेत्र में न रखें ।

3. यदि किसी अनाधिकृत विभाग या व्यक्ति के द्वारा निपटारन किया जाता है तो यह पर्यावरण (सुरक्षा) धारा १९८६ के अंतर्गत आता है ।

4. यह उत्पाद ई-अपशिष्ट (प्रबंधन और हथालन) नियम 2011 के अन्तर्गत 13(1) एवं (2) के तहत निर्दिष्ट खतरनाक पदार्थो की आवश्यकता का पालन करता है

5. उपरोक्त पदार्थो के निपटारन के लिए नजदीकी निपटारन संसथान (संकीर्ण क्षेत्र)में कॉल करें। अधिक जानकारी के लिए हमारे टोल फ्री नंबर 1800–315–9999 / 1800–180–9999 पर कॉल करें. सभी संग्रहण केंद्र व पिक-अप की सुविधाएं किसी थर्ड- पार्टी जो LG Electronics India Pvt. Ltd. को अपनी सेवाएं प्रदान कर रही हों, से करवाएं ।

ज्यादा जानकारी के लिए देखें वेब:साईट : http:://www.lge.com/in

LG
Life's Good

Record the model number and serial number of the TV.

Refer to the label on the back cover and quote this information to your dealer when requiring any service.

MODEL _____

SERIAL _____

OLED TV
OLED55E7*
OLED65E7*

Quick Start Guide

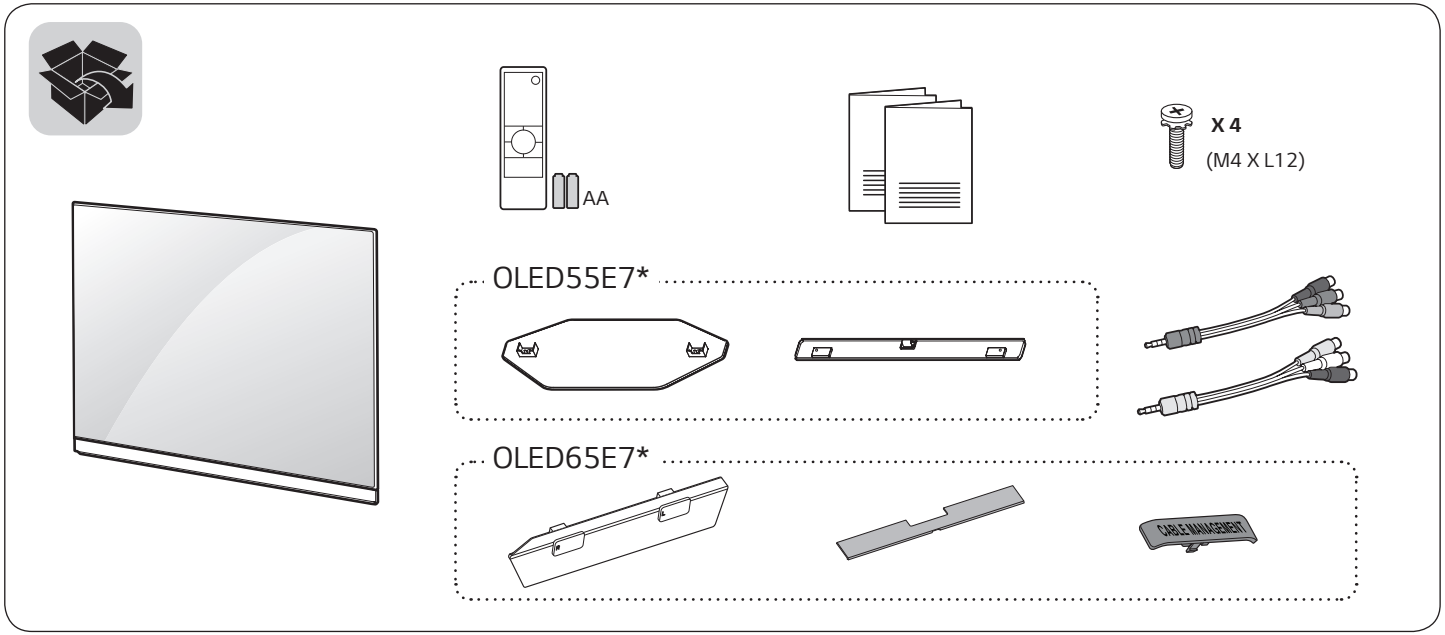

*Image may vary depending on model.

⊕ : Depending on model

Unpacking

Check your product box for the following items. If there are any missing accessories, contact the local dealer where you purchased your product. The illustrations in this manual may differ from the actual product and item.

www.lg.com

P/No: MFL69446178 (1702-REV00)

English

- Read **Safety and Reference.**
- For the power supply and power consumption, refer to the label attached to the product.

USING THE USER GUIDE

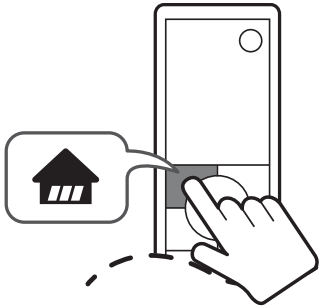

Press the button to access home menu

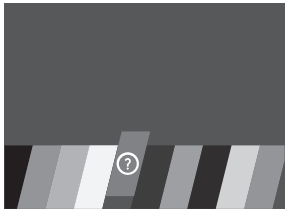

Navigate & Select User Guide

Refer User Guide for detail information

OLED55E7*

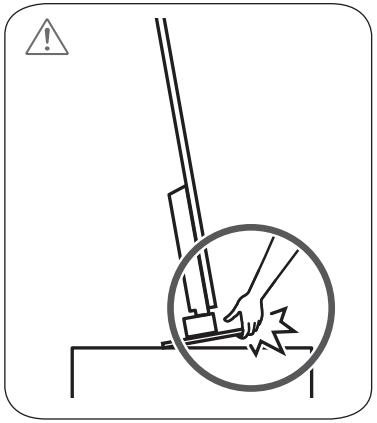

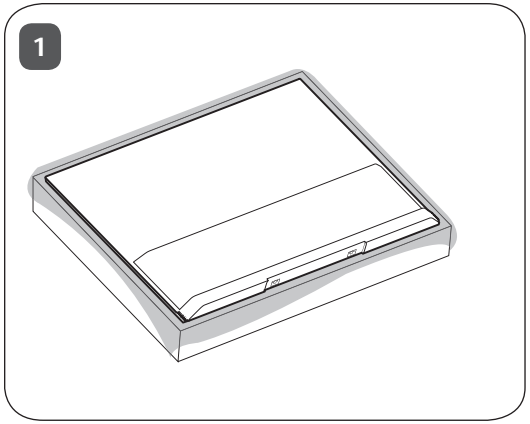

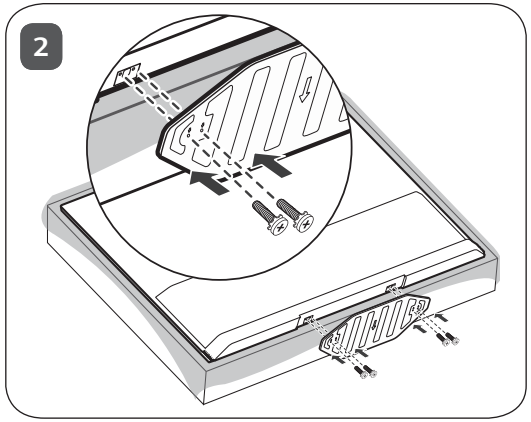

CAUTION

Image shown may differ from your TV

When attaching the stand to the TV set, place the screen facing down on a cushioned table or flat surface to protect the screen from scratches.

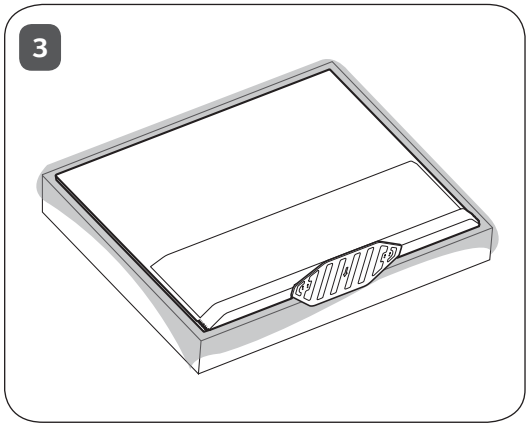

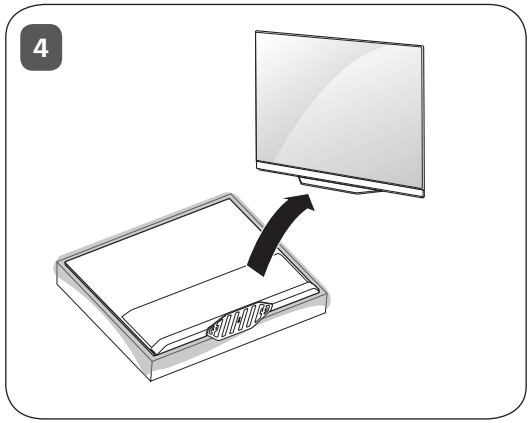

OLED65E7*

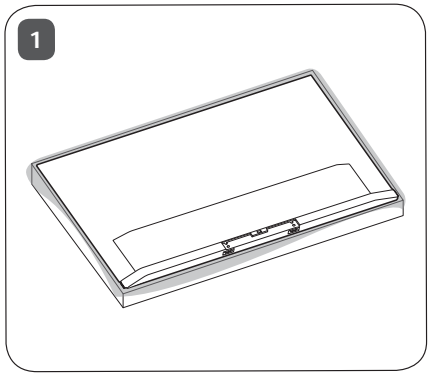

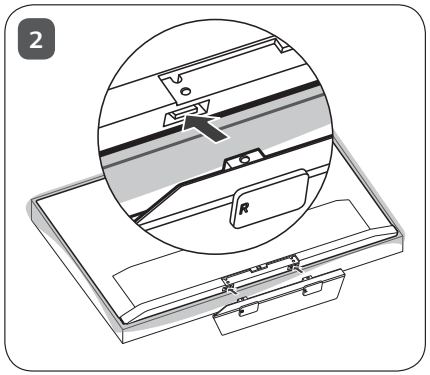

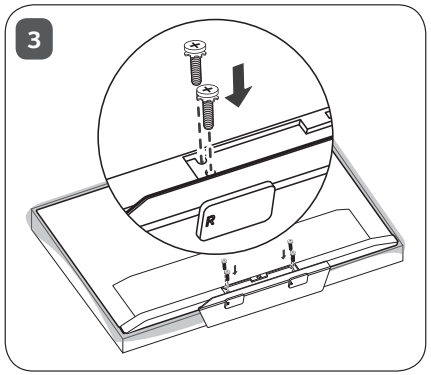

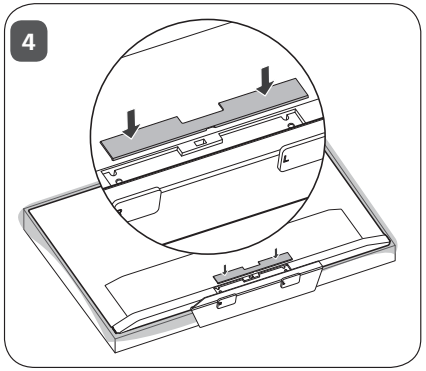

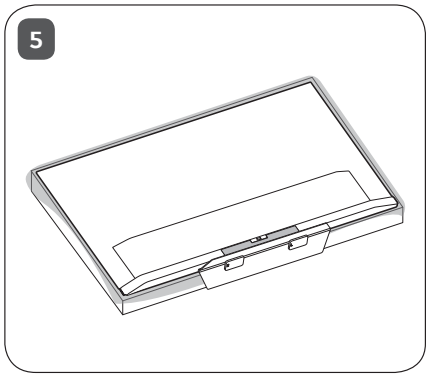

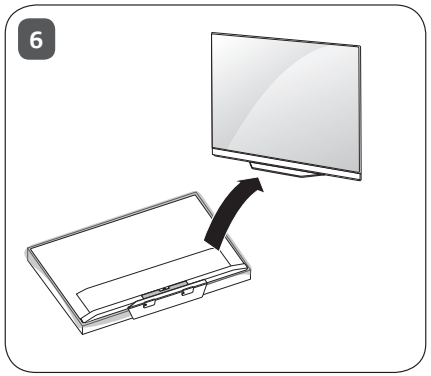

CAUTION

Image shown may differ from your TV

When attaching the stand to the TV set, place the screen facing down on a cushioned table or flat surface to protect the screen from scratches.

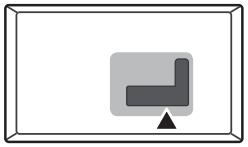

CAUTION

Image shown may vary depending on model.
All connection cables & devices shown in the picture are not included along with the TV set.

ANTENNA / CABLE IN

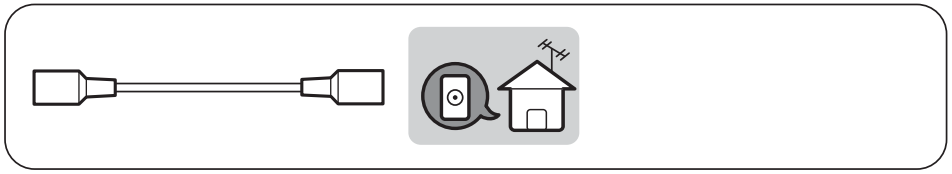

HDMI IN

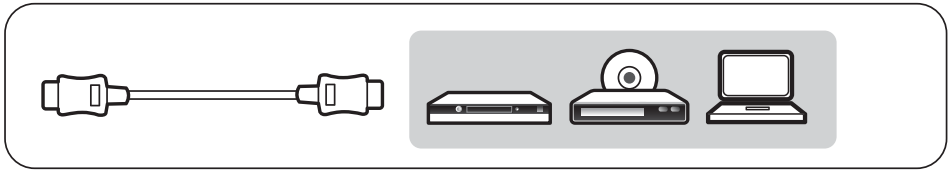

HDMI IN/ARC

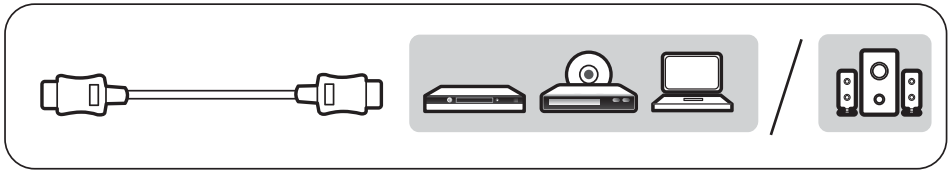

USB IN

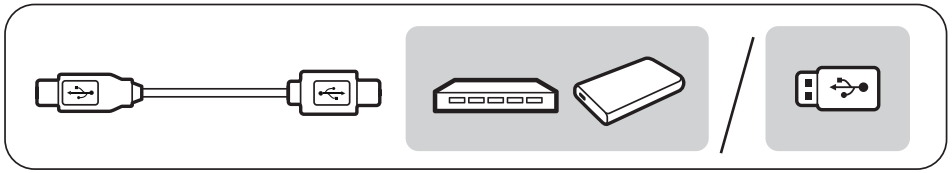

LAN

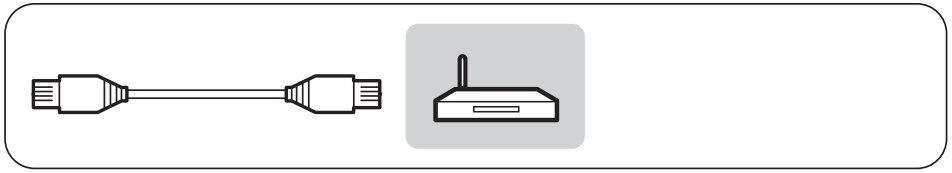

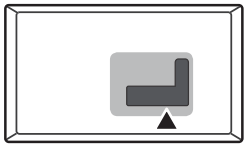

AUDIO OUT/
H/P OUT

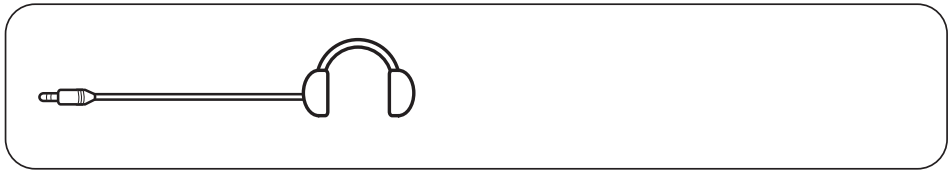

OPTICAL DIGITAL
AUDIO OUT

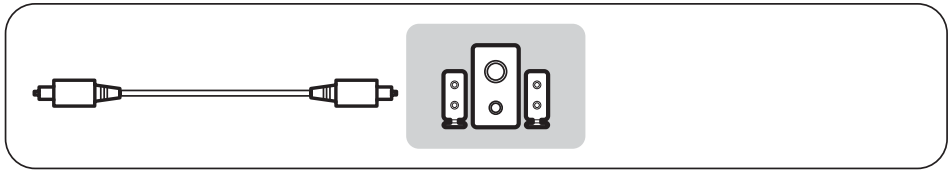

NOTE

Image shown may vary depending on model.
All connection cables & devices shown in the picture are not included along with the TV set.

NOTE

- Some USB Hubs may not work. If a USB device connected using a USB Hub is not detected, connect it to the USB port on the TV directly.
- Connect the external power source if your USB is needed.

NOTE

- Do not look into to the it is optical output port, Looking at the laser beam may damage your vision.
- Audio with ACP (Audio Copy Protection) function may block digital audio output.

ARC (Audio Return Channel)

- An external audio device that supports SIMPLINK and ARC must be connected using HDMI IN/ ARC port.
- When connected with a high-speed HDMI cable, the external audio device that supports ARC outputs SPDIF audio without additional audio cable and supports the SIMPLINK function.

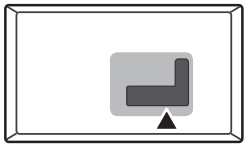

CAUTION

Image shown may vary depending on model.
All connection cables & devices shown in the picture are not included along with the TV set.

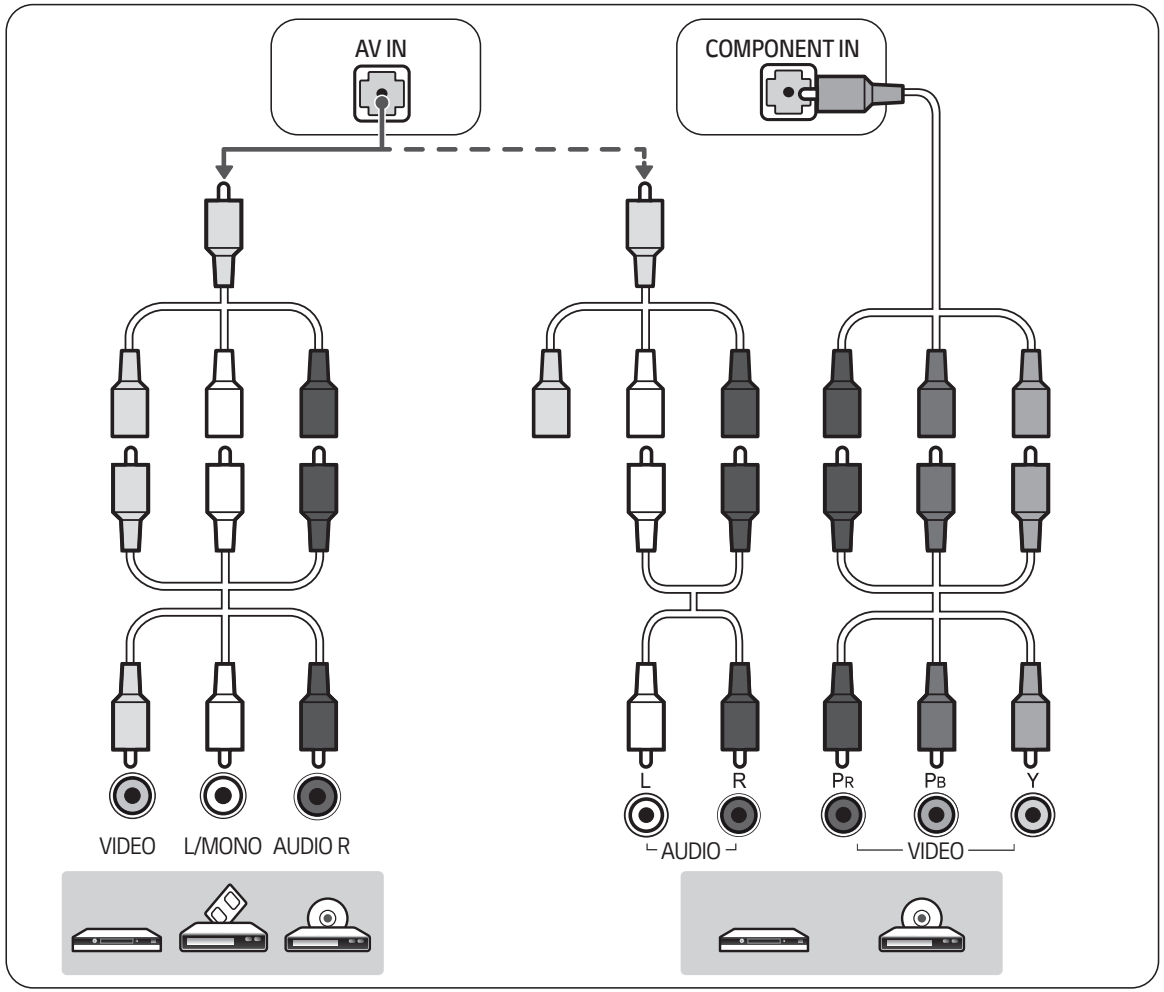

OLED55E7*

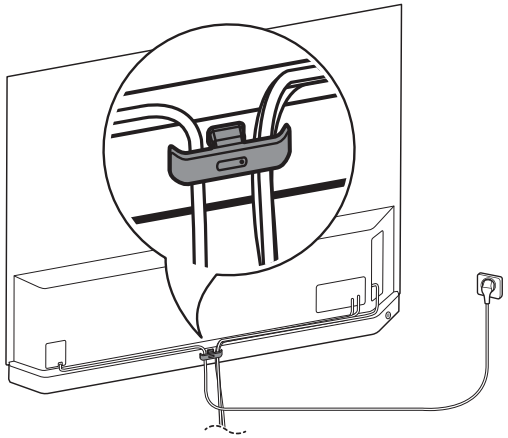

NOTE

Image shown may vary depending on model.

OLED65E7*

1

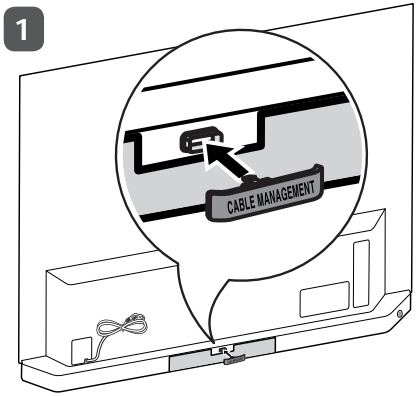

2

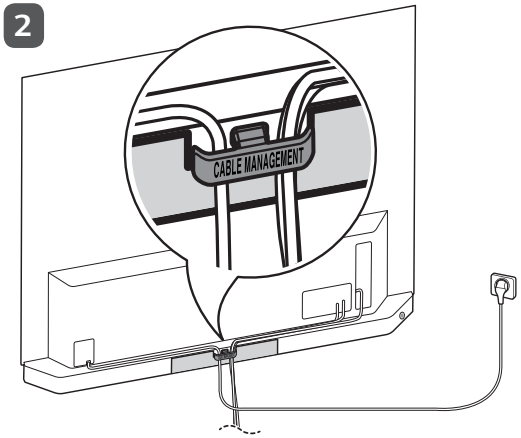

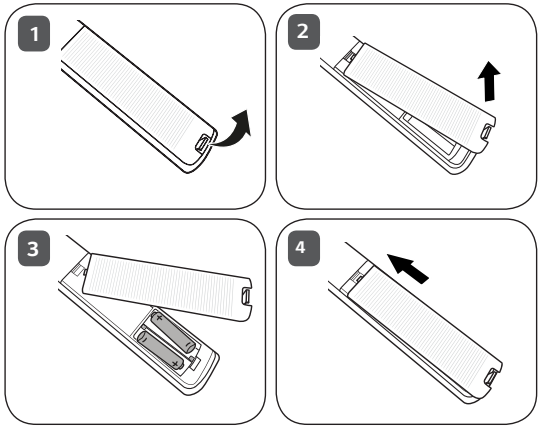

NOTE

Image shown may vary depending on model.

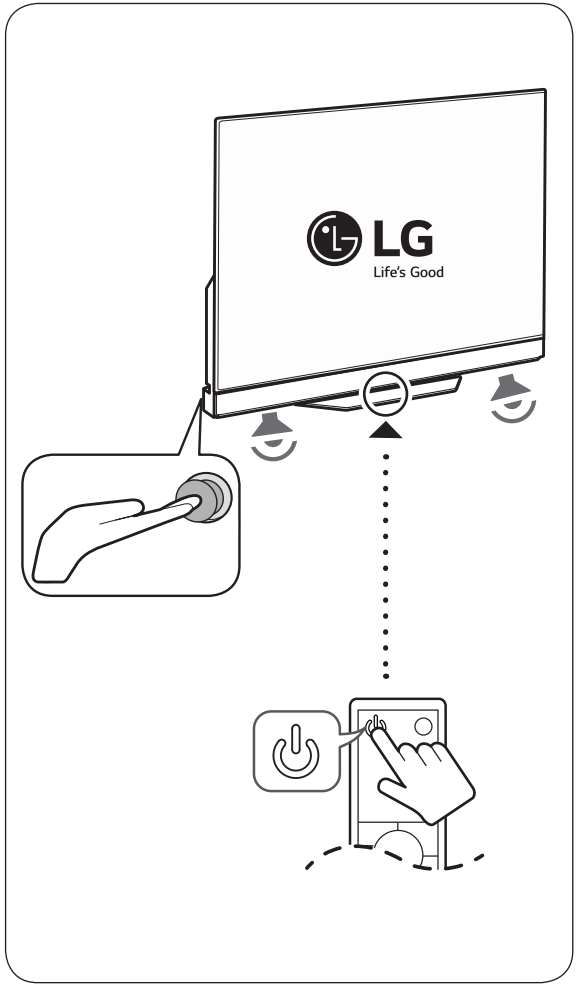

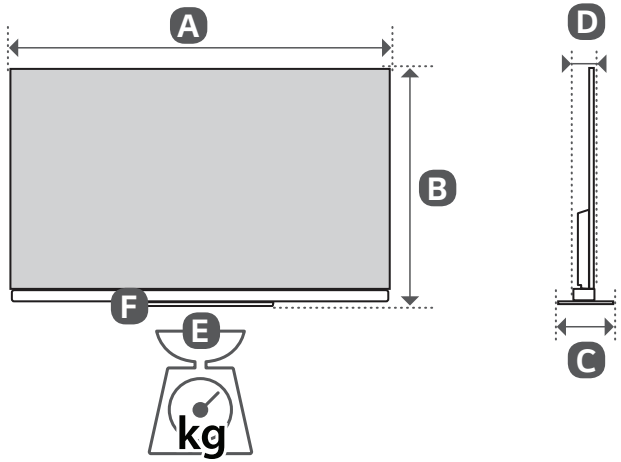

	A (mm)	B (mm)	C (mm)	D (mm)	E (kg)	E - F (kg)
OLED55E7T-T OLED55E7V-T OLED55E7Y-T	1237	767	175	56.7	18.5	17.1
Power requirement				AC 100-240 V ~ 50 / 60 Hz		

NOTE

Image shown may vary depending on model.

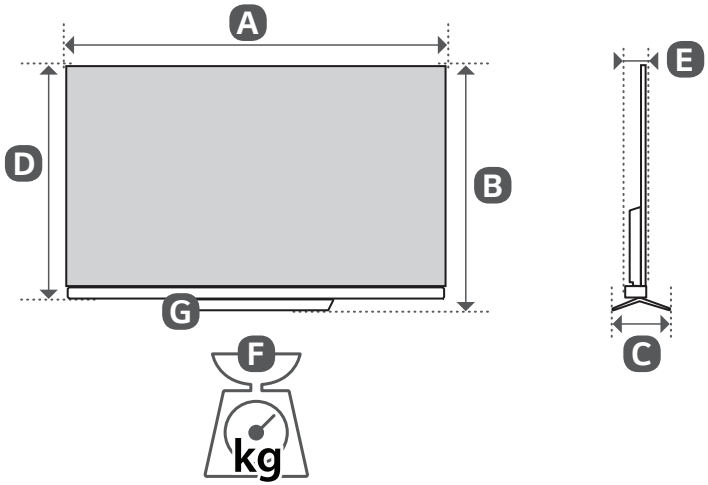

	A (mm)	B (mm)	C (mm)	D (mm)	E (mm)	F (kg)	F - G (kg)
OLED65E7T-T OLED65E7V-T OLED65E7Y-T	1461	904	195	877	62	23.1	21.2
Power requirement					AC 100-240 V ~ 50 / 60 Hz		

NOTE

Image shown may vary depending on model.

MFL69446178

IN002043

LG
Life's Good

OWNER'S MANUAL

EXTERNAL CONTROL DEVICE SETUP

Please read this manual carefully before operating the set and retain it for future reference.

www.lg.com

ENGLISH

KEY CODES

- This feature is not available for all models.

Code (Hexa)	Function	Note	Code (Hexa)	Function	Note
00	CH +, PR +	R/C Button	53	List	R/C Button
01	CH -, PR -	R/C Button	5B	Exit	R/C Button
02	Volume +	R/C Button	60	PIP(AD)	R/C Button
03	Volume -	R/C Button	61	Blue	R/C Button
06	> (Arrow Key / Right Key)	R/C Button	63	Yellow	R/C Button
07	< (Arrow Key / Left Key)	R/C Button	71	Green	R/C Button
08	Power	R/C Button	72	Red	R/C Button
09	Mute	R/C Button	79	Ratio / Aspect Ratio	R/C Button
0B	Input	R/C Button	91	AD (Audio Description)	R/C Button
0E	SLEEP	R/C Button	9E	LIVE MENU	R/C Button
0F	TV, TV/RAD	R/C Button	7A	User Guide	R/C Button
10 - 19	* Number Key 0 - 9	R/C Button	7C	Smart / Home	R/C Button
1A	Q.View / Flashback	R/C Button	7E	SIMPLINK	R/C Button
1E	FAV (Favorite Channel)	R/C Button	8E	►► (Forward)	R/C Button
20	Text (Teletext)	R/C Button	8F	◄◄ (Rewind)	R/C Button
21	T. Opt (Teletext Option)	R/C Button	AA	Info	R/C Button
28	Return (BACK)	R/C Button	AB	Program Guide	R/C Button
30	AV (Audio / Video) Mode	R/C Button	B0	► (Play)	R/C Button
39	Caption/Subtitle	R/C Button	B1	■ (Stop / File List)	R/C Button
40	Λ (Arrow Key / Cursor Up)	R/C Button	B5	RECENT	R/C Button
41	V (Arrow Key / Cursor Down)	R/C Button	BA	❚❚ (Freeze / Slow Play / Pause)	R/C Button
42	My Apps	R/C Button	BB	Soccer	R/C Button
43	Menu / Settings	R/C Button	BD	● (REC)	R/C Button
44	OK / Enter	R/C Button	DC	3D	R/C Button
45	Q.Menu	R/C Button	99	AutoConfig	R/C Button
4C	List, - (ATSC Only)	R/C Button	9F	App / *	R/C Button
4D	PICTURE	R/C Button	9B	TV / PC	R/C Button
52	SOUND	R/C Button			

* Key code 4C (0x4C) is available on ATSC/ISDB models which use major/minor channel. (For South Korea, Japan, North America, Latin America except Colombia models)

EXTERNAL CONTROL DEVICE SETUP

- Image shown may differ from your TV.

Connect the USB to Serial converter/RS-232C input jack to an external control device (such as a computer or an A/V control system) to control the product's functions externally.

Note: The type of control port on the TV can be different between model series.

* Please be advised that not all models support this type of connectivity.
* Cable is not provided.

USB to Serial converter with USB Cable

USB Type

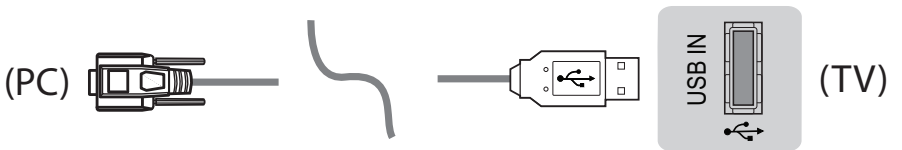

- LGTV supports PL2303 chip-based (Vendor ID : 0x0557, Product ID : 0x2008) USB to serial converter which is not made nor provided by LG.
- It can be purchased from computer stores that carry accessories for IT support professionals.

RS-232C With RS232C Cable

DE9 (D-Sub 9pin) Type

- You need to purchase the RS-232C (DE9, D-Sub 9pin female-to-female type) to RS-232C cable required for the connection between the PC and the TV, which is specified in the manual.

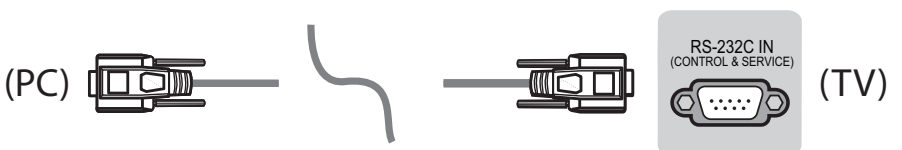

The connection interface may differ from your TV.

Phone jack Type

- You need to purchase the phone-jack to RS-232 cable required for the connection between the PC and the TV, which is specified in the manual.

* For other models, connect to the USB port.

* The connection interface may differ from your TV.

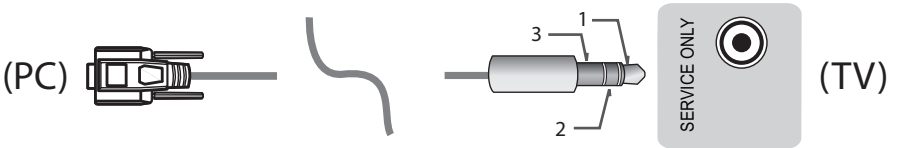

- or

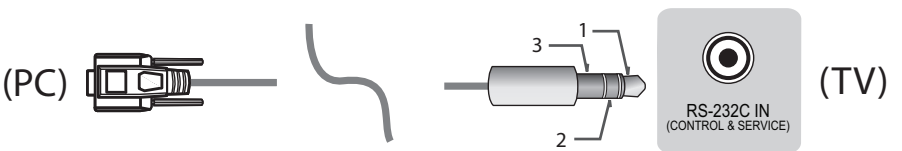

Customer Computer

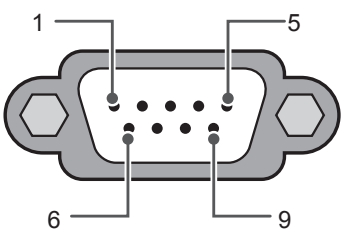

RS-232C
(Serial port)

RS-232C configurations

3-Wire Configurations(Not standard)

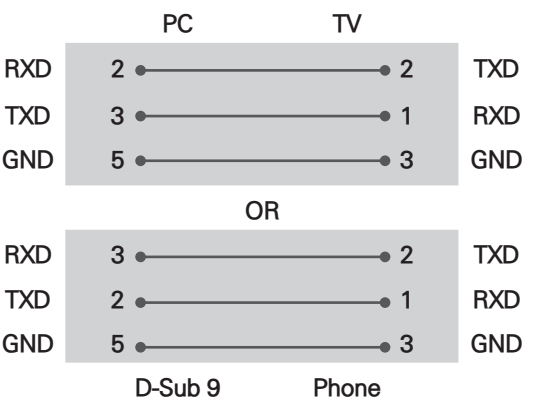

Set ID

For Set ID number, see "**Real Data Mapping**" on p.6

1. Press **SETTINGS** to access the main menus.
2. Press the Navigation buttons to scroll to **(*General → About this TV or OPTION)** and press **OK**.
3. Press the Navigation buttons to scroll to **SET ID** and press **OK**.
4. Scroll left or right to select a set ID number and select **CLOSE**. The adjustment range is 1-99.
5. When you are finished, press **EXIT**.
   * (Depending on model)

Communication Parameters

- Baud rate : 9600 bps (UART)
- Data length : 8 bits
- Parity : None
- Stop bit : 1 bit
- Communication code : ASCII code
- Use a crossed (reverse) cable.

Command reference list

(Depending on model)

	COMMAND1	COMMAND2	DATA (Hexadecimal)		COMMAND1	COMMAND2	DATA (Hexadecimal)
01. Power*	k	a	00 to 01	15. Balance	k	t	00 to 64
02. Aspect Ratio	k	c	(p.7)	16. Color (Colour) Temperature	x	u	00 to 64
03. Screen Mute	k	d	(p.7)	17. ISM Method (Only Plasma TV)	j	p	(p.8)
04. Volume Mute	k	e	00 to 01	18. Equalizer	j	v	(p.8)
05. Volume Control	k	f	00 to 64	19. Energy Saving	j	q	00 to 05
06. Contrast	k	g	00 to 64	20. Tune Command	m	a	(p.9)
07. Brightness	k	h	00 to 64	21. Channel (Programme) Add/Del(Skip)	m	b	00 to 01
08. Color/ Colour	k	i	00 to 64	22. Key	m	c	Key Codes
09. Tint	k	j	00 to 64	23. Control Backlight, Control Panel Light	m	g	00 to 64
10. Sharpness	k	k	00 to 32	24. Input select (Main)	x	b	(p.11)
11. OSD Select	k	l	00 to 01	25. 3D (Only 3D models)	x	t	(p.11)
12. Remote Control Lock Mode	k	m	00 to 01	26. Extended 3D (Only 3D models)	x	v	(p.12)
13. Treble	k	r	00 to 64	27. Auto Configure	j	u	(p.12)
14. Bass	k	s	00 to 64				

* Note: During playing or recording media, all commands except Power (ka) and Key (mc) are not executed and treated as NG.
With RS232C cable, TV can communicate "ka command" in power-on or power-off status. but with USB-to-Serial converter cable, the command works only if TV is on.

Transmission / Receiving Protocol

Transmission

[Command1][Command2][ ][Set ID][ ][Data][Cr]

[Command 1] : First command to control the TV. (j, k, m or x)
[Command 2] : Second command to control the TV.
[Set ID] : You can adjust the [Set ID] to choose desired monitor ID number in option menu. Adjustment range in TV is 1 to 99. If [Set ID] value is selected to '0', every connected set can be controlled.
* [Set ID] is indicated as decimal (1 to 99) on menu and as Hexadecimal (0x00 to 0x63) on transmission/receiving protocol.
[DATA] : To transmit command data (hexadecimal). Transmit 'FF' data to read status of command.
[Cr] : Carriage Return - ASCII code '0x0D'
[ ] : Space – ASCII code '0x20'

OK Acknowledgement

[Command2][ ][Set ID][ ][OK][Data][x]

* The set transmits ACK (acknowledgement) based on this format when receiving normal data. At this time, if the data is data read mode, it indicates present status data. If the data is data write mode, it returns the data of the PC computer.

Error Acknowledgement

[Command2][ ][Set ID][ ][NG][Data][x]

* The set transmits ACK (acknowledgement) based on this format when receiving abnormal data from non-viable functions or communication errors.

Data 00: Illegal Code

Real data mapping (Hexadecimal b Decimal)

* When you enter the [data] in hexadecimal, refer to following conversion table.
* Channel Tune (ma) Command uses two-byte hexadecimal value([data]) to select channel number.

00 : Step 0	32 : Step 50 (Set ID 50)	FE : Step 254
01 : Step 1 (Set ID 1)	33 : Step 51 (Set ID 51)	FF : Step 255
...	...	...
0A : Step 10 (Set ID 10)	63 : Step 99 (Set ID 99)	01 00 : Step 256
...	...	...
0F : Step 15 (Set ID 15)	C7 : Step 199	27 0E : Step 9998
10 : Step 16 (Set ID 16)	C8 : Step 200	27 0F : Step 9999
...	...	...

* Commands may work differently depending on model and signal.

01. Power (Command: k a)

► To control Power *On or Off of the set.

Transmission[k][a][ ][Set ID][ ][Data][Cr]

Data 00 : Power Off 01 : *Power On

Ack [a][ ][Set ID][ ][OK/NG][Data][x]

► To Show TV is Power On or *Off

Transmission [k][a][ ][Set ID][ ][FF][Cr]

Ack [a][ ][Set ID][ ][OK][Data][x]

* Similarly, if other functions transmit 'FF' data based on this format, Acknowledgement feedback presents status about each function.

02. Aspect Ratio (Command: k c)
(Main Picture Size)

► To adjust the screen format. (Main picture format) You can also adjust the screen format using the Aspect Ratio in the Q.MENU. or PICTURE menu.

Transmission [k][c][ ][Set ID][ ][Data][Cr]

Data 01 : Normal screen (4:3)
02 : Wide screen (16:9)
04 : Zoom
05 : Zoom 2 (Latin America except Colombia Only)
06 : Set by Program/ Original
07 : 14:9 (Europe, Colombia, Mid-East, Asia except South Korea and Japan)
09 : * Just Scan
0B : Full Wide (Europe, Colombia, Mid-East, Asia except South Korea and Japan)
10 to 1F : Cinema Zoom 1 to 16
0c : 21:9 (Depending on model)

Ack [c][ ][Set ID][ ][OK/NG][Data][x]

* Using the PC input, you select either 16:9 or 4:3 screen aspect ratio.
* In DTV/HDMI/Component mode (high-definition), Just Scan is available.
* Full wide mode may work differently based on model and is supported for DTV fully, and ATV, AV partially.

03. Screen Mute (Command: k d)

► To select screen mute on/off.

Transmission [k][d][ ][Set ID][ ][Data][Cr]

Data 00 : Screen mute off (Picture on) Video mute off
01 : Screen mute on (Picture off)
10 : Video mute on

Ack [d][ ][Set ID][ ][OK/NG][Data][x]

* In case of video mute on only, TV will display On Screen Display(OSD). But, in case of Screen mute on, TV will not display OSD.

04. Volume Mute (Command: k e)

► To control volume mute on/off.
You can also adjust mute using the MUTE button on remote control.

Transmission [k][e][ ][Set ID][ ][Data][Cr]

Data 00 : Volume mute on (Volume off)
01 : Volume mute off (Volume on)

Ack [e][ ][Set ID][ ][OK/NG][Data][x]

05. Volume Control (Command: k f)

► To adjust volume.
You can also adjust volume with the volume buttons on remote control.

Transmission [k][f][ ][Set ID][ ][Data][Cr]

Data Min : 00 to Max : 64

Ack [f][ ][Set ID][ ][OK/NG][Data][x]

06. Contrast (Command: k g)

► To adjust screen contrast.
You can also adjust contrast in the PICTURE menu.

Transmission [k][g][ ][Set ID][ ][Data][Cr]

Data Min : 00 to Max : 64

Ack [g][ ][Set ID][ ][OK/NG][Data][x]

07. Brightness (Command: k h)

► To adjust screen brightness.
You can also adjust brightness in the PICTURE menu.

Transmission [k][h][ ][Set ID][ ][Data][Cr]

Data Min : 00 to Max : 64

Ack [h][ ][Set ID][ ][OK/NG][Data][x]

08. Color/Colour (Command: k i)

► To adjust the screen Color(Colour).
You can also adjust colour in the PICTURE menu.

Transmission [k][i][ ][Set ID][ ][Data][Cr]

Data Min : 00 to Max : 64

Ack [i][ ][Set ID][ ][OK/NG][Data][x]

09. Tint (Command: k j)

► To adjust the screen tint.
You can also adjust tint in the PICTURE menu.

Transmission [k][j][ ][Set ID][ ][Data][Cr]

Data Red : 00 to Green : 64

Ack [j][ ][Set ID][ ][OK/NG][Data][x]

10. Sharpness (Command: k k)

► To adjust the screen sharpness.
You can also adjust sharpness in the PICTURE menu.

Transmission [k][k][ ][Set ID][ ][Data][Cr]

Data Min : 00 to Max : 32

Ack [k][ ][Set ID][ ][OK/NG][Data][x]

11. OSD Select (Command: k l)

► To select OSD (On Screen Display) on/off when controlling remotely.

Transmission [k][l][ ][Set ID][ ][Data][Cr]

Data 00 : OSD off 01 : OSD on

Ack [l][ ][Set ID][ ][OK/NG][Data][x]

12. Remote control lock mode (Command: k m)

► To lock the front panel controls on the monitor and remote control.

Transmission [k][m][ ][Set ID][ ][Data][Cr]

Data 00 : Lock off 01 : Lock on

Ack [m][ ][Set ID][ ][OK/NG][Data][x]

* If you are not using the remote control, use this mode.
When main power is off & on (plug-off and plug-in, after 20 - 30 seconds), external control lock is released.
* In the standby mode (DC off by off timer or ‘ka’, ‘mc’ command), and if key lock is on, TV will not turn on by power on key of IR & Local Key.

13. Treble (Command: k r)

► To adjust treble.
You can also adjust in the AUDIO menu.

Transmission [k][r][ ][Set ID][ ][Data][Cr]

Data Min : 00 to Max : 64

Ack [r][ ][Set ID][ ][OK/NG][Data][x]

* (Depending on model)

14. Bass (Command: k s)

► To adjust Bass.
You can also adjust in the AUDIO menu.

Transmission [k][s][ ][Set ID][ ][Data][Cr]

Data Min : 00 to Max : 64

Ack [s][ ][Set ID][ ][OK/NG][Data][x]

* (Depending on model)

15. Balance (Command: k t)

► To adjust balance.
You can also adjust balance in the AUDIO menu.

Transmission [k][t][ ][Set ID][ ][Data][Cr]

Data Min : 00 to Max : 64

Ack [t][ ][Set ID][ ][OK/NG][Data][x]

16. Color(Colour) Temperature (Command: x u)

► To adjust colour temperature. You can also adjust Color(Colour) Temperature in the PICTURE menu.

Transmission [x][u][ ][Set ID][ ][Data][Cr]

Data Min : 00 to Max : 64

Ack [u][ ][Set ID][ ][OK/NG][Data][x]

17. ISM Method (Command: j p) (Only Plasma TV)

► To control the ISM method. You can also adjust ISM Method in OPTION menu.

Transmission [j][p][ ][Set ID][ ][Data][Cr]

Data Min : 02: Orbiter
08: Normal
20: Color(Colour) Wash

Ack [p][ ][Set ID][ ][OK/NG][Data][x]

18. Equalizer (Command : j v)

► Adjust EQ of the set.

Transmission [j][v][ ][Set ID][ ][Data][Cr]

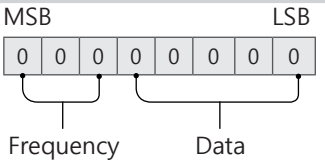

7	6	5	Frequency	4	3	2	1	0	Step
0	0	0	1st Band	0	0	0	0	0	0(decimal)
0	0	1	2nd Band	0	0	0	0	1	1(decimal)
0	1	0	3rd Band	...	...	...	...	...	...
0	1	1	4th Band	1	0	0	1	1	19(decimal)
1	0	0	5th Band	1	0	1	0	1	20(decimal)

Acknowledgement [v][ ][Set ID][ ][OK/NG][Data][x]

* It depends on model, and can adjust when sound mode is EQ adjustable value.

19. Energy Saving (Command: j q)

► To reduce the power consumption of the TV. You can also adjust Energy Saving in PICTURE menu.

Transmission [j][q][ ][Set ID][ ][Data][Cr]

Data
- 00 : Off
- 01 : Minimum
- 02 : Medium
- 03 : Maximum
- 04 : Auto (For LCD TV / LED TV) / Intelligent sensor (For PDP TV)
- 05 : Screen off

* (Depending on model)

Ack [q][ ][Set ID][ ][OK/NG][Data][x]

20. Tune Command (Command: m a)

* This command may work differently depending on model and signal.

• For Europe, Mid-East, Colombia, Asia except South Korea and Japan Model

► Select channel to following physical number.

Transmission [m][a][ ][Set ID][ ][Data 00][ ]
[Data 01][ ][Data 02][Cr]

* Analog Antenna/Cable

[Data 00][Data 01] Channel Data
Data 00 : High byte channel data
Data 01 : Low byte channel data
- 00 00 ~ 00 C7 (Decimal : 0 ~ 199)

Data 02 : Input Source (Analog)
- 00 : Antenna TV (ATV)
- 80 : Cable TV (CATV)

* Digital Antenna/Cable/Satellite

[Data 00][Data 01]: Channel Data
Data 00 : High Channel data
Data 01 : Low Channel data
- 00 00 ~ 27 0F (Decimal: 0 ~ 9999)

Data 02 : Input Source (Digital)
- 10 : Antenna TV (DTV)
- 20 : Antenna Radio (Radio)
- 40 : Satellite TV (SDTV)
- 50 : Satellite Radio (S-Radio)
- 90 : Cable TV (CADTV)
- a0 : Cable Radio (CA-Radio)

* Tune Command Examples:

1. Tune to the Analog antenna (PAL) Channel 10.
   Set ID = All = 00
   Data 00 & 01 = Channel Data is 10 = 00 0a
   Data 02 = Analog Antenna TV = 00
   Result = **ma 00 00 0a 00**

2. Tune to the digital antenna (DVB-T) Channel 01.
   Set ID = All = 00
   Data 00 & 01 = Channel Data is 1 = 00 01
   Data 02 = Digital Antenna TV = 10
   Result = **ma 00 00 01 10**

3. Tune to the satellite (DVB-S) Channel 1000.
   Set ID = All = 00
   Data 00 & 01 = Channel Data is 1000 = 03 E8
   Data 02 = Digital Satellite TV = 40
   Result = **ma 00 03 E8 40**

Ack [a][ ][Set ID][ ][OK][Data 00][Data 01]
[Data 02][x][a][ ][Set ID][ ][NG][Data 00][x]

• For South Korea, North/Latin America except Colombia Model

► To tune channel to following physical/major/minor number.

Transmission [m][a][ ][0][ ][Data00][ ][Data01]
[ ][Data02][ ][Data03][ ][Data04][ ][Data05][Cr]

Digital channels have a Physical, Major, and Minor channel number. The Physical number is the actual digital channel number, the Major is the number that the channel should be mapped to, and the Minor is the sub-channel. Since the ATSC tuner automatically maps the channel from the Major / Minor number, the Physical number is not required when sending a command in Digital.

* Analog Antenna/Cable

Data 00 : Physical Channel Number
- Antenna (ATV) : 02~45 (Decimal: 2 ~ 69)
- Cable (CATV) : 01, 0E~7D (Decimal : 1, 14~125)

[Data 01 ~ 04]: Major/Minor Channel Number
Data 01 & 02: xx (Don't care)
Data 03 & 04: xx (Don't care)
Data 05: Input Source (Analog)
- 00 : Antenna TV (ATV)
- 01 : Cable TV (CATV)

* Digital Antenna/Cable

Data 00 : xx (Don't care)

[Data 01][Data 02]: Major Channel Number
Data 01 : High byte Channel Data
Data 02 : Low byte Channel Data
- 00 01 ~ 27 0F (Decimal: 1 ~ 9999)

[Data 03][Data 04]: Minor Channel Number
Data 03 : High byte Channel Data
Data 04 : Low byte Channel Data

Data 05 : Input Source (Digital)
- 02 : Antenna TV (DTV) – Use Physical Channel Number
- 06 : Cable TV (CADTV) – Use Physical Channel Number
- 22 : Antenna TV (DTV) – Don’t Use Physical Channel Number
- 26 : Cable TV (CADTV) - Don’t Use Physical Channel Number
- 46 : Cable TV (CADTV) – Use Physical/Major Channel Number Only (One Part Channel)
- 66 : Cable TV (CADTV) – Use Major Channel Number Only (One Part Channel)
- 0b : Cable DTV Plus – Use Physical Channel Number
- 2b : Cable DTV Plus – Don’t Use Physical Channel Number
- 4b : Cable DTV Plus – Use Physical/Major Channel Number Only (One Part Channel)
- 6b : Cable DTV Plus – Use Major Channel Number Only (One Part Channel)

Two bytes are available for each major and minor channel data, but usually the low byte is used alone (high byte is 0).

* Tune Command Examples:

1. Tune to the Analog cable (NTSC) channel 35.
   Set ID = All = 00
   Data 00 = Channel Data is 35 = 23
   Data 01 & 02 = No Major = 00 00
   Data 03 & 04 = No Minor = 00 00
   Data 05 = Analog Cable TV = 01
   Total = **ma 00 23 00 00 00 00 01**

2. Tune to the digital antenna (ATSC) channel 30-3.
   Set ID = All = 00
   Data 00 = Don’t know Physical = 00
   Data 01 & 02 = Major is 30 = 00 1E
   Data 03 & 04 = Minor is 3 = 00 03
   Data 05 = Digital Antenna TV = 22
   Total = **ma 00 00 00 1E 00 03 22**

Ack [a][ ][Set ID][ ][OK][Data 00][Data 01]
[Data 02][Data 03][Data 04][Data 05]
[x][a][ ][Set ID][ ][NG][Data 00][x]

- For Japan Model

► To tune channel to following physical/major/minor number.

Transmission [m][a][ ][0][ ][Data00][ ][Data01]
[ ][Data02][ ][Data03][ ][Data04][ ][Data05][Cr]

* Digital Antenna/Satellite
Data 00: xx (Don't care)

[Data 01][Data 02]: Major Channel Number
Data 01: High byte Channel Data
Data 02: Low byte Channel Data
- 00 01 ~ 27 0F (Decimal: 1 ~ 9999)

[Data 03][Data 04]: Minor/Branch Channel Number (Don’t care in Satellite)
Data 03: High byte Channel Data
Data 04: Low byte Channel Data

Data 05 : Input Source (Digital/Satellite for Japan)
- 02 : Antenna TV (DTV)
- 42 : Antenna TV (DTV) – Use Physical/Major Channel Number Only (One Part Channel)
- 62 : Antenna TV (DTV) – Use Major Channel Number Only (One Part Channel)
- 07 : BS (Broadcasting Satellite)
- 08 : CS1 (Communication Satellite 1)
- 09 : CS2 (Communication Satellite 2)

* Tune Command Examples:

1 Tune to the digital antenna (ISDB-T) channel 17-1.
   Set ID = All = 00
   Data 00 = Don’t know Physical = 00
   Data 01 & 02 = Major is 17 = 00 11
   Data 03 & 04 = Minor/Branch is 1 = 00 01
   Data 05 = Digital Antenna TV = 02
   Total = **ma 00 00 00 11 00 01 02**

2. Tune to the BS (ISDB-BS) channel 30.
   Set ID = All = 00
   Data 00 = Don't know Physical = 00
   Data 01 & 02 = Major is 30 = 00 1E
   Data 03 & 04 = Don't Care = 00 00
   Data 05 = Digital BS TV = 07
   Total = **ma 00 00 00 1E 00 00 07**

* This feature is varied based on the model.

Ack [a][ ][Set ID][ ][OK][Data 00][Data 01]
[Data 02][Data 03][Data 04][Data 05]
[x][a][ ][Set ID][ ][NG][Data 00][x]

21. Channel(Programme) Add/Del(Skip)
    (Command: m b)

► To skip current channel(programme) for next time.

Transmission [m][b][ ][Set ID][ ][Data][Cr]

Data 00 : Del(ATSC,ISDB)/Skip(DVB) 01 : Add

Ack [b][ ][Set ID][ ][OK/NG][Data][x]

* Set the saved channel status to del(ATSC, ISDB)/ skip(DVB) or add.

22. Key (Command: m c)

► To send IR remote key code.

Transmission [m][c][ ][Set ID][ ][Data][Cr]

Data Key code - p.2.

Ack [c][ ][Set ID][ ][OK/NG][Data][x]

23. Control Backlight (Command: m g)

• For LCD TV / LED TV

► To control the backlight.

Transmission [m][g][ ][Set ID][ ][Data][Cr]

Data Min : 00 to Max : 64

Ack [g][ ][Set ID][ ][OK/NG][Data][x]

Control Panel Light (Command: m g)

• For Plasma TV

► To control the panel light.

Transmission [m][g][ ][Set ID][ ][Data][Cr]

Data Min : 00 to Max : 64

Ack [g][ ][Set ID][ ][OK/NG][Data][x]

24. Input select (Command: x b)
    (Main Picture Input)

► To select input source for main picture.

Transmission [x][b][ ][Set ID][ ][Data][Cr]

Data

00 : DTV	01 : CADTV
02 : Satellite DTV ISDB-BS (Japan)	10 : ATV
03 : ISDB-CS1 (Japan)	
04 : ISDB-CS2 (Japan)	
11 : CATV	
20 : AV or AV1	21 : AV2
40 : Component1	41 : Component2
60 : RGB	
90 : HDMI1	91 : HDMI2
92 : HDMI3	93 : HDMI4

Ack [b][ ][Set ID][ ][OK/NG][Data][x]

* This function depends on model and signal.

25. 3D(Command: x t) (only 3D models)
    (Depending on model)

► To change 3D mode for TV.

Transmission [x][t][ ][Set ID][ ][Data 00][ ][Data 01]
[ ][Data 02][ ][Data 03][Cr]

* (Depending on model)

Data Structure

[Data 00]	00 : 3D On
	01 : 3D Off
	02 : 3D to 2D
	03 : 2D to 3D
[Data 01]	00 : Top and Bottom
	01 : Side by Side
	02 : Check Board
	03 : Frame Sequential
	04 : Column interleaving
	05 : Row interleaving
[Data 02]	00 : Right to Left
	01 : Left to Right
[Data 03]	3D Effect(3D Depth): Min : 00 - Max : 14
	(*transmit by Hexadecimal code)

* [Data 02], [Data 03] functions depend on model and signal.
* If [Data 00] is 00 (3D On), [Data 03] has no meaning.
* If [Data 00] is 01 (3D off) or 02 (3D to 2D), [Data 01], [Data 02] and [Data 03] have no meaning.
* If [Data 00] is 03 (2D to 3D), [Data 01] and [Data 02] have no meaning.
* If [Data 00] is 00 (3D On) or 03 (2D to 3D), [Data 03] works when 3D Mode (Genre) is manual only.
* All 3D pattern options ([Data 01]) may not be available according to broadcasting/video signal.

[Data 00]	[Data 01]	[Data 02]	[Data 03]
00	O	O	O
01	X	X	X
02	X	X	X
03	X	O	O

X : don't care

Ack [t][ ][Set ID][ ][OK][Data00][Data01][Data02]
[Data03][x]
[t][ ][Set ID][ ][NG][Data00][x]

26. Extended 3D(Command: x v) (only 3D models) (Depending on model)

► To change 3D option for TV.

Transmission [x][v][ ][Set ID][ ][Data 00][ ]
[Data 01][Cr]

[Data 00] 3D option
00 : 3D Picture Correction
01 : 3D Depth (3D Mode is Manual Only)
02 : 3D Viewpoint
06 : 3D Color Correction
07 : 3D Sound Zooming
08 : Normal Image View
09 : 3D Mode (Genre)

[Data 01] It has own range for each 3D option determined by [Data 00].

1) When [Data 00] is 00
00 : Right to Left
01 : Left to Right

2) When [Data 00] is 01, 02
Data Min: 0 - Max: 14 (*transmit by Hexadecimal code)
Data value range(0 - 20) converts Viewpoint range (-10 - +10) automatically (Depending on model)
* This option works when 3D Mode (Genre) is manual only.

3) When [Data 00] is 06, 07
00 : Off
01 : On

4) When [Data 00] is 08
00 : Revert to 3D video from 3D-to-2D converted 2D video
01 : Change 3D video to 2D video, except 2D-to-3D video
* If conversion condition doesn't meet, command is treated as NG.

5) When [Data 00] is 09

00 : Standard
01 : Sport
02 : Cinema
03 : Extreme
04 : Manual
05 : Auto

Ack [v][ ][Set ID][ ][OK][Data00][Data01][x]
[v][ ][Set ID][ ][NG][Data00][x]

27. Auto Configure (Command: j u) (Depending on model)

► To adjust picture position and minimize image shaking automatically. It works only in RGB (PC) mode.

Transmission [j][u][ ][Set ID][ ][Data][Cr]

Data 01 : To set Auto Configure

Ack [u][ ][Set ID][ ][OK/NG][Data][x]

LG

Life's Good