OWNER'S MANUAL

WASHING MACHINE

Before beginning installation, read these instructions carefully. This will simplify installation and ensure that the product is installed correctly and safely. Leave these instructions near the product after installation for future reference.

ENGLISH

WT25PBVS6

MFL71981912
Rev.00_051723

www.lg.com

Copyright © 2023 LG Electronics Inc. All Rights Reserved.

TABLE OF CONTENTS

This manual may contain images or content that may be different from the model you purchased.

This manual is subject to revision by the manufacturer.

SAFETY INSTRUCTIONS

READ ALL INSTRUCTIONS BEFORE USE 3
WARNING 3

INSTALLATION

Parts and Specifications 8
Installation Place Requirements 10
Connecting the Water Inlet Hoses 11
Installing the Drain Hose 12
Levelling the Appliance 13

OPERATION

Operation Overview 14
Preparing the Wash Load 14
Adding Detergents, Softeners and Bleaches 16
Control Panel 18
Programme Table 21
Extra Options and Functions 28

SMART FUNCTIONS

LG ThinQ Application 31
Smart Diagnosis 33

MAINTENANCE

Cleaning after Every Wash 35
Cleaning the Appliance Periodically 35

TROUBLESHOOTING

Before Calling for Service 38

SAFETY INSTRUCTIONS

READ ALL INSTRUCTIONS BEFORE USE

The following safety guidelines are intended to prevent unforeseen risks or damage from unsafe or incorrect operation of the appliance.

The guidelines are separated into 'WARNING' and 'CAUTION' as described below.

Safety Messages

⚠	This symbol is displayed to indicate matters and operations that can cause risk. Read the part with this symbol carefully and follow the instructions in order to avoid risk.
⚠	**WARNING** This indicates that the failure to follow the instructions can cause serious injury or death.
⚠	**CAUTION** This indicates that the failure to follow the instructions can cause minor injury or damage to the product.

WARNING

⚠ WARNING

To reduce the risk of explosion, fire, death, electric shock, injury or scalding to persons when using this product, follow basic precautions, including the following:

Technical Safety

- This appliance is not intended for use by persons (including children) with reduced physical, sensory or mental capabilities, or lack of experience and knowledge, unless they have been given supervision or instruction concerning use of the appliance by a person responsible for their safety.

- Children should be supervised to ensure that they do not play with the appliance.
- Cleaning and user maintenance shall not be made by children without supervision.
- If the power cord is damaged, it must be replaced by the manufacturer, its service agent or similarly qualified persons in order to avoid a hazard.
- Ventilation openings must not be obstructed by a carpet.
- This appliance is intended to be used in household only.
- Use a new hose or hose-set supplied with the appliance. Reusing old hoses can cause a water leak and subsequent property damage.
- The inlet water pressure must be between 50 and 800 kPa.

Maximum Capacity

The maximum capacity in some cycles for dry clothes to be washed is **25 kg**.

Installation

- Never attempt to operate the appliance if it is damaged, malfunctioning, partially disassembled, or has missing or broken parts, including a damaged cord or plug.
- This appliance should only be transported by two or more people holding the appliance securely.
- Do not install the appliance in a damp and dusty place. Do not install or store the appliance in any outdoor area, or any area that is subject to weathering conditions such as direct sunlight, wind, rain, or temperatures below freezing.
- Make sure the power plug is completely pushed into the power outlet.
- Do not plug the appliance into multiple outlet sockets or an extension power cable.

- Do not modify the power plug provided with the appliance. If it does not fit the power outlet, have a proper outlet installed by a qualified electrician.
- This appliance must be grounded. In the event of malfunction or breakdown, grounding will reduce the risk of electric shock by providing a path of least resistance for electric current.
- This appliance is equipped with a power cord having an equipment-grounding conductor and a grounding power plug. The power plug must be plugged into an appropriate outlet socket that is installed and grounded in accordance with all local codes and ordinances.
- Improper connection of the equipment-grounding conductor can result in risk of electric shock. Check with a qualified electrician or service personnel if you are in doubt as to whether the appliance is properly grounded.
- Tighten and secure the drain hose at connecting ends to avoid separation.
- For models with only one inlet water supply valve, do not connect to hot water. Connect to cold water only.

Operation

- Do not apply any sharp objects to the control panel in order to operate the appliance.
- Do not attempt to separate any panels or disassemble the appliance.
- Do not repair or replace any part of the appliance. All repairs and servicing must be performed by qualified service personnel unless specifically recommended in this Owner's Manual. Use only authorized factory parts.
- Do not put animals, such as pets into the appliance.
- Keep the area underneath and around the appliance free of combustible materials such as lint, paper, rags, chemicals, etc.
- Do not leave the appliance door open. Children may hang on the door or crawl inside the appliance, causing damage or injury.
- Do not put in, wash or dry articles that have been cleaned in, washed in, soaked in, or spotted with combustible or explosive substances

(such as waxes, wax removers, oil, paint, gasoline, degreasers, drycleaning solvents, kerosene, petrol, spot removers, turpentine, vegetable oil, cooking oil, acetone, alcohol, etc.). Improper use can cause fire or explosion.

- Do not use or store flammable or combustible substances (ether, benzene, alcohol, chemical, LPG, combustible spray, insecticide, air freshener, cosmetics, etc.) near the appliance.
- Never reach into the appliance while it is operating. Wait until the drum has completely stopped.
- In case of a water leak from the appliance, disconnect the power plug and contact the LG Electronics customer information centre.
- Turn off water taps to relieve pressure on hoses and valves and to minimize leakage if a break or rupture should occur. Check the condition of the fill hoses; they may need replacement after 5 years.
- If there is a gas leakage (isobutane, propane, natural gas, etc.) within the home, do not touch the appliance or power plug and ventilate the area immediately.
- If the drain hose or inlet hose is frozen during winter, use it only after thawing.
- Keep all washing detergents, softener and bleach away from children.
- Do not touch the power plug or the appliance controls with wet hands.
- Do not bend the power cable excessively or place a heavy object on it.
- Do not put your hand, foot or anything under the appliance while the appliance is in operation.
- Avoid touching any water that is drained from the appliance during the wash.
- Make sure that drainage is working properly. If water is not drained properly, your floor may get flooded.
- If, during spinning, opening the door does not stop the drum within about 10 seconds, immediately discontinue operating the appliance and contact your dealer or LG Electronics service centre.

- Do not use a power outlet, wiring equipment and extension cord of which the electric capacity is lower than the appliance's rated capacity.
- When the air temperature is high and the water temperature is low, condensation may occur and thus wet the floor.
- Wipe off dirt or dust on the contacts of the power plug.

Maintenance

- Disconnect the appliance from the power supply before cleaning the appliance. Setting the controls to the OFF or stand by position does not disconnect this appliance from the power supply.
- Securely plug the power plug in the outlet socket after completely removing any moisture and dust.
- Do not spray water inside or outside the appliance to clean it.
- Never unplug the appliance by pulling on the power cable. Always grip the power plug firmly and pull straight out from the outlet socket.
- Only qualified service personnel from LG Electronics service centre should disassemble, repair, or modify the appliance. Contact an LG Electronics customer information centre if you move and install the appliance in a different location.

Disposal

- Before discarding an old appliance, unplug it. Cut off the cable directly behind the appliance to prevent misuse.
- Dispose of all packaging materials (such as plastic bags and styrofoam) away from children. The packaging materials can cause suffocation.
- Remove the door before disposing of or discarding this appliance to avoid the danger of children or small animals getting trapped inside.

INSTALLATION

Parts and Specifications

NOTE

- Appearance and specifications may change without notice to improve the quality of the appliance.

Front View

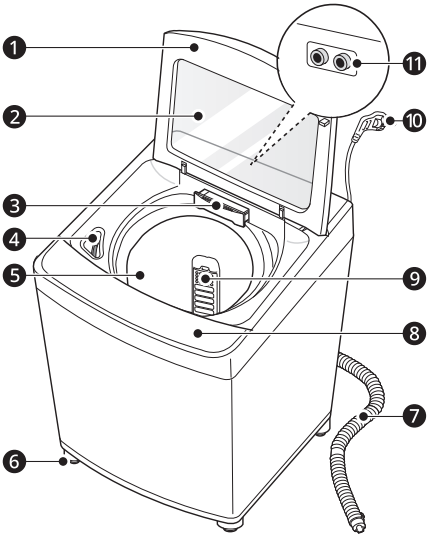

❶ Door

❷ Tempered Glass

❸ Dispenser Drawer

❹ Bleach Dispenser

❺ Drum

❻ Levelling Feet

❼ Drain Hose*1

❽ Control Panel

❾ Lint Filter*1

❿ Power Cord

⓫ Hot and Cold Water Inlets

*1 This feature is only available on some models.

Accessories

*1 The included accessories vary depending on the model you purchased.

*2 This accessory is not included in the product, but you can purchase it from the LG service centre.

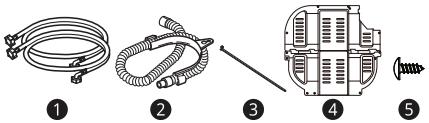

❶ Cold and Hot Water Inlet Hoses*1

❷ Drain Hose*1

❸ Tie Strap*1

❹ Anti-Rat Cover*2

❺ Screw for Anti-Rat Cover*2

Specifications

Model	WT25PBVS6
Power Supply	220 V~, 50 Hz
Product Weight	Approx. 59 kg

Model	Max.Capacity	Efficient Load*1	Efficient Programme	Water Level	Washing time
WT25PBVS6	25 kg	7.5 kg	**Normal** + Press and hold the **Water** button for 3 seconds.	4	17 minutes

*1 Load clothes into the tub to below the maximum guide line.

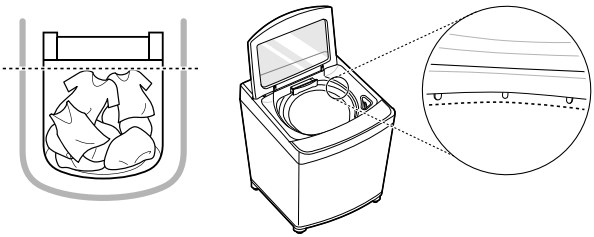

Dimension(mm)

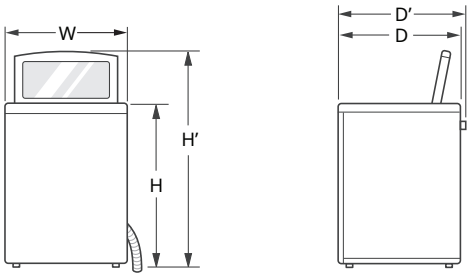

W	690	D	730	H	1070
D'	760	H'	1420		

Installation Place Requirements

Before installing the appliance, check the following information in order to install the appliance in a correct place.

Unpacking Shipping Material

1 Lift the appliance off of the foam base.

- After removing the carton and shipping material, lift the appliance off the foam base.
- Make sure the plastic tub support ❶ comes off with the base and is not stuck to the bottom of the appliance.
- If you must lay the appliance down to remove the carton base ❷, always protect the side of the appliance and lay it carefully on its side. Do not lay the appliance on its front or back.

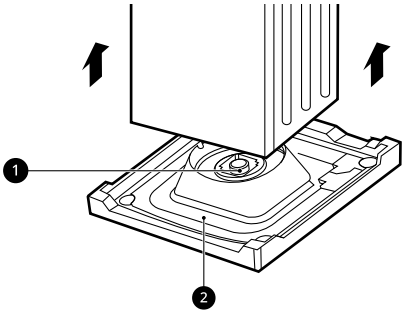

2 Remove the foam tub insert.

- To prevent damage, do not remove the foam insert ❸ from the tub until the appliance is in the final location.

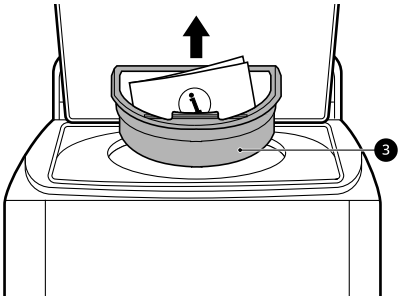

NOTE

- Once removed, save the foam insert for future use. If the appliance needs to be moved, the foam insert will help prevent damage during transportation.

3 Unfasten the power cord.

- Unfasten the power cord from the back of the appliance.

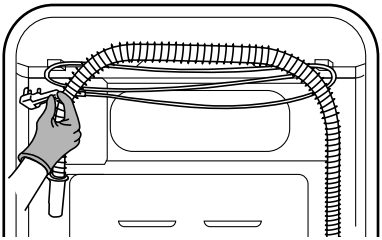

Installation Location

- Install the appliance on a flat floor of hard material that is strong enough to support a fully loaded appliance. (Allowable slope under the appliance: 1°)
- Never try to level any uneven floor by putting pieces of wood, cardboard or similar materials under the appliance.

- If it is impossible to avoid positioning the appliance next to a gas cooker or coal burning stove, an insulation (85 X 60 cm) covered with aluminium foil on the side facing the cooker or stove must be inserted between the two appliances.
- Ensure that when the appliance is installed, it is easily accessible for a service technician in the event of a breakdown.
- Additional clearance for the wall should have **10 cm** for the rear and **2 cm** for right and left side.

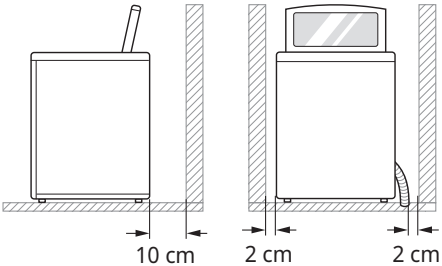

⚠ WARNING

- This appliance must only be used for domestic household purposes and should not be used with movable home or house.

NOTE

- Do not install this appliance on a raised surface or platform, plinth or stand. It may cause injury or serious malfunctioning.

Ventilation

- Make sure that air circulation around the appliance is not impeded by carpets, rugs, etc.

Ambient Temperature

- Do not install the appliance in rooms where freezing temperatures may occur. Frozen hoses may burst under pressure. The reliability of the electronic control unit may be impaired at temperatures below freezing point.
- If the appliance is delivered in winter and temperatures are below freezing, place the appliance at room temperature for a few hours before putting it into operation.

Electrical Connection

- Do not use an extension cord or double adapter.
- Always unplug the appliance and turn off the water supply after use.
- Connect the appliance to an earthed socket in accordance with current wiring regulations.
- The appliance must be positioned so that the plug is easily accessible.
- Power outlet must be within 1.5 meters of either side of the appliance.

⚠ WARNING

- Repairs to the appliance must only be carried out by qualified personnel. Repairs carried out by inexperienced persons may cause injury or serious malfunctioning. Contact your local authorised LG repairer.
- The power plug must be plugged into an appropriate outlet socket that is installed and grounded/earthed in accordance with all local codes and ordinances.

Connecting the Water Inlet Hoses

Before connecting the water inlet hose to the water tap, check the hose fitting type and follow the instructions for that hose fitting.

Note for Connection

- Water supply pressure must be between **50 kPa** and **800 kPa** (0.5 - 8.0 kgf / cm^2). If the water supply pressure is more than **800 kPa**, a pressure reducing device should be installed.
- Do not overtighten the water inlet hose when connecting it to the valve.
- Periodically check the condition of the hose and replace the hose if necessary.

- The water supply hose supplied may vary from country to country. Make sure to connect the blue supply hose to the COLD water tap, and the orange supply hose to the HOT water tap.

Checking the Rubber Seals

Two rubber seals ❶ are supplied with the water inlet hoses. They are used to prevent leaks when the connections to the taps are properly tightened. Do not over tighten connections.

- Do not use mechanical devices such as multi grips to tighten the inlet hoses. Ensure that the curved end of the water inlet hose is connected to the appliance.

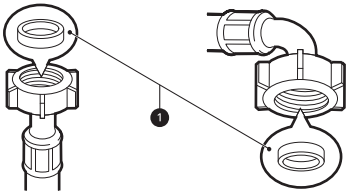

Connecting the Hose to the Water Tap

Connecting Screw-Type Hose to Tap with Thread
Screw the hose connector onto the water supply tap. Hand tighten only with the aid of a soft cloth.

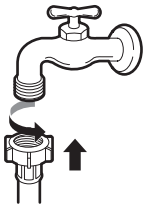

NOTE

- After connecting the water inlet hose to the water tap, turn on the water tap to flush out foreign substances (dirt, sand, sawdust, and etc.) in the water lines. Let the water drain into a bucket, and check the water temperature.

Connecting the Hose to the Appliance

Screw the water inlet hose to the water inlet valve on the back of the appliance.

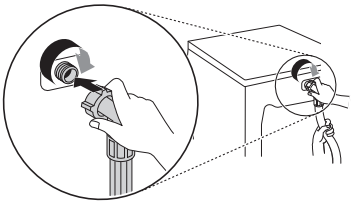

- On models with only one water inlet, do not connect the hose to the hot water supply. Connect to the cold water supply only.

NOTE

- After completing the connections, check for leaks and tighten or reassemble the connections if needed.

Installing the Drain Hose

Before connecting the drain hose, check your drain hose model and follow the instructions for that model.

For Models with Drain Pump

The discharge height should be approximately **90 - 120 cm** from the floor.

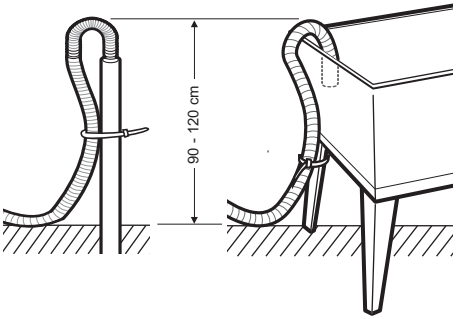

- Securing the drain hose correctly will protect the floor from damage due to water leakage.

- If the drain hose is too long, do not force the drain hose further into the drain outlet. This will cause abnormal noise.

NOTE

- The drain hose must not be placed higher than **120 cm** above the floor. Water in the appliance may not drain or may drain slowly.

Levelling the Appliance

Checking the Level

Levelling the appliance prevents unnecessary noise and vibration. Check whether the appliance is perfectly level after installation.

- If the appliance rocks when pushing the top plate of the appliance diagonally, adjust the feet again.

Adjusting and Levelling the Feet

When the appliance is not perfectly level, turn the adjustable feet until the appliance no longer wobbles.

- Turn the adjustable feet clockwise to raise or turn the adjustable feet counterclockwise to lower the appliance.

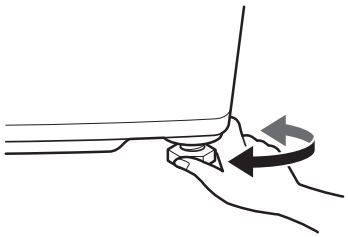

NOTE

- Do not insert pieces of wood etc. under the feet.
- Timber or suspended type flooring will contribute to excessive vibration and unbalance. Reinforcing or bracing the timber floor may be need to stop or reduce excessive noise and vibration.
- Do not install the appliance on any elevated surface or platform, as it may become unstable and cause serious injury and damage.
- If the appliance is installed on a uneven, weak or tilted floor causing excessive vibration, spin failure error can occur. It must be placed on a firm and level floor to prevent spin failure.

Assembling the Anti-Rat Cover

You can insert the anti-rat cover according to the type to protect the appliance from the rat.

Folding Type

1 Lay the appliance backwards.

⚠ CAUTION

- Be careful your feet or hands when you lay or raise the appliance.

2 Remove the sponge attached on the base.

3 Insert the 7 screws ❶ into the holes to assemble the anti-rat cover to the appliance.

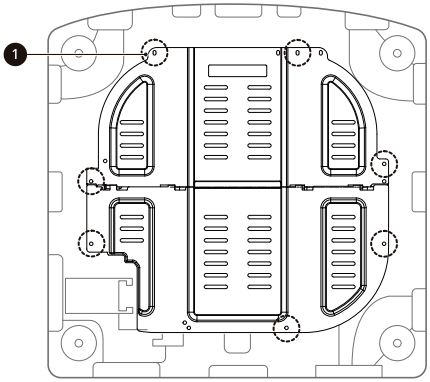

OPERATION

Operation Overview

Using the Appliance

Before the first wash, select the **Normal** programme and add a half amount of detergent. Start the appliance without clothes.

- This will remove residue and water from the drum that may have been left during manufacturing.

1 Sort clothes and load items.
   - Sort clothes by fabric type, soil level, colour and item size as needed. Open the door and load items into the appliance.

2 Add detergent, fabric softener and/or bleach.
   - Add the proper amount of detergent to the detergent dispenser drawer. If desired, add bleach or fabric softener to the appropriate areas of the dispenser.

3 Press the **POWER** button to turn on the appliance.

4 Press the **<**(**Left**) or **>**(**Right**) button to choose the desired wash cycle.
   - Select the option button to adjust water level, spin speed, etc. Refer to a fabric care label of your clothes for any warning or special instructions.

5 Begin cycle.
   - Press the **START/PAUSE** button to begin the cycle.
   - The appliance will agitate briefly without water to measure the weight of the clothes.
   - If the **START/PAUSE** button is not pressed within a certain time, the appliance will shut off and all settings will be lost.

6 End of cycle.
   - When the cycle is finished, a melody will sound. Immediately remove your clothing from the appliance to reduce wrinkling.

NOTE

- If the appliance is new or has been reset, an initial guide will appear on the display until 3 wash cycles have finished.

Preparing the Wash Load

Sort the wash load for best washing results, and then prepare the clothes according to the symbols on their care labels.

Sorting the Clothes

- For best washing results, sort your clothes according to a care label stating fabric type and washing temperature. Adjust the spin speed to wash them.
- Soil level (Heavy, Normal, Light): Separate clothes according to soil level. If possible, do not wash heavily soiled items with lightly soiled ones.
- Colour (White, Lights, Darks): Wash separately dark or dyed clothes from whites or light colours. Mixing dyed clothes with light clothes can result in dye transfer or discolouration of lighter clothes.
- Lint (Lint producers, Collectors): Wash separately lint producing fabrics from lint collecting fabrics. Lint producers can result in pilling and linting on the lint collectors.

Checking the Fabric Care Label

This will tell you about the fabric content of your clothes and how it should be washed.

Symbols on the Care Labels

Symbol	Wash / Fabric type
	• Normal Wash • Cotton, Mixed Fabrics
	• Easy Care • Synthetic, Mixed Fabrics
	• Special Delicate Wash • Delicates
	• Hand Wash Only • Wool, Silk
	• Do not wash

NOTE

- The dashes under the symbol give you information about the type of fabric and the maximum allowance of mechanical stress.

Checking the Laundry before Loading

- Combine large and small items in a load. Load large items first. Large items should not be more than half of total load.
- Do not wash single small items. Add 1 - 2 similar items to the load to prevent an out-of-balance load.
- Make sure to empty all pockets. Items such as hair clips, lighters, pens, coins and keys can cause irreparable damage to both your appliance and clothes.

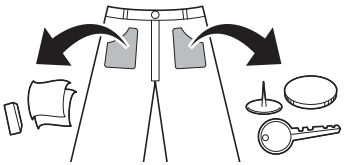

- Wash delicates (stockings, underwired bras) in a wash net.
- Close zippers, hooks and strings to make sure that these items do not snag other clothes.
- Pre-treat dirt and stains by saturating the dirt and stains with dissolved detergent and brushing them in order to remove dirt.

⚠ CAUTION

- Do not wash or spin any item labelled or known to be water-proof or water-resistant, even if the product care label on the item permits machine washing. Failure to follow these instructions could result in severe damage to your washing load, your appliance and/or property damage as a result of abnormal load friction or vibration of the appliance.
  - Examples of water-proof or water-resistant items include certain mattress pads, mattress covers, rain gear, camping gear, skiing apparel, outdoor gear and similar items.

Adding Detergents, Softeners and Bleaches

Detergent Dosage

- Detergent should be selected according to fabric type, colour, soil level and washing temperature and should be used according to the detergent manufacturer's instructions.
- Too much detergent results in excessive suds which cause poor washing.
- When you use liquid detergent, follow the guidelines provided by the detergent manufacturer.
- You can pour liquid detergent directly into the main detergent drawer if you are starting the wash cycle immediately. It is also recommended that it be added into the drum when loading the clothes.
- Do not use liquid detergent if you are using delay or pre-wash function as the liquid may harden.
- Reduce the amount of detergent if too many suds are formed.
- Detergent usage may need to be adjusted for water temperature, water hardness, size and soil level of the laundry. For best results, avoid oversudsing.
- Refer to the label of the clothes, before choosing the detergent and water temperature.
- Use only suitable detergents for the respective type of clothing:
  - General powdered detergents for all types of fabric
  - Powdered detergents for delicate fabric
  - Liquid detergents for all types of fabric or designated detergents only for wool
- For better washing performance and whitening, use detergent that contains general powdered bleach.
- Detergent is dispensed from the dispenser at the beginning of the cycle.
- Dilute liquid detergent with water, pour into the drum and start the cycle.

⚠ CAUTION

- Using liquid detergent without diluting, or leaving laundry for a long time after pouring diluted liquid detergent into the drum might cause the clothes to be damaged, bleached, discoloured.

NOTE

- Do not let the detergent harden. Doing so may lead to blockages, poor rinse performance or odour.
- Full load: According to manufacturer's recommendation.
- Part load: 3/4 of the normal amount
- Minimum load: 1/2 of full load

Adding Detergents

- Add the measured amount of detergent into the detergent compartment ❶.

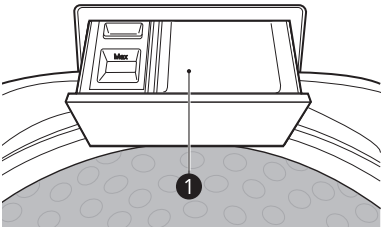

- Use more detergent if you have hard water, large items, greasy or oily soils or lower water temperature.
- Soap flakes or granulated soap powders should not be used in the appliance. When washing woollens, remember to use detergent suitable for washing woollens.

NOTE

- Use the appropriate amount of detergent. Too much detergent, bleach or softener may cause an overflow or a malfunction.

Adding Fabric Softeners

Add a fabric softener to the maximum fill line.

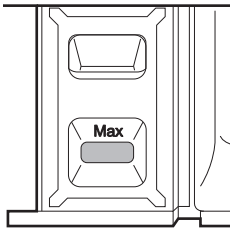

- If the softener is concentrated, then it should be diluted.
- Close the dispenser drawer gently.
- Do not leave the fabric softener in the detergent drawer for more than 2 days. Fabric softener may harden.
- Softener will automatically be added during the last rinse of the cycle.
- Do not open the drawer when water is being supplied.

NOTE

- Use only liquid softener and do not mix softener and detergent.
- Pouring excessive fabric softener over the maximum fill line can cause it to dispense too early, which may stain clothes.
- Do not pour fabric softener directly onto the laundry, doing so will cause staining on the clothes that will be difficult to remove.
- Solvents (benzene, etc.) must never be used.

Adding Liquid Bleaches

- Before starting the appliance, pour the measured amount of bleach directly into the bleach dispenser ❶. Avoid splashing or overfilling.

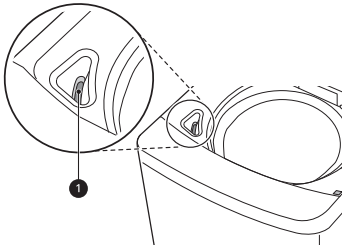

- Mix powdered bleach with water to a liquid consistency and pour it into the bleach dispenser.
- Check clothing care label for special instructions and separate the laundry to be bleached.
- Dilute liquid chlorine bleach with water.
- Measure the recommended amount of liquid bleach carefully according to instructions on the bottle.

⚠ CAUTION

- Never pour undiluted liquid bleach directly onto laundry or into the wash basket. This may cause change of colour or damage to the laundry.
- Do not pour powdered bleach into the bleach dispenser. Powdered bleach may harden, so it will block the bleach dispenser.

Control Panel

Control Panel Features

For Steam Models

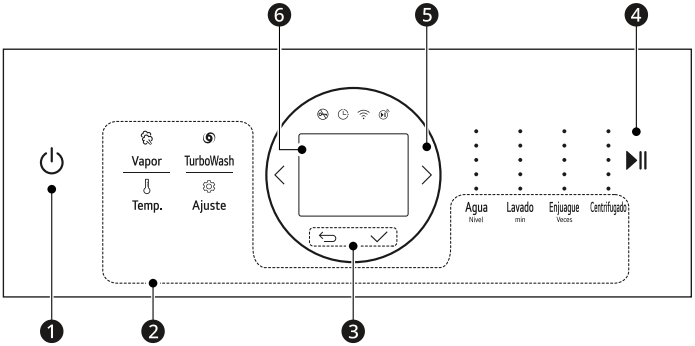

For Non-Steam Models

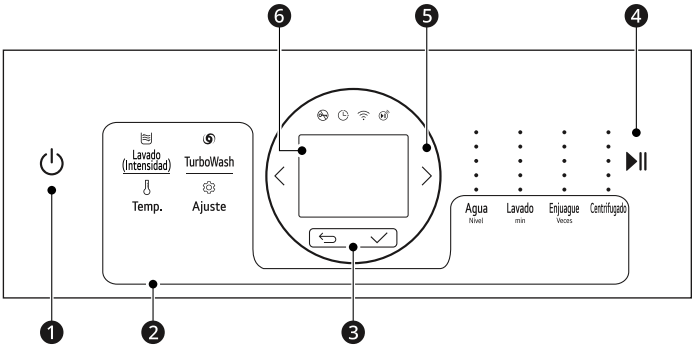

❶ **POWER Button**

- Press the **POWER** button to turn on or off the appliance.
- The appliance automatically turns off once a certain time has passed after the wash has completed.

❷ **Extra Options and Functions**

- To use an extra option and function, press the button.

❸ **↺(Previous) & ✓(OK) button**

- Press the ↺(**Previous**) button to go to the previous screen.
- Press the ✓(**OK**) button to select a menu item or save the information.

❹ **START/PAUSE Button**

- Press this button for 1 second to start or pause the washing programme.

NOTE

- If the **START/PAUSE** button is not pressed within a certain time, the appliance will shut off and all settings will be lost.
- For customer safety, the door will be locked automatically during operation. If there is additional laundry to put in, press **START/PAUSE** to unlock.
- If there is a power blackout during operation, the washing machine door will not open. After the electricity supply is on, press the **POWER** and **START/PAUSE** buttons to open the door.

❺ Selector button

- Press the **<**(**Left**) or **>**(**Right**) button to choose the desired washing programme or option.
- Once the desired washing programme has been selected, the standard presets will appear in the display. These settings can be adjusted using the extra options and functions button at any time before starting the washing programme.

❻ Status Display

- This LCD shows the settings, estimated time remaining, options, and status messages.

Time and Status Display

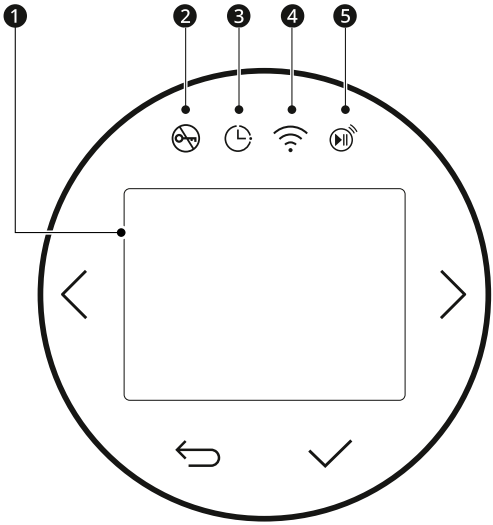

❶ Status Display

- The display shows the washing programme, settings, estimated time remaining, options, and status messages.

❷ Door Lock Indicator

- This indicator lights up when the cycle starts and the door is locked.
- The indicator light stays on until the cycle is paused, stopped or has finished.

❸ Delay End Indicator

- This indicator lights up when the **Delay End** feature is activated.

❹ **Wi-Fi Indicator**

- This indicator lights up when the product is connected to a home Wi-Fi network.

❺ **Remote Start Indicator**

- This indicator lights up when the **Remote Start** feature is activated.

Programme Table

Washing Programme

Wash programmes are designed for the best wash performance for different types of clothes.

- Press the <(**Left**) or >(**Right**) button to select the desired programme.

Default Washing Programme

These programmes are in the initial cycle list.

Normal	
Description	Use this programme to wash normal laundry. The built-in sensor detects the weight of the laundry, calculating wash, rinse and, spin settings accordingly. • If water or wet laundry is already in the drum before the start, the water level will be increased. • For lightweight and bulky items, the water level may be too low. Increase the water level manually.

AI Wash	
Description	**AI Wash** provides the appropriate drum rotation actions after load sensing is completed. It washes softly for waterproof fabrics, and strongly for water permeable fabrics. • This programme's recommended laundry amount is under **5 kg**. **NOTE** • For best wash results, load the dry clothes for this programme.

Duvet	
Description	Use this programme to wash a blanket or bedclothes that have the hand wash sign on the care label. • Cashmere bedclothes, acrylic blanket, mixed spinning blanket, woollen blanket, infilling (polyester 101), and bed sheets might be damaged if they are allowed to float. It is recommended to purchase a separate laundry net to wash. • Separate bed clothes from general clothes. It might cause laundry to be unbalanced, which results in abnormal washing. • Spin dry might take longer to redistribute the laundry evenly if bedclothes are lumped to a side. • Never wash an electric blanket, carpets, rugs, pet accessories, soft toys or shoes. It can cause damage to the appliance and other items in the wash. • Put bedclothes into a laundry net and then soak and sink them in water so that they are less likely to float. If the items float during the wash or spin, it may damage the appliance and the clothes. • Regardless of size, we recommend washing bedclothes individually. If two bedclothes with different materials are washed at the same time, it might cause a spin malfunction due to imbalance. **⚠ CAUTION** • When putting a blanket into the drum, do not load it over the maximum line ❶. The blanket must also be submerged in the water. Failure to do so or overloading the blanket in the appliance will result in damage to the wash load and the appliance. 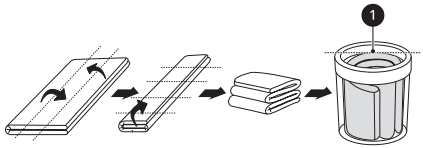

Pre Wash+Normal	
Description	Use this programme to pretreat immediate stain without handwash. • It is necessary for clothes which could smell bad if they are not washed promptly.

Smart Rinse	
Description	Use this programme to improve rinsing results. This is suitable for underwear and baby clothes. If you have sensitive skin or skin trouble, use this programme.

Quick Wash	
Description	Use this programme to wash lightly soiled clothes for a short time.

Delicates	
Description	Use this programme to wash delicate fabrics such as lingerie and woolens. Before washing, check the care label for the washing instructions. • This programme uses a slow spin to extract water from laundry, so the laundry has more moisture than normal. **NOTE** • Hang or lay flat to dry your delicates. • Only cold water will be used for this programme as hot water may damage laundry.

Stain Care (for Steam Models Only)	
Description	Use this programme to remove stains efficiently. Water will be heated up to about 40 ℃ under this programme for the best washing result. • This programme uses more warm water than other programmes as it has higher set temperature for heating. • Stains that can be easily removed with this programme are coffee, soda, juice, soy sauce etc. • If only cold water is connected, it takes longer washing time as heating time lengthens. **NOTE** • Due to higher water temperatures used, this programme is not recommended for wool, silk, leather, or any other delicates or temperature sensitive items. • While heating, water drops might be created at the door glass due to humidity differences. This is normal. Wipe the door glass after the wash cycle is completed. • Be careful as the exterior of the appliance is hot by heating. • This programme's recommended amount of clothes is under **6 kg**.

Allergy Care (for Steam Models Only)	
Description	This programme is specifically designed for reducing certain allergens at a powerful, high temperature.

Rinse+Spin	
Description	Use this programme to rinse and spin laundry separately from a regular programme. • This can be helpful in preventing fresh stainsfrom setting in fabrics. **⚠ CAUTION** • When you select this option, do not add the fabric softener into the softener dispenser. It may cause stain clothes.

Spin Only	
Description	Use this programme to drain and spin laundry without washing or rinsing it.

Tub Clean	
Description	This is a special function to clean inside the drum of your appliance. • To use this function, refer to the **MAINTENANCE** for details.

Non-Default Washing Programme

Edit the list of programme using the **Programme List Edit** option to use these cycles.

Towels	
Description	Use this programme to wash bath towels, bathrobes, hand towels etc. • Wash separately from other clothes.

Sportswear	
Description	Use this programme to wash special garments like sports and outdoor wear. • Use for water-repellent fabric laminate used on clothing.

School Care	
Description	Use this programme to wash school uniform. • This programme has a longer washing time than the **Normal** programme. • To reduce noise in spinning, this programme uses a slow spin to prevent the clothes from being damaged, so the laundry has more moisture than normal.

Strong Wash	
Description	Use this programme to wash withstrong wave motion.

Color Care	
Description	Use this programme to keep colors from fading.

Silent Wash	
Description	Use this programme to wash clothes quietly especially during late night and dawn. • To reduce noise in spinning, this programme uses a slow spin to prevent the clothes from being damaged, so the clothes has more moisture than normal.

Babywear (for Steam Models Only)	
Description	Use this programme to wash baby clothes with gentle motion and better performance.

Rainy Wash	
Description	Use this programme to spin strongly after washing.

Single Item	
Description	Use this programme to wash quickly light soil.

Full Items	
Description	Use this programme to wash and spin strongly.

Sweat Stains	
Description	Use this programme to remove light stain swith prewash.

Jeans	
Description	Use this programme to prevent jeansfrom discolouring.

Wash Only	
Description	Use this programme to wash only, no rinsing and spinning.

Rinse Only	
Description	Use this programme to rinse only, no washing and spinning.

Quick Tub Clean	
Description	This programme helps to reduce detergent residues without heater.

Extra Options

*1 This option is automatically included in the washing programme and cannot be deselected.

NOTE

- **Steam** option can be selected for steam models only.
- **Delay End** option can be selected for every washing programme in the table below except the **Delicates** programme.
- **TurboWash** option can be selected for the **Normal** and **AI Wash** programmes.
- All extra options cannot be selected at the same time in the **Normal** programme.
- ●: Available / X: Not available

For Default Washing Programme

Programme	Steam	Wash Wave	Temperature	Scent+
Normal	●	●	●	●
AI Wash	X	●	●	●
Duvet	X	●	●	X
Pre Wash+Normal	X	●	●	●
Smart Rinse	●	●	●	●
Quick Wash	X	●	●	X
Delicates	X	X	X	X
Stain Care	●	●	●	●
Allergy Care	●*1	X	●	●
Rinse+Spin	X	●	X	●
Spin Only	X	X	X	X
Tub Clean	X	X	●	X

For Non-Default Washing Programme

Programme	Steam	Wash Wave	Temperature	Scent+
Towels	X	●	●	●
Sportswear	X	●	●	●

Programme	Steam	Wash Wave	Temperature	Scent+
School Care	X	●	●	●
Strong Wash	X	●	●	●
Color Care	X	●	●	●
Silent Wash	X	●	●	X
Babywear	●*1	X	●	●
Rainy Wash	●	●	●	●
Single Item	X	●	●	X
Full Items	●	●	●	●
Sweat Stains	●	●	●	●
Jeans	X	●	●	●
Wash Only	X	●	●	X
Rinse Only	X	●	X	X
Quick Tub Clean	X	X	X	X

Extra Options and Functions

You can use the extra options and functions on some programmes to customize the cycle.

Customising a Washing Programme

Each programme has default settings that are selected automatically. You may also customise these settings using these buttons.

Water
This appliance detects the amount of laundry automatically, then sets the water level. However, manually increasing the water level may be required and recommended to avoid linting and unbalanced errors when the load is bulky but lightweight.

- Press **Water** option until the desired water level is selected. The water level is indicated on the display.
- When water level is automatically detected, it may differ depending on the amount of laundry even though the same water level is indicated on the control panel.

Wash
Adjusting the wash time setting modifies the cycle times and/or wash actions.

- Press **Wash** button until the desired wash time is selected. The wash time is indicated on the display.

Rinse
Use this option to change the number of rinses.

- Press **Rinse** button to change the number of rinses. The number of rinses is indicated on the display.

Spin
Use this option to change the spin level.

- Press **Spin** button until the desired spin level is selected. The spin level is indicated on the display.
- When you press the **START/PAUSE** button after selecting this option, the remaining time is indicated on the display.

Using Basic Options

You can customize the programmes by using the following basic options:

Steam (For Steam Models Only)
Adding this option helps provide better cleaning results.

WashWave (For Non-Steam Models)
Use this option to select the wash strength.

TurboWash
Adding this option reduces the programme time but the similar washing results will be provided.

NOTE

- If the water pressure of tap water is less than 100 kPa, water does not come out from the **JetSpray** nozzle on the top of the drum, but water comes out from the detergent drawer.

Temperature
Use this option to change water temperature.

Follow the next steps to use a special option.

1. Press the **POWER** button.
2. Select a washing programme.
3. To use special options,
   - **Steam**: Press the **Steam** button.
   - **WashWave**: Press the **WashWave** button.
   - **TurboWash**: Press the **TurboWash** button.
   - **Temperature**: Press the **Temperature** button.
4. Press the **START/PAUSE** button.

Setting

1 Press the **Setting** button.

2 Press the <(**Left**) or >(**Right**) button to select the desired option and press the ✓(**OK**) button.

3 Press the <(**Left**) or >(**Right**) button to select or change the option and press the ✓(**OK**) button to save the option.

4 To return to the previous screen, press the **Setting** button again or press the ↺(**Previous**) button.

NOTE

- If no action is taken for several minutes after pressing the **Setting** button, the display reverts to the previous screen.

Remote Start
Use a smartphone to control your washer remotely.

- For more information, see **SMART FUNCTIONS** in this manual.

Wash Wave (for Steam Models)
Use this option to select the wash strength.

Delay End
Use this option to delay ending time.

- The appliance will start automatically and finish after a specified time interval.

NOTE

- This function is the time to the end of the programme, not the start. The actual running time may vary due to water temperature, wash laundry and other factors.
- Reservation can be made up to 19 hours;
  - 30 minutes interval up to 3 - 19 hours
- This function cannot be set for less than 3 hours.

Soak
This option can be selected to wash heavily soiled clothes by soaking them in water for some time to loosen dirt and grime.

- This function can be set from between 30 to 180 minutes.

Scent+
Use when you want to leave a strong fragrance of the softener on the fabric.

Child Lock
Use this option to disable the controls. This function can prevent children from changing cycles or operating this washer.

NOTE

- The function does not lock the door.
- Once this function is set, all buttons are locked except the **Power** and **Setting** button.
- When the controls are locked, a message noticing the **Child Lock** appears on the status display.
- Turning off the power will not reset this function. You must deactivate this function before you can access any other options and functions.

Programme List Edit
Edit the list of washing programme as desired.

1) Press the <(**Left**) or >(**Right**) button to select the desired washing programmes and press the ✓(**OK**) button to include or exclude washing programmes.
   - If a washing programme is added, a check mark is displayed by that washing programme.
   - If a washing programme is deleted, the check mark is not displayed by that washing programme.
2) Press the ↺(**Previous**) button to save the washing programme list.

NOTE

- The **Normal** and **Tub Clean** programmes cannot be deleted.

NOTE

- The order of washing programme in the list can be changed. Change the order of the washing programmes in the list using **Other Settings** > **Auto Arrange Programmes** on the product.

Other Settings

1 Press the **Setting** button.

2 Press the <(**Left**) or >(**Right**) button to select **Other Settings** and press the ✓(**OK**) button.

3 Press the <(**Left**) or >(**Right**) button to select the desired setting and press the ✓(**OK**) button.

4 Press the <(**Left**) or >(**Right**) button to select or change the setting and press the ✓(**OK**) button to save the setting.

5 To return to the previous screen, press the **Setting** button again or press the ↺(**Previous**) button.

NOTE

- If no action is taken for several minutes after pressing the **Setting** button, the display reverts to the previous screen.

Wi-Fi Connection
Use to set up the Wi-Fi connection. When Wi-Fi is turned on, the Wi-Fi icon appears in the display.

Auto Arrange Programmes
When activated, this feature organizes the programme list and options automatically based on your usage patterns.

- **On** is the default setting.
- Selecting **Off** retains the current list order.

Buzzer
The volume of the notification sounds and button sounds can be set from quiet to very loud.

Smart Diagnosis
Use this to help troubleshoot errors or malfunctions.

- See the Smart Diagnosis section for more details.

Language
Use this to change the language of the appliance

Reset Setting
Select this to delete all the stored data and initialize settings.

SMART FUNCTIONS

LG ThinQ Application

The **LG ThinQ** application allows you to communicate with the appliance using a smartphone.

LG ThinQ Application Features

Communicate with the appliance from a smartphone using the convenient smart features.

Remote Start
It allows you to control the appliance remotely from the **LG ThinQ** application.

Downloaded
You can download new and special cycles that are not included in the basic cycles on the appliance.

A variety of specialty cycles specific to the appliance can be downloaded to the successfully registered appliances.

Once cycle download is completed in the appliance, the appliance keeps the downloaded cycle until a new cycle is downloaded.

NOTE

- Only one downloaded cycle can be stored on the appliance at a time.

Tub Clean Coach
This function shows how many cycles remain before running the **Tub Clean** function.

Energy Monitoring
This function checks the energy consumption of the recently used cycles and monthly average.

Smart Diagnosis
This function provides useful information for diagnosing and solving issues with the appliance based on the pattern of use.

Settings
Allows you to set various options on the appliance and in the application.

Push Alert
When the cycle is complete or the appliance has problems, you have the option of receiving push notifications on a smartphone. The notifications are triggered even if the **LG ThinQ** application is off.

NOTE

- If you change your wireless router, Internet service provider, or password, delete the registered appliance from the **LG ThinQ** application and register it again.
- The application is subject to change for appliance improvement purposes without notice to users.
- Functions may vary by model.

Installing LG ThinQ App and Connecting an LG Appliance

Models with QR Code

Scan the QR code attached to the product using the camera or a QR code reader app on your smartphone.

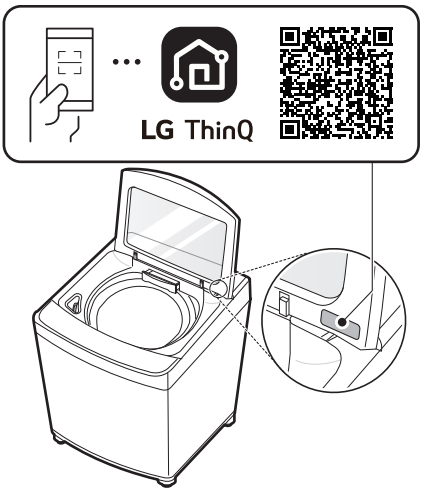

Models without QR Code

1 Search for and install the **LG ThinQ** app from the Google Play Store or Apple App Store on a smartphone.

2 Run the **LG ThinQ** app and sign in with your existing account or create an LG account to sign in.

3 Touch the add (+) button on the **LG ThinQ** app to connect your LG appliance. Follow the instructions in the app to complete the process.

NOTE

- You may be asked to provide a password to connect to the LG network (not your home network) during the Wi-Fi setup. The password is the last 4 characters of the network name, repeated twice, with no spaces. For example, if the network name appears as LG_XXXX_8b92, then you would enter 8b928b92 as your password. The password is case sensitive and the last 4 characters are unique to your appliance.
- To verify the Wi-Fi connection, check that the icon on the control panel is lit.
- The appliance supports 2.4 GHz Wi-Fi networks only. To check your network frequency, contact your Internet service provider or refer to your wireless router manual.
- **LG ThinQ** is not responsible for any network connection problems or any faults, malfunctions, or errors caused by network connection.
- If the appliance is having trouble connecting to the Wi-Fi network, it may be too far from the router. Purchase a Wi-Fi repeater (range extender) to improve the Wi-Fi signal strength.
- The Wi-Fi connection may not connect or may be interrupted because of the home network environment.
- The network connection may not work properly depending on the Internet service provider.
- The surrounding wireless environment can make the wireless network service run slowly.
- If the appliance cannot be registered due to problems with the wireless signal transmission, unplug the appliance and wait about a minute before trying again.
- If the firewall on your wireless router is enabled, disable the firewall or add an exception to it.
- The wireless network name (SSID) should be a combination of English letters and numbers. (Do not use special characters.)
- Smartphone user interface (UI) may vary depending on the mobile operating system (OS) and the manufacturer.
- If the security protocol of the router is set to **WEP**, network setup may fail. Change the security protocol (**WPA2** is recommended) and connect the product again.

Using the Appliance Remotely

Remote Start

To start the washing programme remotely in the **LG ThinQ** application, set the **Remote Start** function. You can also monitor your cycle operation so you know how much time is left in the cycle.

Using this function

1 Put the clothes into the drum and add detergent into the detergent dispenser drawer.
- If desired, add bleach or fabric softener to the appropriate areas of the dispenser.

2 Press the **POWER** button.

3 Press the **Setting** button, press the <(**Left**) or >(**Right**) button to select **Remote Start** and press the ✓(**OK**) button.

4 Press the <(**Left**) or >(**Right**) button to select **On** and press the ✓(**OK**) button to enable the remote control function.

5 Start a cycle from the **LG ThinQ** application on your smartphone.

NOTE

- Once this function is enabled, you can start a cycle from either the **LG ThinQ** smartphone application or the product. If the cycle is not started, the appliance will wait to start the cycle until it is turned off remotely from the application or this function is disabled.
- If the door has been opened, you can not start a cycle remotely.

Disable this function manually

When this function is activated, press the **Setting** button, press the <(**Left**) or >(**Right**) button to select **Remote Start** and press the ✓(**OK**) button. Press the <(**Left**) or >(**Right**) button to select **Off** and press the ✓(**OK**) button.

Open Source Software Notice Information

To obtain the source code that is contained in this product, under GPL, LGPL, MPL, and other open source licenses that have the obligation to disclose source code, and to access all referred license terms, copyright notices and other relevant documents, please visit https://opensource.lge.com.

LG Electronics will also provide open source code to you on CD-ROM for a charge covering the cost of performing such distribution (such as the cost of media, shipping, and handling) upon email request to opensource@lge.com.

This offer is valid to anyone in receipt of this information for a period of three years after our last shipment of this product.

Smart Diagnosis

Use this feature to help you diagnose and solve problems with your appliance.

NOTE

- The feature may be subject to change without prior notice and may have a different form depending on where you are located.

Using LG ThinQ to Diagnose Issues

If you experience a problem with your Wi-Fi equipped appliance, it can transmit troubleshooting data to a smartphone using the **LG ThinQ** application.

- Launch the **LG ThinQ** application and select the **Smart Diagnosis** feature in the menu. Follow the instructions provided in the **LG ThinQ** application.

NOTE

- For reasons not attributable to LGE's negligence, the service may not operate due to external factors such as, but not limited to, Wi-Fi unavailability, Wi-Fi disconnection, local app store policy, or app unavailability.

Using Audible Diagnosis to Diagnose Issues

Follow the instructions below to use the audible diagnosis method.

- Launch the **LG ThinQ** application and select the **Smart Diagnosis** feature in the menu. Follow the instructions for audible diagnosis provided in the **LG ThinQ** application.

1 Press the **POWER** button to turn on the appliance.

2 Press the **Setting** button.

3 Press the <(**Left**) or >(**Right**) button to select **Other Settings** and press the ✓(**OK**) button.

4 Press the <(**Left**) or >(**Right**) button to select **Smart Diagnosis** and press the ✓(**OK**) button.

5 Place the mouthpiece of your smartphone close to the **POWER** button and press the ✓(**OK**) button.

- Hold the smartphone mouthpiece to the **POWER** button until the data transfer is complete.

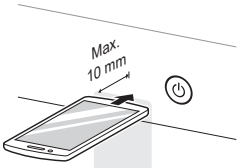

6 After the data transfer is complete, the washing machine will turn off.

NOTE

- For best results, do not move the smartphone while the tones are being transmitted.

MAINTENANCE

⚠ WARNING

- Unplug the appliance before cleaning to avoid the risk of electric shock. Failure to follow this warning may result in serious injury, fire, electric shock, or death.
- Never use harsh chemicals, abrasive cleaners, or solvents to clean the appliance. They may damage the finish.

Cleaning after Every Wash

What to Clean

- If you always use cold water, we recommend that a warm or hot wash be used at regular intervals e.g. every 5th wash should be at least a warm one.
- Turn off taps after use to prevent the chance of flooding, otherwise an inlet hose may burst.
- Always unplug the power cord after use.
- After the cycle is finished, wipe the door and the inside of the door to remove any moisture.
- Clean around the bleach dispenser with water to flush any residual bleach from the dispenser opening as bleach can be corrosive if left undiluted.

⚠ WARNING

- Leave the door open to dry the drum interior but only if it is safe and any children are supervised.

Cleaning the Exterior

Proper care of the appliance can extend the service life.

Exterior

- Immediately wipe off any spills.
- Wipe with a damp cloth.
- Do not press on the surface or the display with sharp objects.

Dispenser Drawer

Detergent or fabric softener may build up in the dispenser drawer. Remove the drawer and inserts from the dispenser drawer and clean any buildup once or twice a month.

Cleaning the Appliance Periodically

Tub Clean

This is a special function to help clean the inside of the appliance by soaking, washing, rinsing and spinning.

Run this function **once a month** (or more often if needed) to reduce build-up of detergent and softener and other residue.

- If there is a bad smell or mildew inside the appliance, run this function once a week for 3 weeks in addition to the regularly prompted intervals.

NOTE

- The **Time to clean the tub** message will be displayed to alert to the recommendation of operating the **Tub Clean** function.
- If the**Time to clean the tub** message is displayed on the appliance, or if it is selected after the completion of 30 wash cycles, the running time will increase up to 6 hours due to added soaking time (1 - 5 hours).
- For models with a lint filter, remove lint or dirt from the inside of the lint filter before and after using this programme.

NOTE

- For models without a lint filter, the lint is discharged when the water drains during washing.

1 Remove any clothing or items from the appliance.

2 Open the dispenser drawer and add anti-limescale to the main wash compartment.

⚠ WARNING

- Do not add any detergent to the detergent dispenser drawer for this function. Doing so may generate excessive suds and leak out from the appliance and cause damage to property.

3 Close the dispenser drawer slowly and close the door.

4 Press the **POWER** button.

5 Press the **<**(**Left**) or **>**(**Right**) button to select **Tub Clean**.

6 Press the **START/PAUSE** button to start.

7 Leave the door open to dry the inside of the appliance completely.
   - When the inside of the appliance is not dried completely, it may cause a bad smell or mildew.

⚠ WARNING

- Leave the door open to dry the drum interior but only if it is safe and any children are supervised.

Cleaning the Water Inlet Filter

Water inlet filter collects lime or any small objects that may be in water supplied to the appliance. Clean the water inlet filter regularly.

- Turn off the water taps to the appliance if the appliance is to be left for any length of time (e.g. holiday), especially if there is no floor drain (gully) in the immediate vicinity.
- Water supply error message will be displayed on the control panel when water is not entering the detergent drawer.
- If the water is very hard or contains traces of limescale, the filter on the water inlet may be clogged.

1 Turn off the power and the water tap and then unscrew the water inlet hose.

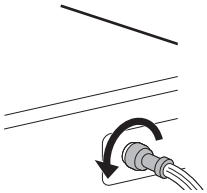

2 Remove the water inlet filter with small pliers and then clean the filter using a medium bristle tooth brush.

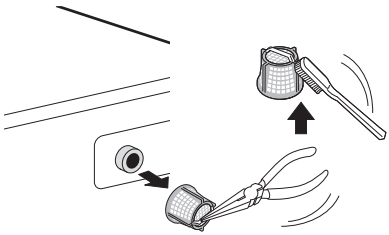

Cleaning the Lint Filter

The filter is an important part for an efficient washing performance result, so take a special care. Clean the filter regularly.

⚠ CAUTION

- Clean the lint filter after at least 2 - 3 washes.
- Do not drop the filter on the floor.

- Be careful not to get your fingernails caught in the filter when you handle the filter.
- The lint filter should be back into its original position after being washed to avoid damage to your laundry items. Do not operate the appliance with the lint filters removed.
- If the mesh hole of the lint filter is clogged, foreign objects in the laundry may not be filtered.
- Do not leave iron objects (such as clothes pins, hairpins, etc.) in the lint filter as they promote rust.

1 Push down on the release tab on the top of the filter cover and pull forward.

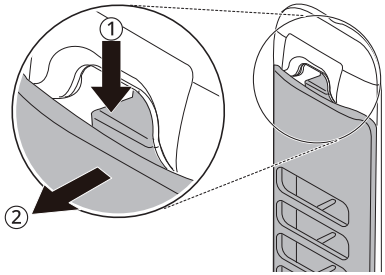

2 Open the lid and remove the lint.

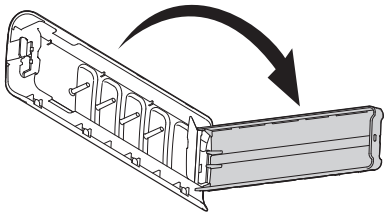

3 Wash the filter with a soft brush.

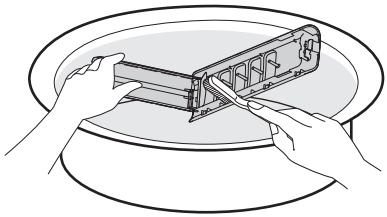

4 Close the lid and then insert the lower part of the filter into the wash drum. Press the top of the filter until you hear a **click sound**.

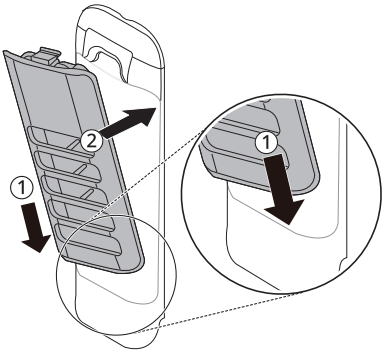

TROUBLESHOOTING

Before Calling for Service

Operation of the appliance can lead to errors and malfunctions. The following tables contain possible causes and notes for resolving an error message or malfunction. You can remedy most of the problems by yourself, consequently save time and money, since you do not need to call LG Electronics service centre. The following table should assist you by troubleshooting.

Error Messages

The appliance is equipped with an automatic error-monitoring system to detect and diagnose problems at an early stage. If this appliance does not function properly or does not function at all, check the following before you call LG Electronics service centre.

Symptoms	Possible Cause & Solution
Door Open Error	**The door is not closed properly.** • Close the door completely. If the error code is still displayed, call for service.
	The door is opened while the washing machine is operating. • Press **Start/Pause** to cancel the door error. Press **Start/Pause** again to start the washing programme.
Door Lock Error	**Door is not locked properly.** • Check nothing is caught under the door, including shipping materials or clothing. • Close the door completely. If the error code is still displayed, call for service.
Water Supply Error	**Water supply tap(s) are not completely open.** • Fully open tap.
	Water supply hose(s) are kinked, pinched, or crushed. • Straighten or reinstall the water supply hose(s).
	The filter of the supply hose(s) are clogged. • Check and clean the filter of the supply hose(s).
	Water supply pressure to tap or house is too low or too high. • Contact a plumber to have the water pressure checked or restored to the operating requirements.
	Water supply is connected with leak limiting hose(s). • Do not use leak limiting hose(s).
Drainage Error	**The appliance is paused during a cycle for a few minutes.** • The cycle will be cancelled and any water remaining in the drum will be drained.

Symptoms	Possible Cause & Solution
Spin Error	**Rebalancing operation is not successful.** • The automatic attempt to rebalance the laundry was not successful. The cycle has been paused to allow the laundry to be manually adjusted.
	The load is too small. • Add more items to allow the appliance to balance the laundry.
	Heavy items are mixed with lighter items. • Wash items of somewhat similar weight.
	The load is out of balance. • Manually redistribute the laundry if laundry have become tangled.
Frozen Error	**Inlet / drain hose or drain pump is frozen.** • Thaw the hoses or pump.
Pressure Sensor Error	**The water level sensor is not working correctly.** • Close the water taps, unplug the appliance, and call for service.
Motor Rotation Error	**A motor error has occurred.** • Remove some of the load and start washing again. • If the error code is still displayed, call for service.
Overflow Error	**Water overfills due to the faulty water valve.** • Close the water taps, unplug the appliance, and call for service.
Clutch Error	**Clutch error.** • Unplug the appliance and call for service.
Temp Sensor Error	**Control error.** • Unplug the appliance and wait 60 seconds. Reconnect power and try again. • If the error code is still displayed, call for service.
Drain Motor Error	**A motor error has occurred.** • Unplug the appliance and call for service.
Vibration Sensor Error	**Vibration sensor malfunctions.** • Call for service.

Noises

Symptoms	Possible Cause & Solution
Rattling and clanking noise	**Foreign objects, such as keys, coins, or safety pins may be in the drum.** • Stop the appliance, check the drum for foreign objects. If noise continues after the appliance is restarted, call for service.

Symptoms	Possible Cause & Solution
Thumping sound	**Heavy laundry may produce a thumping sound. This is usually normal.** • If the sound continues, the appliance is probably out of balance. Stop and redistribute the laundry.
	The laundry may be out of balance. • Pause the cycle and redistribute the laundry after the door unlocks.
Vibrating noise	**Packaging materials are not removed.** • Remove packing materials.
	The laundry may be unevenly distributed in the drum. • Pause the cycle and redistribute the laundry after the door unlocks.
	Not all levelling feet are resting firmly and evenly on the floor. • See the section **Levelling the Appliance** to adjust and level the feet.
	Floor is not rigid enough. • Check if the floor is solid and does not flex. See the section **Installation Place Requirements** to select the proper location.

Operation

Symptoms	Possible Cause & Solution
Appliance will not operate.	**Control panel has powered off due to inactivity.** • This is normal. Press the **POWER** button to turn on the appliance.
	Appliance is unplugged. • Make sure that the cord is plugged securely into a working outlet.
	Water supply is turned off. • Turn on the water supply tap completely.
	Controls are not set properly. • Make sure the cycle is correctly set. Close the door and press the **START/PAUSE** button.
	Circuit breaker/fuse is tripped/blown. • Check house circuit breakers/fuses. Replace fuses or reset breaker. The appliance should be on a dedicated branch circuit. The appliance will resume the cycle where it stopped once power is restored.
	Control needs to be reset. • Press the **POWER** button, then reselect the desired programme and press the **START/PAUSE** button.

Symptoms	Possible Cause & Solution
Appliance will not operate.	**START/PAUSE was not pressed after a cycle was set.** • Press the **POWER** button, then reselect the desired cycle and press the **START/PAUSE** button. If the **START/PAUSE** button is not pressed within a certain time, the appliance will be turned off.
	Extremely low water pressure. • Check another tap in the house to make sure that household water pressure is adequate.
	Appliance is too cold. • If the appliance has been exposed to temperatures below freezing for an extended period of time, allow it to warm up before pressing the **POWER** button.
	Appliance is heating the water or making steam. (some models only) • The drum in the appliance may stop operating temporarily during certain cycles, while water is safely heated to a set temperature.
Detergent is not dispensed completely or not dispensed at all.	**Too much detergent is used.** • Follow the guidelines provided by the detergent manufacturer.
Water leaking	**Water inlet hose connection is loose at tap or appliance.** • Check hoses for leaks, cracks and splits. • Tighten hose connections.
	House drain pipes are clogged. • The appliance pumps out water very rapidly. Check for water backing up out of the drain pipe during drain. If water is seen coming out of the drain, check for proper drain hose installation and check for restrictions in the drain. Contact a plumber to repair drain pipe.
	Drain hose has come out of drain or is not inserted far enough. • Tie drain hose to supply hose or standpipe to prevent it from coming out during drain. For smaller drain pipes, insert the drain hose into the pipe as far as the drain hose flange. For larger drain pipes, insert the drain hose into the pipe 2.5 - 5 cm past the flange.
	A large item such as a pillow or blanket is above the top of the drum. • Stop the appliance and check the item. Make sure the item does not crest above the top edge of the drum.
Appliance is not filling properly.	**Filter is clogged.** • Make sure the inlet filters on the fill valves are not clogged.
	Supply hoses may be kinked. • Check that supply hoses are not kinked or clogged.
	Insufficient water supply. • Make sure that both hot and cold water taps are turned on all the way.

Symptoms	Possible Cause & Solution
Appliance is not filling properly.	**Hot and cold supply hoses are reversed.** • Check supply hose connections.
Appliance will not drain water.	**Drain hose is kinked.** • Ensure that the drain hose is not kinked.
	Drain is located higher than 1.2 m above the floor. • Make sure that the drain hose is no higher than 1.2 m above the bottom of the appliance.
Cycle time is longer than usual.	**The load is too small.** • Add more items to allow the appliance to balance the laundry.
	Heavy items are mixed with lighter items. • Always try to wash items of somewhat similar weight to allow the appliance to evenly distribute the weight of the laundry for spinning.
	The load is out of balance. • Manually redistribute the laundry if laundry have become tangled.

Performance

Symptoms	Possible Cause & Solution
Poor stain removal	**Proper options are not selected.** • Heavier soils and tougher stains may require extra cleaning power. Select the **Soak** option to boost the cleaning power of the selected cycle.
	Previously set stains. • Items that have previously been washed may have stains that have been set. These stains may be difficult to remove and may require hand washing or pretreating to aid in stain removal.
Staining	**Bleach or softener dispensed too soon.** • Dispenser compartment is overfilled causing bleach or softener to dispense immediately. ALWAYS measure bleach to prevent overfilling. • Close the dispenser drawer gently.
	Bleach or softener was added directly to the laundry in the drum. • Always use the dispensers to ensure that laundry products are properly dispensed at the right time in the cycle.
	Clothes were not properly sorted. • Always wash dark colours separately from light colours and whites to prevent discolouration. • Never wash heavily soiled items with lightly soiled items.

Symptoms	Possible Cause & Solution
Wrinkling	**Appliance is not unloaded promptly.** • Always remove items from the appliance as soon as the cycle is complete.
	Appliance is overloaded. • The appliance can be fully loaded, but the drum should not be tightly packed with items. The door of the appliance should be closed easily.
	Hot and cold water supply hoses are reversed. • Hot water rinse can set wrinkles in clothes. Check the supply hose connections.
Musty or mildewy odour in the appliance	**Inside of drum was not cleaned properly.** • Run the **Tub Clean** function regularly.

Wi-Fi

Symptoms	Possible Cause & Solution
Your home appliance and smartphone are not connected to the Wi-Fi network.	**The password for the Wi-Fi that you are trying to connect to is incorrect.** • Find the Wi-Fi network connected to your smartphone and remove it, then register your appliance on **LG ThinQ**.
	Mobile data for your smartphone is turned on. • Turn off the **Mobile data** of your smartphone and register the appliance using the Wi-Fi network.
	The wireless network name (SSID) is set incorrectly. • The wireless network name (SSID) should be a combination of English letters and numbers. (Do not use special characters.)
	The router frequency is not 2.4 GHz. • Only a 2.4 GHz router frequency is supported. Set the wireless router to 2.4 GHz and connect the appliance to the wireless router. To check the router frequency, check with your Internet service provider or the router manufacturer.
	The distance between the appliance and the router is too far. • If the distance between the appliance and the router is too far, the signal may be weak and the connection may not be configured correctly. Move the location of the router so that it is closer to the appliance.

LG

Life's Good