LG LED Signage
(VIDEO SWITCH)

SBAA-D05

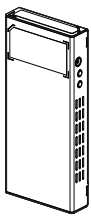

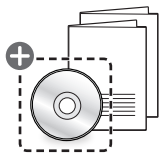



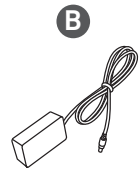

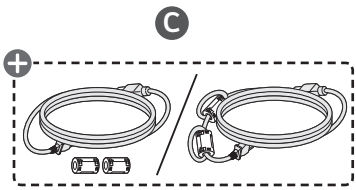

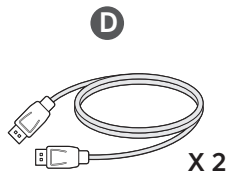

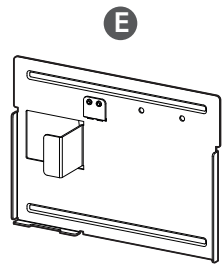



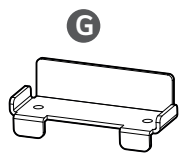

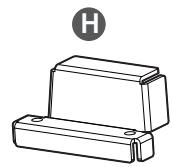

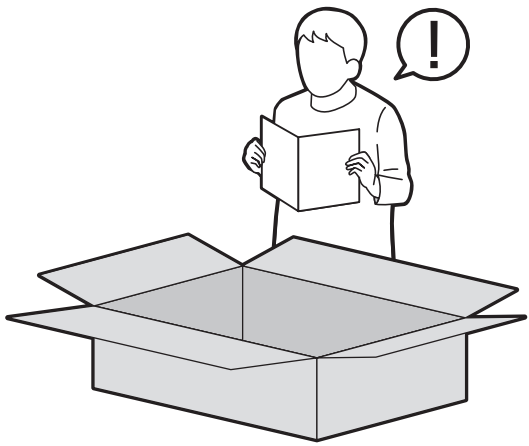

▶ Worldwide : www.lg.com/id-manual
▶ 한국 : www.lgservice.co.kr

PDF



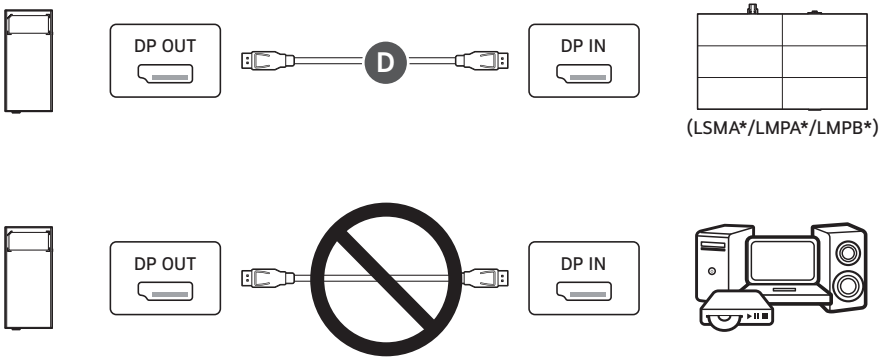
DP OUT
D
DP IN
(LSMA*/LMPA*/LMPB*)
DP OUT
DP IN

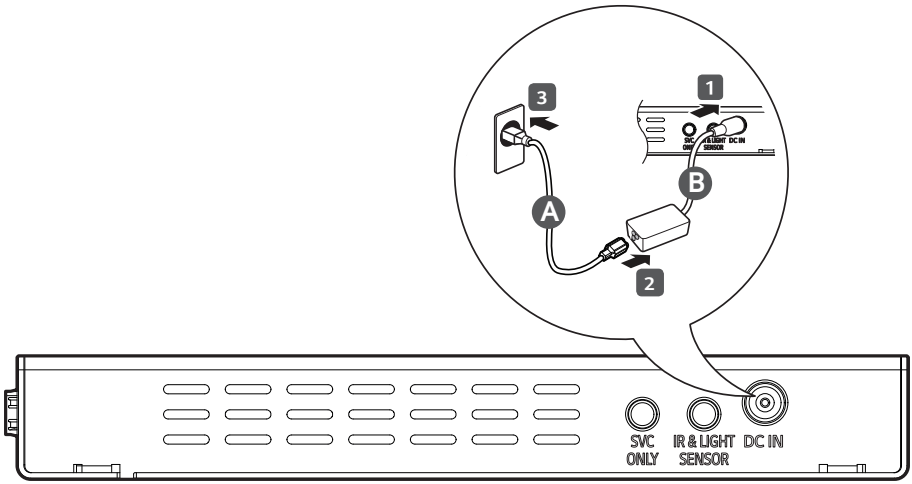
3
1
A
B
2
SVC ONLY
IR & LIGHT SENSOR
DC IN

(LSMA*/LMPA*/LMPB*)

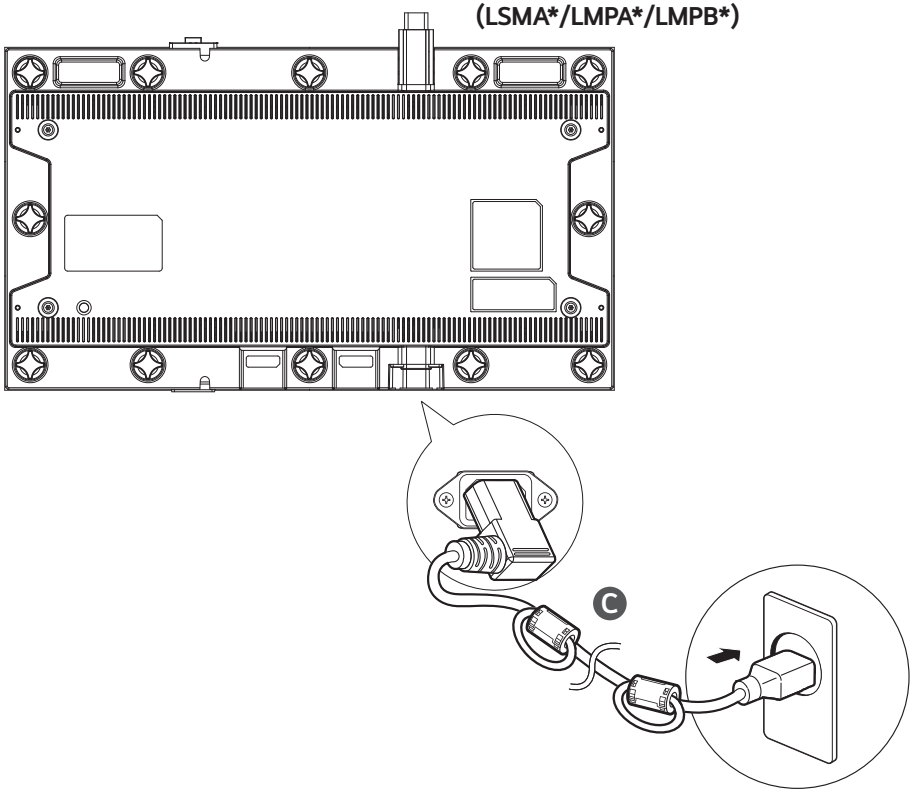



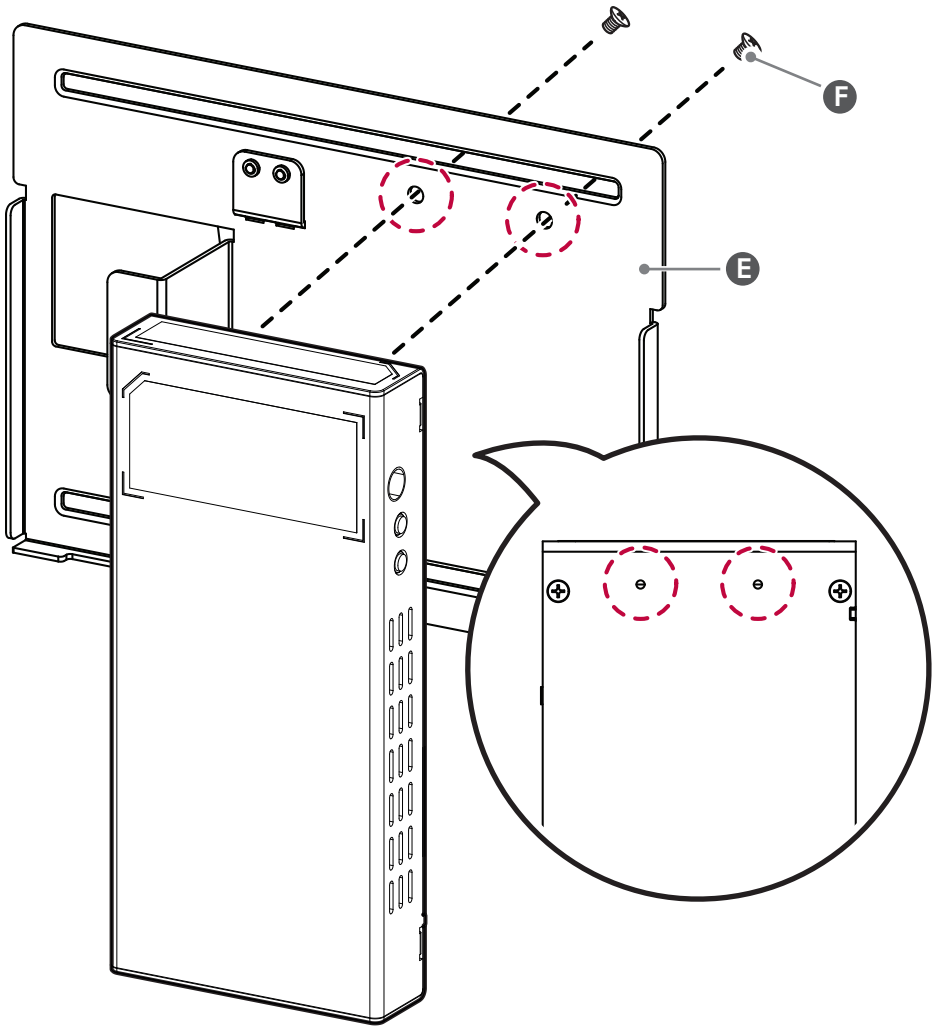
F
E



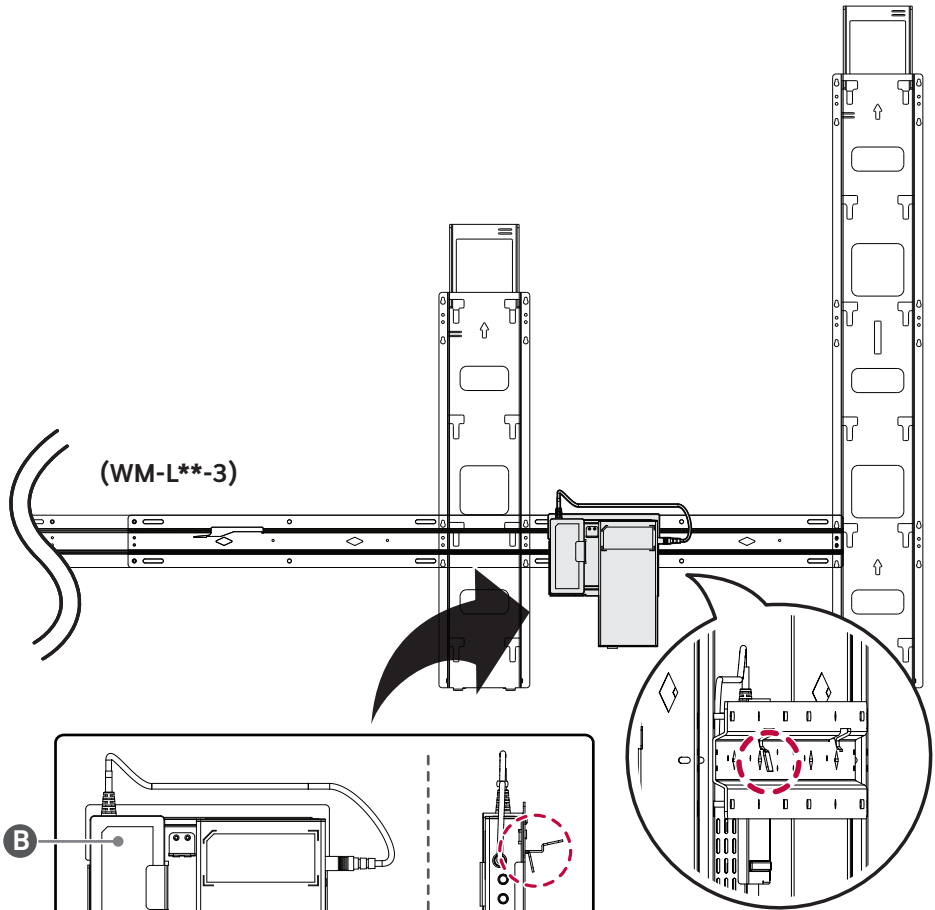
(WM-L**-3)

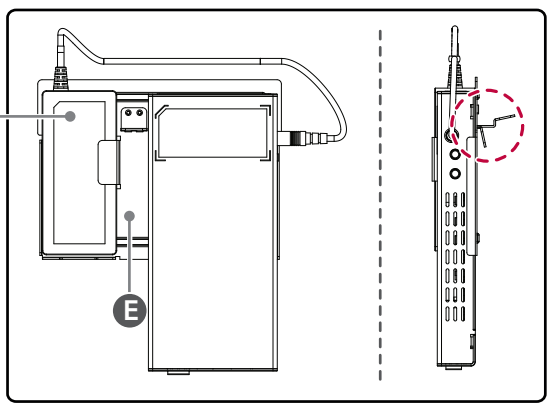
B
E

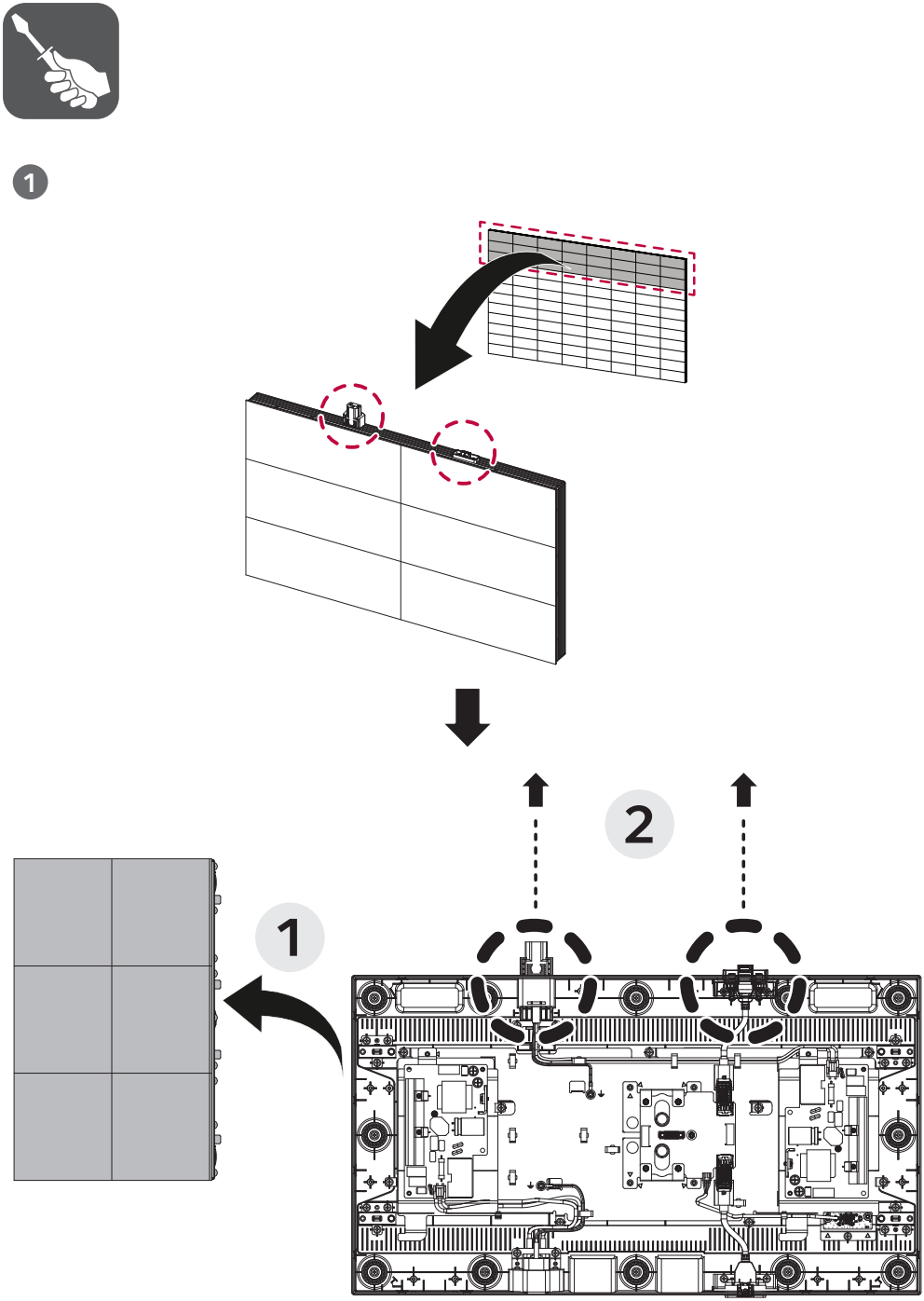
1
2
1

2

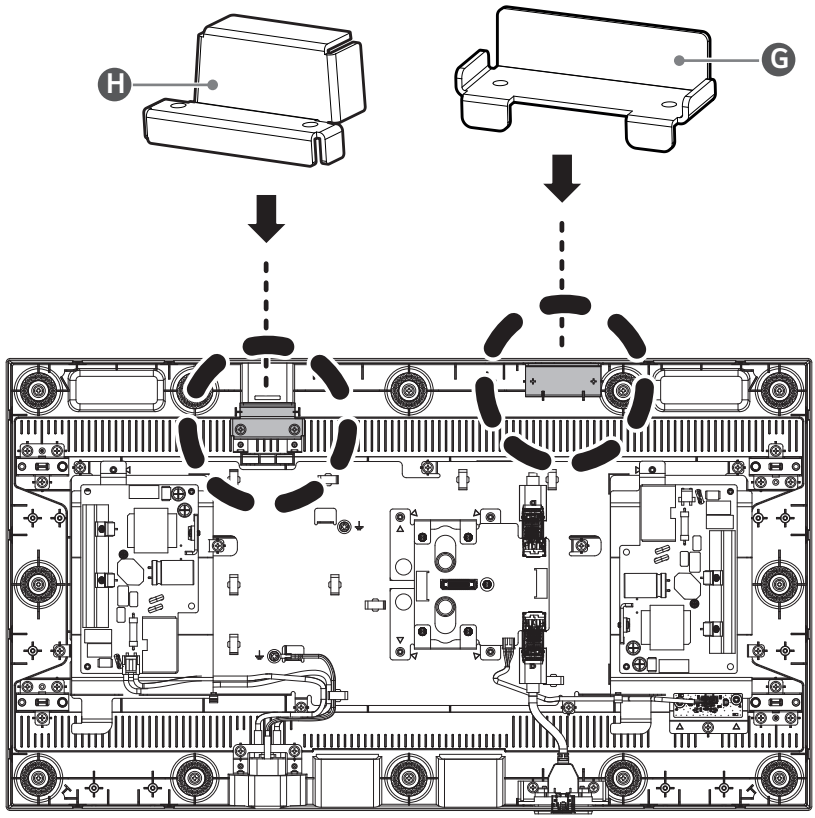

3

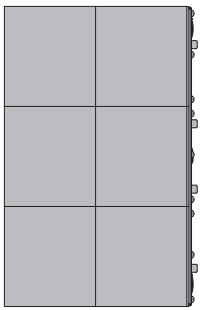

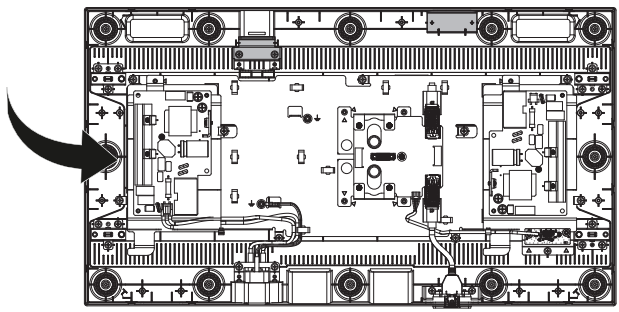



MFL05754801
(2601-REV02)

