LG
Life's Good

UltraGear™
(LED COMPUTER MONITOR)
32GS75Q

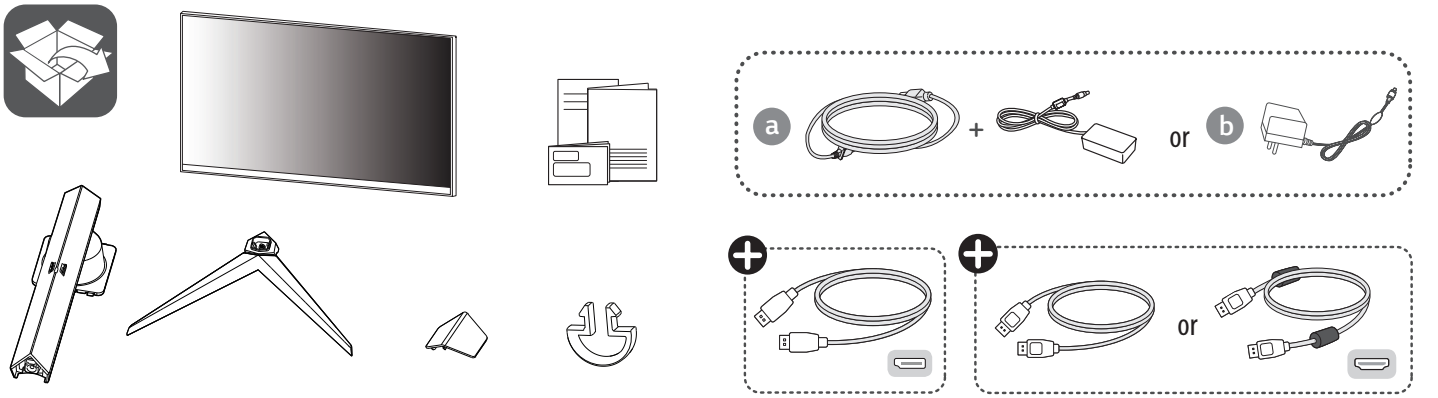

English Depending on country

You can download manuals from the LGE website.
OWNER'S MANUAL AND REGULATORY INFO. are available at *https://www.lg.com/au/support/manuals*.
PLEASE READ SAFETY INFORMATION BEFORE INSTALLATION AND USE. SCAN QR CODE TO ACCESS.

MFL72110305
(2404-REV00)

www.lg.com



English It is recommended that use the supplied components.

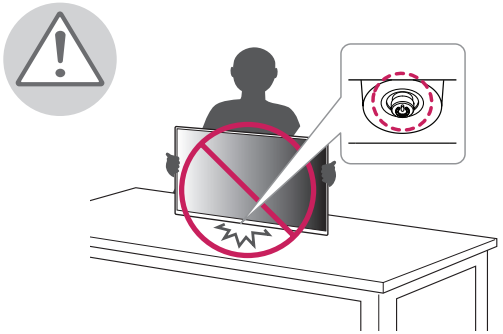

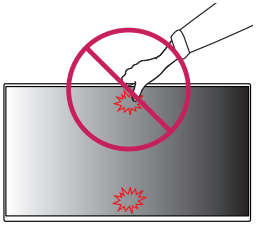

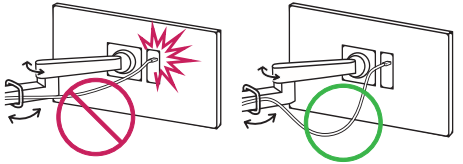



1

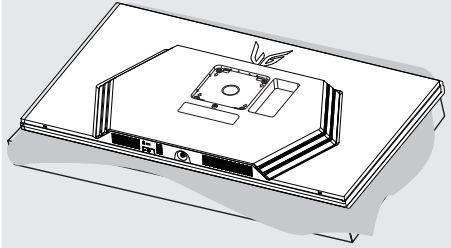

2

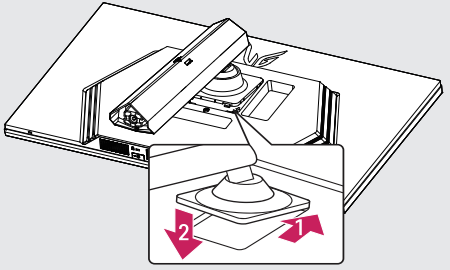

3

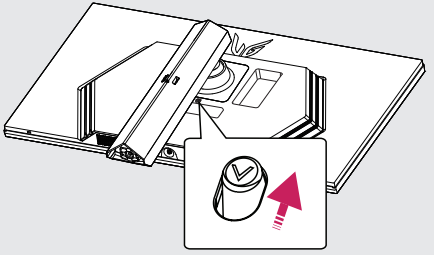

4

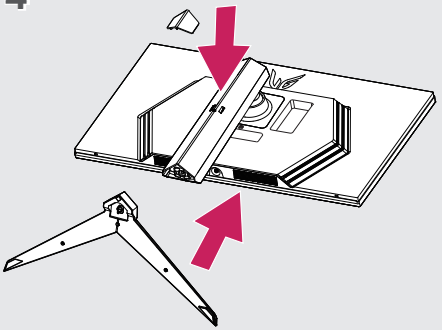

5

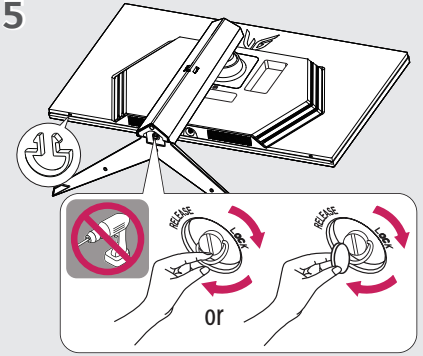

6

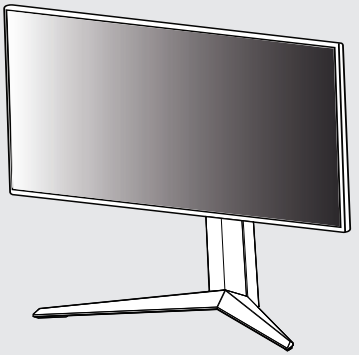

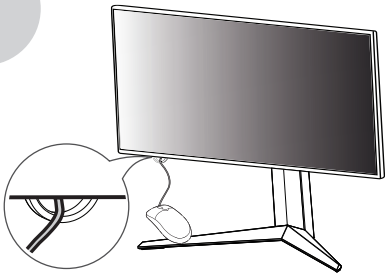

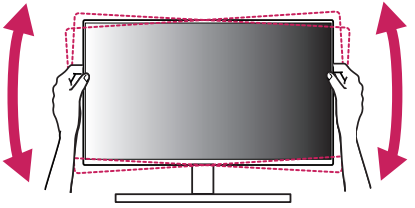

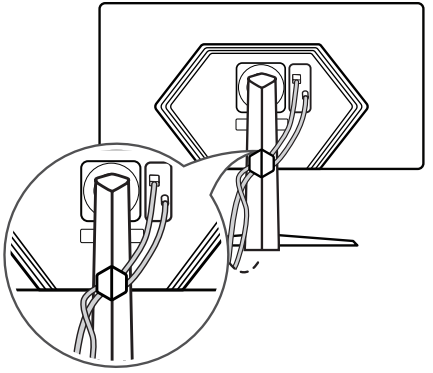

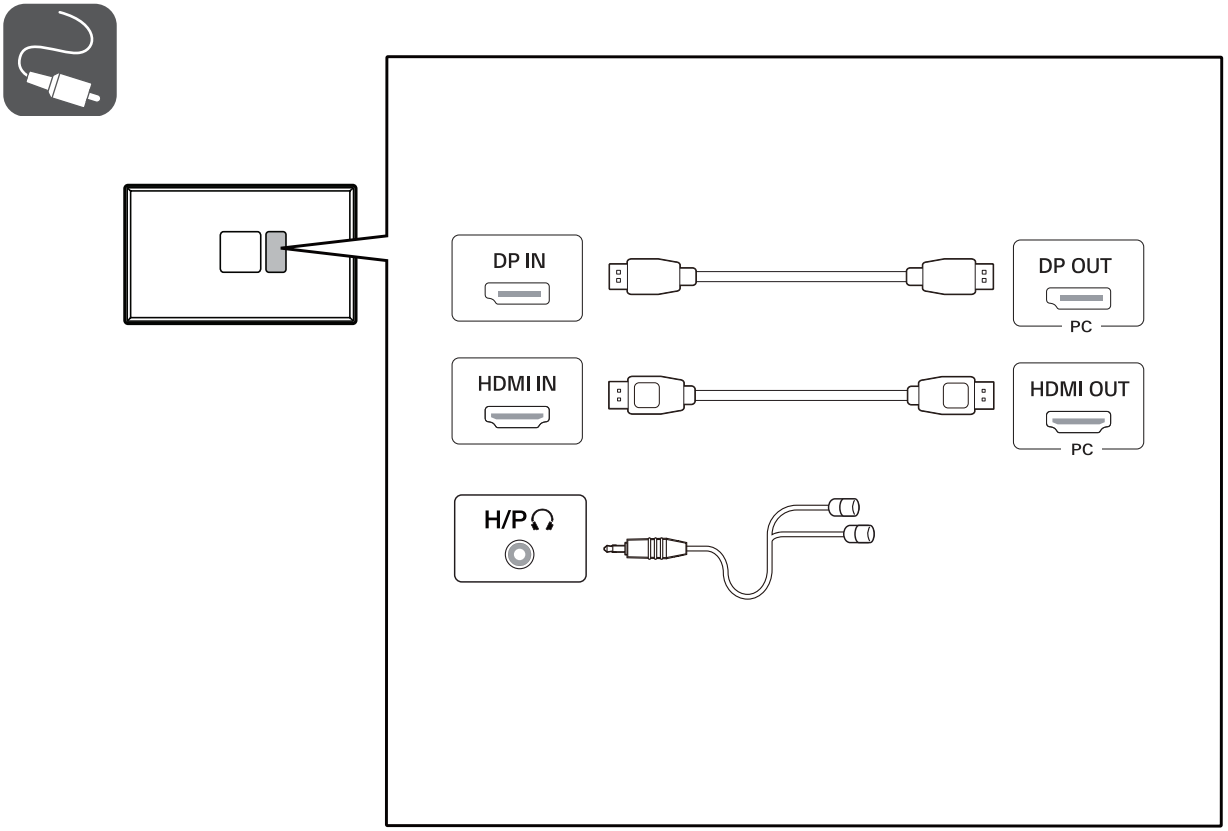
DP IN
DP OUT
PC
HDMI IN
HDMI OUT
PC
H/P

English

- Using a DVI to HDMI / DP (DisplayPort) to HDMI cable may cause compatibility issues.
- Make sure to use the supplied cable. Otherwise, this may cause the device to malfunction.

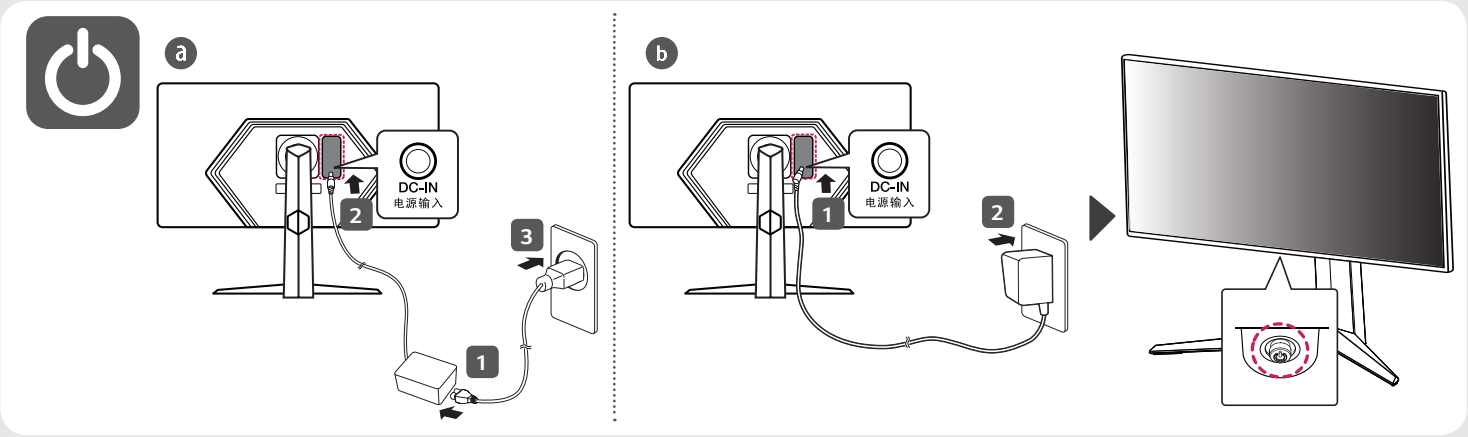
a
DC-IN
电源输入
2
3
1
b
DC-IN
电源输入
1
2




LG
Life's Good