繁體

www.lg.com

Copyright © 2023 LG Electronics Inc.
All Rights Reserved. 版權所有。

LG OLED TV
用戶手冊

安全及參考

請於操作產品前仔細閱讀本手冊並將其保留以供未來參考之用。

產品的型號和序號位在產品的背面和其中一個側邊。請記下下列資料，以備需要服務時使用。

型號 _____

序號 _____

MFL71946372230 1REV00

閱讀本手冊前

- 請於操作電視前仔細閱讀本手冊並將其保留以供未來參考之用。
- 在網站上，您可以下載手冊，包括安裝，使用，疑難排解，規格，授權等，以及在電腦或流動裝置上檢視其內容。
- 使用指南：有關此電視的詳情，請參閱產品隨附的使用指南。（視型號而定）
  - 若要開啓使用指南 ⚙ → [⚙] → [支持] → [使用指南]

選購配件

- 另購項目可因改善品質而隨時變更或修改，恕不另行通知。如要購買這些項目，請聯絡經銷商。這些裝置僅配合某些型號使用。
- 型號名稱或設計可因產品功能升級，製造商或有關政策而有所改變 。
- 用來連接天線和外部裝置的纜線必須另購。

注意

- 本手冊的產品規格或內容或會因產品功能升級而隨時變更，恕不另行通知。
- 產品隨附的部件視乎型號而可能有所不同。
- 插圖可能與實際情況有差異。

警告! 安全指示

注意
觸電的風險 請勿開啓

注意：爲減低觸電風險，請勿移除蓋板（或背板）。當中並無用戶可自行維修的組件。請向合資格維修人員諮詢相關維修安排。

此標誌用作提醒使用者，產品的機殼內有非絕緣保護的「危險電壓」，相關電壓的強度足以構成觸電風險。

此標誌用作提醒使用者，電器附帶的相關產品說明，已列出重要操作及保養（維修）指示。

警告：爲減低火災或觸電風險，請勿將本產品置於雨中或潮濕環境中。

- 爲防止火災蔓延，請隨時保持本產品遠離蠟燭或其他有明火的物品。
- 請勿將電視及遙控器放置於下列環境：
  - 勿讓產品直接暴曬在陽光下。
  - 高濕度範圍，例如浴室。
  - 發熱源附近例如煮食爐及其他發熱裝置。
  - 輕易暴露於蒸氣或油煙如廚房工作範圍或放濕器附近。
  - 暴露於雨水或當風位置。
  - 勿讓液體滴入或潑灑到裝置，並且勿在裝置上方（例如裝置上方的架子上）放置裝有液體的物體（例如花瓶，杯子等）。
  - 靠近如汽油或蠟燭等易燃物，或將電視置於空調直吹處。
  - 請勿安裝在灰塵過多的位置。

  否則，可能造成火災，觸電，燃燒/爆炸，故障或產品變形。
- 通風
  - 請將電視安裝在通風良好的位置。請勿安裝在狹窄的空間 （例如書架）。
  - 請勿將產品安裝於地毯或軟墊上。
  - 裝置插入時勿讓衣物或其他材料擋住或蓋住產品。
- 小心勿觸碰通風口。長時間觀看電視時，通風口可能會產生高溫。

- 保護電源線以防止受到物理性如扭曲，折彎，緊夾，受到門的擠壓或踩踏或機件受損。請加倍留意插頭，牆上插座以及裝置的電線出口。
- 連接電源線時，請勿搬動電視。
- 請勿使用受損或鬆脫的電源線。
- 拔除電源線時，請確實握住插頭。不要拉扯電源線來拔除電視電源。
- 請勿在同一交流電源插座上連接過多裝置，因爲這可能導致火災或觸電。
- 切斷裝置主電源
  - 電源插頭與裝置中斷連接。如有緊急情況，電源插頭必須保持隨時可用。
- 切勿讓孩童攀爬於電視上。否則將導致電視翻倒並引致嚴重受傷。
- 室外天線接地 （可能依國家/地區而異）：
  - 如果安裝了室外天線，請遵循下列注意事項。室外天線系統不應設置於接近高壓電電線或其他路燈照明或電源電路之處，或可能接觸此類輸電線或電路之處，否則可能導致人員傷亡。
- 切勿在雷擊或閃電時碰觸本裝置或天線。將可能導致觸電。
- 確保電源線安全地連接到電視和牆上插座，若未安全連接，插頭和插座可能損壞，並且在極端情況下可能引發火災。
- 請勿將金屬或易燃物體插入產品。若有異物掉入產品內，請拔除電源線，並聯絡服務中心。
- 插頭插上時，請勿觸碰電源線末端。將可能導致觸電。
- 如發生任何下列情況，即時切斷產品電源並聯絡當地服務中心。
  - 產品曾受損毀。
  - 若有水或其他物質滲入產品 （像是 AC 轉接器，電源線或電視）。
  - 若聞到電視發出煙霧或其他臭味。
  - 出現雷擊或閃電時，或者長時間不使用產品時。

  除非拔除電源線，否則即使用遙控器或按鈕關閉電視，AC電源仍會保持接通狀態。
- 請勿在電視附近使用高電壓的電子設備（例如：滅蚊機）。這可能引起產品故障。
- 未經 LG Electronics 書面授權，請勿嘗試以任何方式修改本產品。可導致火災或觸電。如需服務或維修，請洽詢您當地的客戶服務中心。未經授權的修改可能會讓使用者失去操作本產品的權力。
- 請僅使用經授權的附件 / LG Electronics 所認可的配件。否則，可能導致火災，觸電或產品無法正常運作。
- 切勿拆開 AC 適配器或電源線。可能導致火災或觸電。
- 請小心處理適配器避免掉落或被撞擊。遭到撞擊可能會對產品造成損害。
- 爲降低發生火災或觸電的風險，請勿用濕手碰觸電視。若電源插頭潮濕或佈滿灰塵，請將插頭完全擦乾或擦去灰塵。
- 電池
  - 將附件 （電池等） 存放在安全的位置並遠離兒童。
  - 請避免短路，拆卸或讓電池過熱。請勿用火焚化電池。電池不應暴露於高溫的地方。
  - 注意：如果更換的電池類型不正確，會有引發火災或爆炸的風險。
- 移動
  - 搬動時，確定已關閉產品電源，拔出插頭，並取下所有纜線。可能需要兩個或更多人搬運較大型的電視。請勿按壓設備屏幕或在電視屏幕上施力壓力。否則，可能導致產品損壞，造成危險或傷害。
- 請將包裝防潮材料或乙烯基包裝物料放置在兒童無法觸及的地方。
- 勿撞擊產品或讓任何物體掉入產品內部，也不要讓任何物體掉落到螢幕上。
- 請勿以手或指甲，鉛筆或鋼筆等尖銳物件用力按壓屏幕，或使其刮花。可能會使螢幕損壞。
- 清潔
  - 清潔時，請拔除電源線並以乾軟布輕拭，以避免刮傷。請勿直接在電視上噴水或其他液體。
    請勿使用會對產品及其屏幕造成損壞的化學品，例如玻璃清潔劑，空氣清新劑，殺蟲劑，潤滑劑，汽車或工業用蠟劑，磨光劑，稀釋劑，苯，酒精等。否則，可能導致觸電或產品損壞。

安裝

抬起與移動電視

不論任何類型及大小，抬起或移動電視時，請閱讀下文，確保安全搬運，以防電視刮花或受損。

- 建議以包裝箱或連同電視原有的包裝材料移動電視。
- 移動或抬起電視前，中斷電源線和所有纜線的連接。
- 當握住電視時螢幕應面向外側以避免損壞。
- 平穩地握住電視外框的外側及底部。確保不要握住透明部分，喇叭或喇叭排孔區域。
- 大型電視需最少二人共同運送。
- 使用人手搬運電視時，請根據以下圖示握住電視。
- 搬運電視時，請勿搖動或令電視受過度震動。
- 搬運電視時，保持電視直立，切勿轉向電視的側面，或向左方或右方傾斜電視。
- 請勿過份用力，否則可能導致外框底座屈曲 / 折彎，會損壞螢幕。
- 操作電視時，請勿損壞凸起的按鈕。

⚠

- 避免時常點按畫面，否則會導致畫面受損。
- 將底座安裝至電視組合時，電視螢幕應面向下方並放於附有軟墊的枱面或平面上以避免螢幕磨損。

安裝到桌面

1 將電視機抬起並擺放在桌子上，保持機身豎直。
  - 與牆壁保留最少 10 厘米空間以保持空氣流通。（視型號而定）

2 將電源線連接至牆上電源插座。

⚠

- 在組裝產品時，請勿於螺絲零件處使用油或潤滑劑等外來物質。（這樣可能會導致產品損壞。）
- 請勿使用任何未經批准部件，以確保安全和產品壽命。
- 因使用未經批准物品而造成的任何損壞或傷害並不包括在製造商的保修範圍內。
- 如將電視安裝於底座上，請採取措施以預防產品翻倒。否則，將可能導致電視翻倒並引致受傷。
- 組裝支架時，確認所有提供的螺絲均已安裝。如果螺絲未完全鎖緊，產品可能會傾斜或翻倒，造成損壞。過度用力鎖緊螺絲，可能會因螺絲接頭磨損而導致脫落。
- 使用支架安裝在櫃或架上時，請確定它的寬度大於電視寬度。（視型號而定）
- 如果將電視機放置在底座，電視螢幕可能會稍微後傾。 如因底座下方放有異體，或底座未放在平坦表面而導致底座不平，產品可能會倒落，並造成人員受傷或產品損壞。（視型號而定）

將電視固定到牆上

1 在電視背面插入並擰緊環首螺栓或 固定片和螺栓。
  - 如果在環首螺栓位置中插入了螺栓，請先將這些螺栓取出。

2 用螺栓將固定片安裝到牆上。將掛牆架的位置對準電視背面的環形螺栓。

3 以堅固繩索將環形螺栓及掛牆架連接。確保繩索與平面保持水平。

- 使用堅固平臺或矮櫃以穩固承托電視。
- 掛牆架，螺栓及繩索需另行購買。您可從本地經銷商取得其他配件。

底座 (選購配件)

（視型號而定）

底座	型號
SR-G3WU55	OLED55G3*
SR-G3WU65	OLED65G3*
SR-G3WU8377	OLED77/83G3*

安裝到牆上

將選購的掛牆架小心安裝在電視後方，再將掛牆架安裝在與地面垂直的堅固牆壁上。將電視安裝在其他建築物料時，請聯絡合資格的人員。LG 建議應由合資格的專業安裝人員進行掛牆安裝。建議使用LG 提供的掛牆架。LG 掛牆架容易與連接的纜線一起移動。如不使用 LG 掛牆架，請使用能將裝置穩固於牆上並有足夠空間連接外部裝置的掛牆架。建議安裝固定的掛牆架之前先連接所有纜線。

⚠

- 將電視安裝於掛牆架前需反方向轉動底座以將之移除。
- 如需螺絲和掛牆架的詳細資訊，請參閱其購買的資訊。
- 如希望將產品安裝於牆上，請於產品背面安裝 VESA 標準掛牆介面（選購配件）。於安裝套件以使用掛牆架（選購配件）時請注意固定以防墜落。
- 將電視以掛牆方式安裝時，務必避免使用電視背面的電源線和訊號線懸掛。
- 如牆壁會暴露於油或油霧，請勿在上面安裝此產品。此舉可能會損壞產品，並導致產品掉落。
- 安裝全接觸掛牆架時，可能因爲某些牆壁狀況導致電視無法牢固地繫在牆上。

安全注意事項

（OLW480B, LSW440B 除外）

- 專業安裝人員應仔細閱讀本手冊，以確保正確安裝。
- 專業安裝人員應在安裝後將本手冊轉寄給客戶，並且鼓勵他們閱讀並將其存放在方便將來參考的地方。

  閱讀安裝手冊後，請將其放在方便將來參考的地方。

⚠

- 請商店指定的專業安裝人員安裝產品。

  由專業安裝人員以外的人安裝是非常危險的，因爲可能導致人員受傷。
- 不要將產品安裝在不能承受其重量的不穩定場所。

  如果安裝地點不夠牢固且堅硬，產品可能會掉落，甚至可能造成人員受傷。
- 安裝後若要移動或更換產品，請先與商店指定的專業安裝人員聯繫。

  安裝是一項技術任務，如果個人試圖親自安裝或移動產品，可能會產生安全議題。
- 安裝後請勿掛在產品上，或使其受到嚴重衝擊。

  麼做可能會導致產品掉落，造成人員受傷。
- 將產品安裝在牆上時，請勿從電視背面懸掛電源線或訊號線。

  這會使電線受損，導致火災，電擊或產品故障。
- 在安裝產品時，務必要戴上工作手套。
  - 徒手安裝時若未戴任何東西保護雙手，可能令手部受傷。
- 根據安裝手冊中的說明安裝產品。

  若未根據安裝手冊中的說明安裝產品，可能導致嚴重的人員受傷或產品損壞。
- 安裝產品或調整產品高度時，請確保至少有兩名安裝人員。

  嘗試親自安裝或調整可能會導致人員受傷或產品損壞。
- 在繼續安裝之前，請確保有牆壁可用。使用隨產品提供的錨及螺絲。

  使用任何未經授權的錨或螺絲，可能無法支撐產品的重量，招致安全風險。
- 在牆上鑽孔以進行安裝時，務必使用鑽頭和指定直徑的鑽機。請遵循有關孔深的說明。

  以非安裝手冊指定的方式鑽孔和安裝產品，可能導致安裝不穩定和潛在的安全問題。
- 不要用濕布擦拭產品，也不要在安裝產品處的下方使用任何加熱設備或加濕器。

  液態水或蒸氣可能滲入產品，而過熱可能導致火災，觸電或故障。
- 請勿將產品安裝在靠近防火灑水系統或探測器的地方，可能發生振動或電擊的地方，或高壓電線或電源附近。
- 在安裝之前，從牆壁插座拔下產品的電源線。

  插入電源線同時安裝產品，可能會導致電擊或火災。
- 請勿徒手安裝產品。確保戴上工作手套。

  嘗試在未戴工作手套的情況下進行安裝，可能會造成人員受傷。
- 用隨附的纜線連接產品。使用未經授權的纜線，可能會因爲與牆壁摩擦而造成損壞。確保使用提供的纜線性別。（這可能因型號而異。）

安裝前

（OLW480B, LSW440B 除外）

- 除了將電視安裝在牆上以外，請勿將本產品用於其他任何目的。
- 避免因安裝不慎造成產品損壞和安全事故，或使用不正確或未經授權的掛牆架。
- 按照安裝手冊中的說明可輕鬆安裝掛牆架。
- 如果您無法完全理解安裝程序，請立即停止安裝，並聯繫服務中心。

  如果在詢問後仍然無法解決安裝問題，請使用專業的安裝程式。
- 建議將此產品安裝在混凝土牆或木支撐栓上。不建議將此產品安裝在其他表面（乾牆、膠合板、磚塊等）。安裝不當可能會導致產品掉落。
- 產品僅安裝在垂直的牆壁。

  請勿安裝在超出建築標準的傾斜牆壁上，也不要安裝在過度傾斜的牆壁或天花板上。

  LG 不對產品安裝不當所引起的問題負責，例如嚴重傾斜的牆壁和天花板。
- 安裝前檢查隨附的配件。對於內包裝打開後任何遺失或損壞的配件，我們一概不負責。
- 當嬰兒或小孩吞下所附配件時，可能發生窒息等各種安全事故。將隨附的配件放在嬰兒和兒童接觸不到的地方。
- 鎖螺絲時，請擰緊直至完全貼合。

  擰緊螺絲時，避免過度用力。這樣做可能會損壞牆壁和產品，或降低產品堅固度或效能。
- 避免安裝超過指定張力負載的電視，並且勿對產品施加任何外力。
- 在安裝過程中請小心使用作業工具，以免發生事故。

安裝工具

- “+”字型螺絲刀 （手動或電動） / 級別 / 鑽孔 / 混凝土用 Ø 8 毫米鑽頭，或鋼用 Ø 4 毫米鑽頭

將電視固定到牆上

（OLW480B, LSW440B 除外）

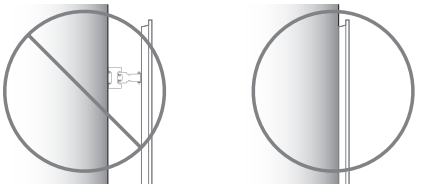

- 安裝後請使用靠牆的電視機。

如何固定錨和螺絲

（OLW480B, LSW440B 除外）

請確保：

- 檢查牆壁和飾面材料和厚度是否符合安裝手冊規格。開始進行安裝前，必須先確認牆壁能承受電視的重量。
- 應在無裂縫混凝土牆上使用封閉錨和螺絲。
- 切勿將產品安裝在石膏板或紙壁或中密度纖維板（MDF） 上。當需要在這類牆上安裝產品時，必須將錨定螺絲鎖至擋土牆（混凝土）或飾面內部的木支撐栓。
- 掛牆架應固定在螺樁上。這通常是輕而易舉之事，但視乎個別情況而定，安裝時不一定都能順利安裝至螺樁。若遇此情況，可利用乾牆錨如套掛螺絲等來解決問題。若是使用乾牆錨，請確認錨和牆壁都能承受電視的重量。請注意，所提供的錨不一定適用於所有情況，因此，請您洽詢當地專業人員，由其協助確認。
- 其他未指定的牆壁必須能夠承受超過 70 kgf（686 N） 的拉出載荷，而每個緊固件剪切載荷超出 100 kgf （980 N）。
- 混凝土適用 Ø 8 毫米鑽刀，若是在木支撐栓上鑽孔，則適用鐵錘（撞擊式）鑽頭或 Ø 4 毫米鑽刀。

適用於在混凝土牆上安裝

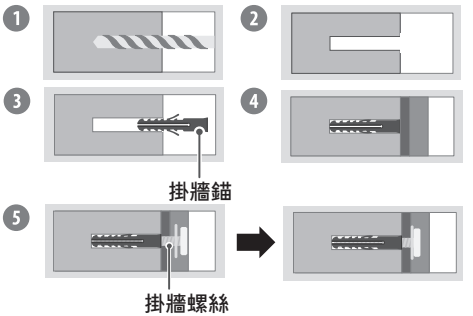

1 用 Ø 8 毫米鑽頭在錨定固位置鑽孔，深度則爲 80 毫米到 100 毫米。
2 清理鑽孔。
3 插入封閉的錨固件，將掛牆架固定在孔內。（使用錘子將錨插入）。
4 將掛牆架緊推向牆壁，使其與孔位置相匹配。
5 鎖緊螺絲將掛牆架固定到孔。此時，將螺絲鎖緊至 45 kgf/cm 至 60 kgf/cm 之間的扭力。

適用於在木支撐栓上安裝

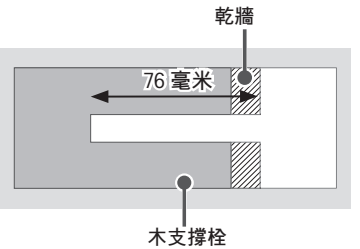

使用 Ø 4 毫米鑽頭在木頭上鑽出 76 毫米深的孔。（清理鑽孔。）

若無使用掛牆錨，則可將掛牆螺釘直接鎖至木支撐栓。

安裝後

- 從側邊連接額外線材時，建議在連接之前先以水平或垂直方向抓住電視中心點，提拉產品以確定和牆壁之間有足夠距離。
- 從底部連接額外線材時，建議在連接之前先將電視從牆上的支架上鬆開。

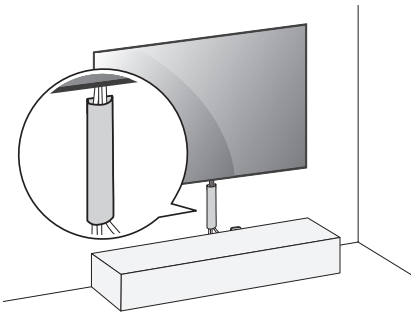

（例如）

- 使用纜線管理系統，將整理好的纜線放在電視機的底部，如下圖所示。線材管理系統並非隨產品提供，需要另外購買。
- 安裝產品後，一定要用它附著在牆上。
  - 在未附著到牆上時使用本產品，可能損害或搖晃產品。
- 切勿使用鋒利硬物來拆除纜線保護蓋。以免損壞纜線或機身。及造成人身傷害。（視機型而定）

天線/纜線

使用 RF 線 （75 Ω） 將電視連接至牆壁天線插座。

- 如使用兩部電視以上，使用訊號分線器。
- 如畫面品質惡劣，正確安裝訊號放大器以改善圖像品質。
- 如有連接天線，但畫面品質惡劣，嘗試以正確方向重新對準天線。
- 天線及轉換器並不提供。
- 若是不支援 Ultra HD 廣播的位置，此電視就無法直接接收 Ultra HD 廣播。

啓動電視

開啓電視

只需使用按鈕，即可輕鬆操作電視功能。

開機（按一下）
關機[1]（按住）
選單控制（按下[2]）
選單選擇（按住[3]）

1) 所有操作中的應用程式將會關閉，令正在進行的所有錄影將會停止。（視乎銷售國家而定）
2) 您可以在電視開啓時按下按鈕，以存取及調整選單。
3) 當您存取調整選單時便可使用這功能。

注意

- 如電視從廠商運出後首次開啓，電視初始化可能需時數分鐘。
- 您電視的 OSD（螢幕顯示）可能與此手冊中顯示的內容略有不同。
- 裝置必須在容易接近插座的位置。有些裝置沒有開啓 / 關閉按鈕，需要拔除電源線才能關閉。

連接

將不同的外置裝置連接至電視，並切換輸入模式以選取外置裝置。有關外置裝置連接的詳情，請參閱個別裝置隨附的手冊。

HDMI

- 連接 HDMI 纜線時，產品和外部裝置應先關閉並將電源線拔除。
- 支援的 HDMI 音訊格式 （視型號而定）：
  True HD（48 kHz），
  Dolby Digital / Dolby Digital Plus（32 kHz / 44.1 kHz / 48 kHz），
  PCM（32 kHz / 44.1 kHz / 48 kHz / 96 kHz / 192 kHz）
  DTS（44.1 kHz / 48 kHz / 88.2 kHz / 96 kHz）
  DTS-HD（44.1 kHz / 48 kHz / 88.2 kHz / 96 kHz / 176.4 kHz / 192 kHz）

注意

- 如果連接到輸入的設備也支援 HDMI Deep Color，您的圖像會更清晰。不過，如果設備不支援，可能無法正常運作。如出現此情況，請將電視的 [HDMI Deep Color] 設定爲關閉。
- ⚙ → [⚙] → [一般] → [外部裝置] → [HDMI 設定] → [HDMI Deep Color]
- 使用附有 HDMI 標誌的獲認證的纜線。
- 如您並非使用獲認證的纜線，可能無法於螢幕顯示畫面，或發生連接錯誤。
- 建議的 HDMI 線類型
  - 超高速 HDMI®/™ 線 （3 米或以下）

USB

某些 USB 集線器可能不能運作。如連接至 USB 集線器的 USB 裝置未能被探測，可直接將裝置連接至於電視上的 USB 端口。

注意

- 爲了獲得最好的連接效果，HDMI 纜線和 USB 裝置接頭厚度應少於 10 毫米，寬度應少於 18 毫米。如果 USB 纜線或 USB 記憶卡與您的電視的 USB 端口尺寸不符，請使用支援 USB 2.0 的延長線。
  （視型號而定）

IR 發射器

使用 IR 發送器控制機頂盒 （纜線/衛星/IP/OTT），藍光/DVD 播放機，Soundbar，遊戲主機等等 。
（視乎銷售國家而定）

注意

- 將 IR 發送器纜線連接到電視的 IR 發送器連接埠。
- 使用通用控制設置控制裝置。
- 使用隨附的 3M 膠帶保護 IR 發射器。

外部裝置

可用的外置裝置爲：Blu-ray 播放器，HD 接收器，DVD 播放器，VCR，音效系統，USB 儲存裝置，電腦，遊戲裝置及其他外置裝置。

注意

- 外置裝置連接視乎型號而有所不同。
- 於電腦模式，可能產生由解像度，垂直格式，對比度或亮度引致的雜音。如出現雜訊，將電腦輸出變更爲其他解像度或將刷新率變更爲其他頻率，或於 [影像] 功能表中調整亮度和對比度，直至影像變爲清晰。
- 於電腦模式，部份解像度設定可能未能正常運作，視乎顯示卡而定。
- 如您在電腦上播放 Ultra HD 內容，視乎電腦性 能，視訊或音訊可能會間歇性中斷。（視型號而定）
- 連線至有線 LAN 時，請使用 CAT 7 高速網際網路傳輸線。（僅限提供 **LAN** 連接埠時。）

規格

電源要求	AC 100 – 240 V~ 50/60 Hz

- 能源標籤上標明的每年能源消耗是根據 IEC 62087 及香港能源效益標籤計劃 （EELS） 來計算。
- 實際的能源消耗取決於使用環境（觀看的內容，電視設定等）而定。

廣播規格		
	數碼訊號	類比訊號
電視制式	DTMB	PAL D/K，PAL I，NTSC-M
節目範圍	DTMB ：21~69	PAL D/K：VHF/UHF 1~69， CATV 1~47 PAL I：VHF/UHF 1~69， CATV 1~47 NTSC-M：VHF/UHF 2~78， CATV 1~71
外置天線抗阻		75 Ω

- 部份8K輸入/編碼格式可能不支援。或需要額外的設備才能支援部份8K格式。8K影像倍線及增強會因原始內容而有所不同。（視型號而定）

環境條件			
操作溫度	0 °C 至 40 °C	儲存溫度	-20 °C 至 60 °C
操作濕度	低於 80 %	儲存濕度	低於 85 %

掛牆安裝的情況	
傾斜角度	0° 至 15°

* 此規格僅適用於具有可調整的掛牆角度的產品。

- 如需有關電源供應和耗電量的詳細資訊，請參閱附貼在產品上的標籤。
  - 耗電量的測量標準以 IEC 62087 或每個國家／地區的能源法規爲依據。
    * 某些型號的標籤是貼在外部裝置連接端子外蓋內側。
    * 依各型號或國家／地區的規定，標籤上不一定會載明標準耗電量。

無線 LAN 模組（LGSBWAX12）規格	
無線 LAN （IEEE 802.11a/b/g/n/ac/ax）	
頻率範圍	輸出功率（最大）
2400 至 2483.5 MHz	17 dBm
5150 至 5725 MHz	15 dBm
5725 至 5850 MHz	13 dBm
Bluetooth	
頻率範圍	輸出功率（最大）
2400 至 2483.5 MHz	9 dBm

由於每個國家的波段頻道有所不同，用戶無法更改或調整操作頻率。本產品配置之頻率爲區域頻率表內。

爲用戶着想，建議本裝置安裝及使用時，應最少離用戶身體 20 厘米。

注意：開放來源程式碼軟件

欲獲得 GPL、LGPL、MPL 及其他有義務公開包含本產品內容原始程式授權的源代碼，及存取所有提及授權條款、版權聲明及其他相關文件，請瀏覽 *https://opensource.lge.com*。

LG Electronics 也可應您要求，在由您支付相關費用（如媒體成本、運費及處理費）的條件下以 CD-ROM 方式提供開放原始程式碼，如有需要請寄送電子郵件至 opensource@lge.com。

該產品最後一次出貨的三年內，任何收到此資訊的人可享此優惠。

授權

HDMI™
HIGH-DEFINITION MULTIMEDIA INTERFACE

QuickSet®
（僅限支援神奇遙控器的型號）

HEVC Advance™
Covered by patents at patentlist.accessadvance.com

疑難排解

在 TV / HDMI 輸入中，在遙控器上按 🔇 按鈕三次即可在螢幕上顯示機型名稱和序號。

無法使用遙控器控制電視。	• 請檢查產品上的遙控器感應器，然後再試一次。 • 請檢查產品和遙控器之間是否有任何障礙物。 • 請檢查電池是否仍可使用，且已正確安裝（⊕ 對 ⊕, ⊖ 對 ⊖）。
沒有畫面顯示或沒有聲音。	• 請檢查產品是否已開機。 • 請檢查電線是否已連接至牆上插頭。 • 請連接其他產品，確認牆上插頭是否有問題。
電視突然關機。	• 檢查電源控制設定。電源供應可能中斷。 • 檢查自動關閉功能是否在設定相關的時間啓動。 • 自動關閉功能可能已運作。此產品配備了自動關閉功能，會在遙控器未使用時間達 15 分鐘，即這段時間內無任何輸入訊息時，便會自動關閉。
連接到電腦（HDMI） 時，未偵測到任何訊號。	• 使用遙控器關閉/開啓電視。 • 重新連接 HDMI 纜線。 • 在開啓電視的情況下重新啓動電腦。
異常顯示情況	• 如接觸產品時感覺冰冷，於開啓時可能出現「跳線」情況。此爲正常情況，產品並無異常。 • 本屏幕是擁有數百萬像素的先進產品。微細黑點及/或高亮彩色光點（白色，紅色，藍或綠色）可能以每百萬分一單位出現於顯示屏幕上。此並不代表非正常運作及並不影響產品之性能及其可靠性。此現象亦會於第三方產品出現並不接受更換或退款。 • 於不同位置（左/右/上/下方）觀看時可能感受到屏幕不同亮度及顏色顯示。此現象的出現乃顯示屏幕的特性。此與產品性能無關，並其運作正常。 • 避免長時間接觸或以手指，握緊屏幕。否則，可能在螢幕上產生暫時的失真效應。
產生聲音	• 「咔噠」斷裂雜音：於觀看或關閉電視時出現的斷裂雜聲乃因溫度與濕度而導致塑料的熱收縮所產生。此等雜聲於遇熱膨脹之產品較爲常見。 • 電路嗡聲/屏幕訊噪：低水平雜音乃由高速切換電路以產生大量電流令產品運作時發出。其因應產品會有所不同。雜音之產生並不影響產品的性能及可靠性。
由於隨時待命模式操作，電視無法連續打開，或者沒有通過感應器自動打開。	• 動作感應器位於電視底部中心。 • 僅部分型號支援動作感應器。 • 如果動作感應器上有異物，它可能無法正常工作。 • 如果電視周圍的環境太亮或太暗，動作感應器可能無法正常工作。 • 電視機前的障礙物可能會影響動作感應器的檢測功能。 • 它可以通過識別電視周圍照明的變化或物體（寵物/機器人吸塵器等）的移動來進行操作。 • 要在 ⚙ → [⚙] → [一般] → [隨時待命] → [啓用功能]中停止使用隨時待命模式，或僅使用常規隨時待命模式功能，您可以選擇啓用隨時待命模式，轉動關閉屏幕，然後在 [隨時待命 設定] 中停止使用動作感應器。通過 [隨時待命 設定] → [動作感應器敏感度] 設置調整感應器的性能，可以設置帶有動作感應器的屏幕開啓功能。

⚠

- 確保擰乾布上多餘的水分及清潔劑。
- 切勿直接在電視螢幕上噴水或清潔劑。
- 請只在乾布上噴上適度的水或清潔劑以擦拭螢幕。

保護 OLED TV 螢幕的注意事項

OLED TV 和一般的 LED/LCD 不同，它所產生的影像會爲每個像素發光，從而獲得完美的黑色，提供清晰的影像而不變模糊。

鑑於用於獲得高解像度影像品質的有機材料性質的影響，OLED 顯示器通常會在畫面上出現影像殘留，而且這是一種持續的現象。在所有 OLED 顯示面板中都可發現到此現象，而雖然所建議的影像模式可將影像殘留減到最低，目前的技術仍無法完全防止此情況的發生。

長時間顯示相同影像或重複顯示相同影像，均會造成畫面上出現影像殘留的情況。因產品性質使然，這在 OLED 顯示面板產品是常見的現象。本產品具備內建螢幕保護功能。爲避免顯示可能造成影像殘留的影像，請遵循以下建議事項。

可能造成影像殘留的影像

- 影像在螢幕頂部與底部及/或左右兩側出現黑色區域。
- 影像的畫面比例爲 4:3 或 21:9。
- 影像長時間固定不動，例如頻道號碼、電視台標誌、遊戲主機圖示、機頂盒選單等。
- 其他固定的畫面影像或重複顯示的影像。

執行 [像素清除] 以保護 OLED TV 螢幕

OLED TV 配備像素清理功能，可自行檢查螢幕狀態，避免影像在螢幕上停留的影像殘留現象。此功能會自動從累計觀看時間計算最佳執行時間，並且會在電視關閉後自動執行。在執行此功能的同時，螢幕頂部和底部會出現平行線。當此產品連接電源線和主電源時，像素清除功能便會開始運作。

- 要手動執行此功能，請在遙控器上按 ⚙ 按鈕，移至 [⚙] → [影像] → [選擇模式]，將模式設爲 [Eco]，然後移至 [進階設定] → [亮度]，並將 [OLED 像素亮度] 設爲低亮度。此外，在遙控器上按 ⚙ 按鈕，移至 [⚙] → [一般] → [OLED Care] → [OLED 屏幕照護]，然後將 [調整標誌亮度] 值設爲 [高]。

若螢幕的上/下/左/右側顯示黑色條狀影像時，請在遙控器上按 ⚙ 按鈕，按下 [⚙]，然後移至 [影像] → [畫面比例] → [用戶選擇] → [垂直縮放] 或 [4 向縮放] 以移除黑色條狀影像。

關閉用於設定裝置的選單如機頂盒，如此才不會在螢幕上長時間顯示。

將影像殘留減到最低的建議

長時間觀看電視時，請在遙控器上按 ⚙ 按鈕，移至 [⚙] → [影像] → [選擇模式]，將模式設爲 [Eco]，然後移至 [進階設定] → [亮度]，並將 [OLED 像素亮度] 設爲低亮度。此外，在遙控器上按 ⚙ 按鈕，移至 [⚙] → [一般] → [OLED Care] → [OLED 屏幕照護]，然後將 [調整標誌亮度] 值設爲 [高]。

若螢幕的上/下/左/右側顯示黑色條狀影像時，請在遙控器上按 ⚙ 按鈕，按下 [⚙]，然後移至 [影像] → [畫面比例] → [用戶選擇] → [垂直縮放] 或 [4 向縮放] 以移除黑色條狀影像。

關閉用於設定裝置的選單如機頂盒，如此才不會在螢幕上長時間顯示。

注意

- 當螢幕長時間顯示同一幅固定圖像時，螢幕亮度會被自動調暗並在更換圖像時還原。這是用來減低殘留影像的正常功能。

法規

警告! （穩定性危害）

因爲電視機可能會掉落並導致嚴重個人傷害及傷亡。只要採取下列預防工作便可避免傷害事故發生（特別是兒童傷害）：

- 一律使用電視機製造商建議的櫃子或支架或安裝方法。
- 一律選用可安全支撐電視機的家具。
- 一律確保電視機不會懸在支撐家具的邊沿。
- 一律告訴兒童爬上家具觸碰電視機或其控制器的危險性。
- 一律將連接電視的電源線和電纜佈置整齊，以免出現絆倒、拉扯或抓住情況。
- 切勿將電視機置於搖晃不穩的位置。
- 切勿將電視機置放在家具高處（如櫥櫃或書架），除非以適當的支撐物固定家具和電視機。
- 切勿在電視機和支撐家具之間夾置布料或其他材料。
- 切勿在電視機上或在支撐電視機的家具上擺放可能誘使兒童攀爬的物品，例如玩具和搖控器。

無論是要電視機繼續放置原位或改放到其他地方，請務必採用上述建議。

符號

～	AC 代表交流電。
⎓	DC 代表直流電。
⧈	代表第二級設備。
⏻	代表待機。
|	代表「開啓」（電源）。
ϟ	代表危險電壓。

ENGLISH

www.lg.com

Copyright © 2023 LG Electronics Inc.
All Rights Reserved.

LG OLED TV

OWNER'S MANUAL

Safety and Reference

Please read this manual carefully before operating your set and retain it for future reference.

The model and serial number of the product are located on the back and on one side of the product. Record them below in case you ever need service.

Model _____

Serial No. _____

Before reading this manual

- Read this manual thoroughly before operating your TV, and keep it for future reference.
- On the website you can download the manual including installation, using, troubleshooting, specifications, license etc and view its contents on your PC or mobile device.
- **User Guide :** For more information about this TV, read the USER GUIDE embedded in the product. (Depending on model)
  - To open the USER GUIDE ⚙ → [⚙] → [Support] → [User Guide]

Separate Purchase

- Separate purchase items can be changed or modified for quality improvement without any notification. Contact your dealer to buy these items. These devices only work with certain models.
- The model name or design may be changed depending on the upgrade of product functions, manufacturer's circumstances or policies.
- A cable to connect antennas and external devices must be purchased separately.

Note

- Product specifications or contents of this manual may be changed without prior notice due to upgrade of product functions.
- The items supplied with your product may vary depending on the model.
- Image shown may differ from your TV.

Warning! Safety instructions

CAUTION
RISK OF ELECTRIC SHOCK
DO NOT OPEN

CAUTION : TO REDUCE THE RISK OF ELECTRIC SHOCK, DO NOT REMOVE COVER (OR BACK). NO USER-SERVICEABLE PARTS INSIDE. REFER TO QUALIFIED SERVICE PERSONNEL.

This symbol is intended to alert the user to the presence of uninsulated "dangerous voltage" within the product's enclosure that may be of sufficient magnitude to constitute a risk of electric shock to persons.

This symbol is intended to alert the user to the presence of important operating and maintenance (servicing) instructions in the literature accompanying the appliance.

WARNING : TO REDUCE THE RISK OF FIRE AND ELECTRIC SHOCK, DO NOT EXPOSE THIS PRODUCT TO RAIN OR MOISTURE.

- TO PREVENT THE SPREAD OF FIRE, KEEP CANDLES OR OTHER ITEMS WITH OPEN FLAMES AWAY FROM THIS PRODUCT AT ALL TIMES.
- **Do not place the TV and/or remote control in the following environments:**
  - Keep the product away from direct sunlight.
  - An area with high humidity such as a bathroom.
  - Near any heat source such as stoves and other devices that produce heat.
  - Near kitchen counters or humidifiers where they can easily be exposed to steam or oil.
  - An area exposed to rain or wind.
  - Do not expose to dripping or splashing and do not place objects filled with liquids, such as vases, cups, etc. on or over the apparatus (e.g., on shelves above the unit).
  - Near flammable objects such as gasoline or candles, or expose the TV to direct air conditioning.
  - Do not install in excessively dusty places.

  Otherwise, this may result in fire, electric shock, combustion/explosion, malfunction or product deformation.
- **Ventilation**
  - Install your TV where there is proper ventilation. Do not install in a confined space such as a bookcase.
  - Do not install the product on a carpet or cushion.
  - Do not block or cover the product with cloth or other materials while unit is plugged in.
- Take care not to touch the ventilation openings. When watching the TV for a long period, the ventilation openings may become hot.

- Protect the power cord from physical or mechanical abuse, such as being twisted, kinked, pinched, closed in a door, or walked upon. Pay particular attention to plugs, wall outlets, and the point where the cord exits the device.
- Do not move the TV whilst the Power cord is plugged in.
- Do not use a damaged or loosely fitting power cord.
- Be sure to grasp the plug when unplugging the power cord. Do not pull on the power cord to unplug the TV.
- Do not connect too many devices to the same AC power outlet as this could result in fire or electric shock.
- **Disconnecting the Device from the Main Power**
  - The power plug is the disconnecting device. In case of an emergency, the power plug must remain readily accessible.
- Do not let your children climb or cling onto the TV. Otherwise, the TV may fall over, which may cause serious injury.
- **Outdoor Antenna Grounding** (Can differ by country):
  - If an outdoor antenna is installed, follow the precautions below. An outdoor antenna system should not be located in the vicinity of overhead power lines or other electric light or power circuits, or where it can come in contact with such power lines or circuits as death or serious injury can occur.
- Never touch this apparatus or antenna during a lightning storm. You may be electrocuted.
- Make sure the power cord is connected securely to the TV and wall socket if not secured damage to the Plug and socket may occur and in extreme cases a fire may break out.
- Do not insert metallic or inflammable objects into the product. If a foreign object is dropped into the product, unplug the power cord and contact the customer service.
- Do not touch the end of the power cord while it is plugged in. You may be electrocuted.
- **If any of the following occur, unplug the product immediately and contact your local customer service.**
  - The product has been damaged.
  - If water or another substance enters the product (like an AC adapter, power cord, or TV).
  - If you smell smoke or other odors coming from the TV.
  - When lightning storms or when unused for long periods of time.

  Even the TV is turned off by remote control or button, AC power source is connected to the unit if not unplugged in.
- Do not use high voltage electrical equipment near the TV (e.g., a bug zapper). This may result in product malfunction.
- Do not attempt to modify this product in any way without written authorization from LG Electronics. Accidental fire or electric shock can occur. Contact your local customer service for service or repair. Unauthorized modification could void the user's authority to operate this product.
- Use only an authorized attachments / accessories approved by LG Electronics. Otherwise, this may result in fire, electric shock, malfunction, or product damage.
- Never disassemble the AC adapter or power cord. This may result in fire or electric shock.
- Handle the adapter carefully to avoid dropping or striking it. An impact could damage the adapter.
- To reduce the risk of fire or electrical shock, do not touch the TV with wet hands. If the power cord prongs are wet or covered with dust, dry the power plug completely or wipe dust off.
- **Batteries**
  - Store the accessories (battery, etc.) in a safe location out of the reach of children.
  - Do not short circuit, disassemble, or allow the batteries to overheat. Do not dispose of batteries in a fire. Batteries should not be exposed to excessive heat.
  - Caution : Risk of fire or explosion if the battery is replaced by an incorrect type.
- **Moving**
  - When moving, make sure the product is turned off, unplugged, and all cables have been removed. It may take 2 or more people to carry larger TVs. Do not press or put stress on the front panel of the TV. Otherwise, this may result in product damage, fire hazard or injury.
- Keep the packing anti-moisture material or vinyl packing out of the reach of children.
- Do not allow an impact shock, any objects to fall into the product, and do not drop anything onto the screen.
- Do not press strongly upon the panel with a hand or a sharp object such as a nail, pencil, or pen, or make a scratch on it. It may cause damage to screen.
- **Cleaning**
  - When cleaning, unplug the power cord and wipe gently with a soft/dry cloth. Do not spray water or other liquids directly on the TV. Do not clean your TV with chemicals including glass cleaner, any type of air freshener, insecticide, lubricants, wax (car, industrial), abrasive, thinner, benzene, alcohol etc., which can damage the product and/or its panel. Otherwise, this may result in electric shock or product damage.

Installation

Lifting and moving the TV

Please note the following advice to prevent the TV from being scratched or damaged and for safe transportation regardless of its type and size.

- It is recommended to move the TV in the box or packing material that the TV originally came in.
- Before moving or lifting the TV, disconnect the power cord and all cables.
- When holding the TV, the screen should face away from you to avoid damage.
- Hold the side and bottom of the TV frame firmly. Make sure not to hold the transparent part, speaker, or speaker grill area.
- When transporting a large TV, there should be at least 2 people.
- When transporting the TV by hand, hold the TV as shown in the following illustration.
- When transporting the TV, do not expose the TV to jolts or excessive vibration.
- When transporting the TV, keep the TV upright, never turn the TV on its side or tilt towards the left or right.
- Do not apply excessive pressure to cause flexing / bending of frame chassis as it may damage screen.
- When handling the TV, be careful not to damage the protruding buttons.

⚠

- Avoid touching the screen at all times, as this may result in damage to the screen.
- When attaching the stand to the TV set, place the screen facing down on a cushioned table or flat surface to protect the screen from scratches.

Mounting on the Table

1 Lift and tilt the TV into its upright position on a table.
   - Leave a 10 cm (minimum) space from the wall for proper ventilation. (Depending on model)

2 Connect the power cord to a wall outlet.

⚠

- Do not apply foreign substances (oils, lubricants, etc.) to the screw parts when assembling the product. (Doing so may damage the product.)
- Do not use any unapproved items to ensure the safety and product life span.
- Any damage or injuries caused by using unapproved items are not covered by the manufacturer's warranty.
- If you install the TV on a stand, you need to take actions to prevent the product from overturning. Otherwise, the product may fall over, which may cause injury.
- When assembling the stand, ensure that all of the provided screws are attached. If the screws are not fully tightened, the product may tilt or tip over, resulting in damage. Tightening the screws with excessive force may cause them to come off due to abrasion of the screw joint.
- When installing on a cabinet or a shelf using a stand, make sure its width is greater than that of the TV. (Depending on model)
- If the TV is placed on the stand, its screen may be tilted back slightly. If the stand is not level because an object is placed under the stand or it is not on a flat surface, the product may fall and cause injury or product damage. (Depending on model)

Securing TV to the Wall

1 Insert and tighten the eye-bolts, or TV brackets and bolts on the back of the TV.
   - If there are bolts inserted at the eye-bolts position, remove the bolts first.

2 Mount the wall brackets with the bolts to the wall. Match the location of the wall bracket and the eye-bolts on the rear of the TV.

3 Connect the eye-bolts and wall brackets tightly with a sturdy rope. Make sure to keep the rope horizontal with the flat surface.

- Use a platform or cabinet that is strong and large enough to support the TV securely.
- Brackets, bolts and ropes are not provided. You can obtain additional accessories from your local dealer.

Stand (Separate Purchase)

(Depending on model)

Stand	Model
SR-G3WU55	OLED55G3*
SR-G3WU65	OLED65G3*
SR-G3WU8377	OLED77/83G3*

Mounting to the Wall

Attach an optional wall mount bracket at the rear of the TV carefully and install the wall mount bracket on a solid wall perpendicular to the floor. When you attach the TV to other building materials, please contact qualified personnel. LG recommends that wall mounting be performed by a qualified professional installer. We recommend the use of LG's wall mount bracket. LG's wall mount bracket is easy to move with cables connected. When you do not use LG's wall mount bracket, please use a wall mount bracket where the device is adequately secured to the wall with enough space to allow connectivity to external devices. It is advised to connect all the cables before installing fixed wall mounts.

⚠

- Remove the stand before installing the TV on a wall mount by performing the stand attachment in reverse.
- For more information of screws and wall mount bracket, refer to the Separate purchase.
- If you intend to mount the product to a wall, attach VESA standard mounting interface (optional parts) to the back of the product. When you install the set to use the wall mounting bracket (optional parts), fix it carefully so as not to drop.
- When mounting a TV on the wall, make sure not to install the TV by hanging the power and signal cables on the back of the TV.
- Do not install this product on a wall if it could be exposed to oil or oil mist. This may damage the product and cause it to fall.
- When installing the Full Contact Wall Mount, the TV may not be contacted firmly against the wall due to some wall conditions.

Precautions for Safety

(Except for OLW480B, LSW440B)

- Professional installers should read this manual carefully to ensure proper installation.
- Professional installers should forward this manual to customers after installation and encourage them to read and store it in a convenient place for future reference.

  After reading the installation manual, keep it in a convenient place for future reference.

⚠

- Ask a professional installer appointed by the store for installation of the product.

  Installation by someone other than a professional installer is extremely dangerous and may result in personal injury.
- Do not install the product in an unstable site that cannot withstand its weight.

  If the installation site lacks sufficient rigidity, the product may fall and cause personal injury.
- Contact a professional installer appointed by the store prior to moving or replacing the product after installation.

  Installation is a technical task and safety issues may arise if an individual attempts to install or move the product personally.
- Do not hang on the product or subject it to severe impact after installation.

  Doing so may cause the product to fall and cause personal injury.
- When installing the product on a wall, do not hang the power line or signal cables from the back of the TV.

  This can damage the cords, resulting in a fire, electrical shock or malfunction of the product.
- Be sure to wear work gloves when installing the product.
  - Installing with unprotected hands may result in injury.
- Install the product according to the instructions in the installation manual.

  Failure to install the product according to the instructions in the installation manual can result in serious personal injury or product damage.
- Be sure to have at least two people when installing the product or adjusting the product's height.

  Attempting to perform installation or adjustments personally may result in personal injury or damage to the product.
- Make sure a wall is available prior to proceeding with installation. Make use of the anchors and screws provided with the product.

  Use of any unauthorized anchors or screws may not support the product's weight, which poses safety risks.
- When drilling in the wall for installation, be sure to use drill bits and drills of the specified diameter. Follow the instructions for the hole depth.

  Drilling and installing the product in ways other than specified in the installation manual may result in an unstable installation and potential safety issues.
- Do not wipe the product with a wet towel or use any heating equipment or humidifier under the place where the product is installed.

  Liquid water or vapor may enter the product and excessive heat may cause fire, electric shock, or malfunction.
- Do not install the product near a fire sprinkler or detector, a place where vibration or shock may occur or near a high-voltage wire or power source.
- Unplug the product's power cord from the wall outlet before installing.

  Installing the product while the power cord is plugged in may result in electric shock or fire.
- Do not install the product with bare hands. Be sure to wear work gloves.

  Attempting installation without work gloves may cause personal injury.
- Connect the product with the supplied cable. Use of an unauthorized cable may result in damage by friction with the wall. Make sure to use the supplied cable gender. (This may vary by model.)

Before Installation

(Except for OLW480B, LSW440B)

- Do not use the product for any purpose other than installing the TV on a wall.
- Avoid product damage and safety accidents caused by careless installing or use of improper or unauthorized wall mount.
- Follow the instructions in the installation manual for a convenient installation of the wall mount.
- Immediately discontinue installation and contact the service centre if you cannot fully understand the installation process.

  Use a professional installer if any installation issues remain after the inquiry.
- Installation of this product on a concrete wall or wood stud is recommended. Installation of this product on other surfaces (Dry wall, plywood, bricks, etc.) is not recommended. Improper installation may result in the product falling.
- Install the product only on a vertical wall.

  Do not install on a tilted wall that exceeds building standards or on the heavily titled wall or ceiling.

  LG is not responsible for problems caused by improper installation of the product, e.g., heavily tilted walls and ceilings.
- Check the enclosed accessories before installation. We are not responsible for any lost or damaged accessories after the inner packaging is opened.
- When an infant or small child swallows the enclosed accessories, various safety accidents such as choking may occur. Keep the enclosed accessories out of the reach of infants and children.
- When tightening screws, tighten until fully snug.

  Avoid using excessive force when tightening the screws. Doing so may damage the wall and product or reduce the rigidity or performance of the product.
- Avoid installing a TV that exceeds the specified tensile load, and do not allow any external force to be applied to the product.
- Avoid accidents by using work tools with care during installation.

Tools for Installation

- "+" shaped screwdriver (manual or electric) / level / drill / Ø 8 mm drill bit for concrete or Ø 4 mm drill bit for steel

Securing TV to the Wall

(Except for OLW480B, LSW440B)

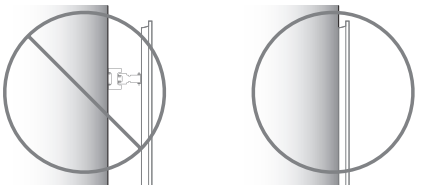

- Please use the TV close to the wall after installation.

How to fix anchors and screws

(Except for OLW480B, LSW440B)

Please make sure that:

- Check that the material and thickness of the wall and finishing material comply with the installation manual. Before beginning the mounting process, you must be sure the wall is able to support the weight of the TV.
- Should use the enclosed anchors and screws on crack-free concrete walls.
- Never install the product on a plasterboard or wall made of paper or medium-density fiberboard (MDF). When it is necessary to install the product on such wall, anchor screws must be fastened to retaining walls (concrete) or wood Stud inside the finishing material.
- The wall mount should be attached to a stud. This usually will not be a problem, but depending on individual circumstances, there may be cases when the ability to mount into a stud is not possible. In this case, there are a variety of drywall anchors, such as toggle bolts, which may provide a solution. If using drywall anchors, please be sure the anchors and the wall have the ability to support the weight of your TV. Please note that the supplied anchors may not be the correct ones for your individual situation, so you should check with a local professional.
- Other unspecified walls must be capable of supporting pullout loads of over 70 kgf (686 N) and shear loads of over 100 kgf (980 N) per fastener.
- Use an Ø 8 mm drill bit for concrete and a hammer (impact) drill or Ø 4 mm drill bit for wood stud to drill holes.

For installation on concrete wall

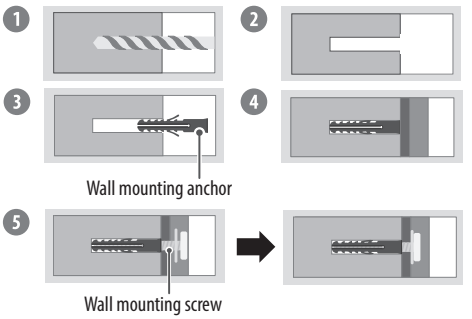

1 Drill holes in anchor locations with a drill bit of Ø 8 mm to a depth of 80 mm to 100 mm.
2 Clean the drilled holes.
3 Insert the enclosed anchors for fixing the wall mount into the holes. (Use a hammer when inserting anchors.)
4 Push the wall mount support closely toward the wall to match the hole locations.
5 Tighten screws for fixing the wall mount to the holes. At this time, tighten the screws to a torque of between 45 kgf/cm to 60 kgf/cm.

For installation on wood stud

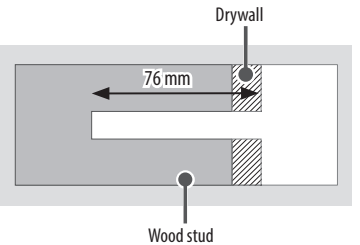

Use the Ø 4 mm drill bit for wood to drill holes with the depth of 76 mm. (Clean the drilled hole.)

Without using the wall mounting anchor, fasten the wall mounting screw directly to the wood stud.

After Installation

- When connecting additional cables from the sides, we recommend holding the centre of the TV horizontally or vertically and pulling the product to make sure there is sufficient distance from the wall before connecting.
- When connecting additional cables from the bottom, we recommend releasing the TV from the wall mount before connecting.

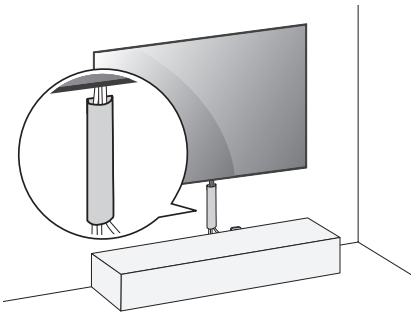

(For example)

- Use cable management systems to arrange the cables at the bottom of the TV as shown below. Cable managements are not provided with the product, so purchase them separately.
- After installing the product, be sure to use it adhered to the wall.
  - Using the product while it is not adhered to the wall may damage or shake the product.
- Do not use a sharp object when you detached the cable cover. This could damage the cable or the cabinet. It may also cause personal harm. (Depending on model)

Antenna/Cable

Connect the TV to a wall antenna socket with an RF cable (75 Ω).

- Use a signal splitter to use more than 2 TVs.
- If the image quality is poor, install a signal amplifier properly to improve the image quality.
- If the image quality is poor with an antenna connected, try to realign the antenna in the correct direction.
- An antenna cable and converter are not supplied.
- For a location that is not supported with Ultra HD broadcasting, this TV cannot receive Ultra HD broadcasts directly.

Starting TV

Turning on the TV

You can simply operate the TV functions, using the button.

Power On (Press)
Power Off[1] (Press and Hold)
Menu Control (Press[2])
Menu Selection (Press and Hold[3])

1) All running apps will close, and any recording in progress will stop. (Depending on country)
2) You can access and adjust the menu by pressing the button when TV is on.
3) You can use the function when you access menu control.

Note

- If the TV is turned on for the first time after it was shipped from the factory, initialization of the TV may take a few minutes.
- Your TV's OSD (On Screen Display) may differ slightly from that shown in this manual.
- The device must be easily accessed to a location outlet near the access. Some devices are not made by turning on / off button, turning off the device and unplugging the power cord.

Connections

Connect various external devices to the TV and switch input modes to select an external device. For more information of external device's connection, refer to the manual provided with each device.

HDMI

- When connecting the HDMI cable, the product and external devices should be turned off and unplugged.
- Supported HDMI Audio format (Depending on model):
  True HD (48 kHz),
  Dolby Digital / Dolby Digital Plus (32 kHz / 44.1 kHz / 48 kHz),
  PCM (32 kHz / 44.1 kHz / 48 kHz / 96 kHz / 192 kHz)
  DTS (44.1 kHz / 48 kHz / 88.2 kHz / 96 kHz)
  DTS-HD (44.1 kHz / 48 kHz / 88.2 kHz / 96 kHz / 176.4 kHz / 192 kHz)

Note

- If the device connected to Input Port also supports HDMI Deep Colour, your picture may be clearer. However, if the device doesn't support it, it may not work properly. In that case, change the TV's [HDMI Deep Colour] setting to off.
- ⚙ → [⚙] → [General] → [External Devices] → [HDMI Settings] → [HDMI Deep Colour]
- Use a certified cable with the HDMI logo attached.
- If you do not use a certified HDMI cable, the screen may not display or a connection error may occur.
- Recommended HDMI Cable Types
  - Ultra High Speed HDMI®/™ cable (3 m or less)

USB

Some USB Hubs may not work. If a USB device connected using a USB Hub is not detected, connect it to the USB port on the TV directly.

Note

- For an optimal connection, HDMI cables and USB devices should have bezels less than 10 mm thick and 18 mm width. Use an extension cable that supports USB 2.0 if the USB cable or USB memory stick does not fit into your TV's USB port. (Depending on model)

IR Blaster

Control the set-top box (cable/satellite/IP/OTT), Blu-ray/DVD player, soundbar, game consoles, etc., using the IR Blaster. (Depending on country)

Note

- Connect the IR Blaster cable to the TV's IR Blaster port.
- Use universal control settings to control the device.
- Secure the IR Blaster with the 3M tape provided.

External Devices

Available external devices are: Blu-ray player, HD receivers, DVD players, VCRs, audio systems, USB storage devices, PC, gaming devices, and other external devices.

Note

- The external device connection may differ from the model.
- In PC mode, there may be noise associated with the resolution, vertical pattern, contrast or brightness. If noise is present, change the PC output to another resolution, change the refresh rate to another rate or adjust the brightness and contrast on the [Picture] menu until the picture is clear.
- In PC mode, some resolution settings may not work properly depending on the graphics card.
- If ULTRA HD content is played on your PC, video or audio may become disrupted intermittently depending on your PC's performance. (Depending on model)
- When connecting to a wired LAN, use a CAT 7 cable with high-speed Internet transmission. (Only when **LAN** port is provided.)

Specifications

Power requirement	AC 100-240 V~ 50/60 Hz

- The annual energy consumption indicated on the energy label is measured in accordance with IEC 62087 and the Hong Kong Energy Efficiency Labelling Scheme (EELS).
- The actual energy consumption depends on the usage environment (the content watched, TV settings, etc.).

Broadcasting Specifications		
	Digital TV	Analogue TV
Television system	DTMB	PAL D/K, PAL I, NTSC-M
Programme coverage	DTMB: 21~69	PAL D/K: VHF/UHF 1~69, CATV 1~47 PAL I: VHF/UHF 1~69, CATV 1~47 NTSC-M: VHF/UHF 2~78, CATV 1~71
External antenna impedance	75 Ω	

- Certain 8K input/decoding standards may not be supported. An additional device may be necessary to support certain 8K standards. Upscaled and enhanced 8K images will vary depending on the source content. (Depending on model)

Environment Condition			
Operating Temperature	0 °C to 40 °C	Storage Temperature	-20 °C to 60 °C
Operating Humidity	Less than 80 %	Storage Humidity	Less than 85 %

Conditions for Wall Mount Installation	
Tilt Angle	0° - 15°

* This specification applies only to products with an adjustable wall mount angle.

- For information of the power supply and power consumption, refer to the label attached to the product.
  - The typical power consumption is measured in accordance with IEC 62087 or each country's energy regulations.
    - * On some models, the label is inside the external device connection terminal cover.
    - * Depending on the model or country, the typical power consumption may not be on label.

Product Information

Wireless module(LGSBWAX12)Specifications	
Wireless LAN (IEEE 802.11a/b/g/n/ac/ax)	
Frequency range	Output Power (Max.)
2,400 to 2,483.5 MHz	17 dBm
5,150 to 5,725 MHz	15 dBm
5,725 to 5,850 MHz	13 dBm
Bluetooth	
Frequency range	Output Power (Max.)
2,400 to 2,483.5 MHz	9 dBm

As band channels can vary per country, the user cannot change or adjust the operating frequency. This product is configured for the regional frequency table.

For consideration of the user, this device should be installed and operated with a minimum distance of 20 cm between the device and the body.

Open Source Software Notice Information

To obtain the source code that is contained in this product, under GPL, LGPL, MPL, and other open source licenses that have the obligation to disclose source code, and to access all referred license terms, copyright notices and other relevant documents please visit *https://opensource.lge.com*.

LG Electronics will also provide open source code to you on CD-ROM for a charge covering the cost of performing such distribution (such as the cost of media, shipping, and handling) upon email request to opensource@lge.com.

This offer is valid to anyone in receipt of this information for a period of three years after our last shipment of this product.

Licenses

HDMI™
HIGH-DEFINITION MULTIMEDIA INTERFACE

QuickSet®
(Magic Remote supported models only)

HEVC Advance™
Covered by patents at patentlist.accessadvance.com

Troubleshooting

In TV / HDMI input, press the button on the remote control three times to display the model name and serial number on the screen.

Cannot control the TV with the remote control.	• Check the remote control sensor on the product and try again. • Check if there is any obstacle between the product and the remote control. • Check if the batteries are still working and properly installed (⊕ to ⊕, ⊖ to ⊖).
No image display and no sound is produced.	• Check if the product is turned on. • Check if the power cord is connected to a wall outlet. • Check if there is a problem in the wall outlet by connecting other products.
The TV turns off suddenly.	• Check the power control settings. The power supply may be interrupted. • Check if the auto-off function is activated on the settings related time. • The auto-off function may have worked. This product is equipped with an auto-off function that automatically turns off the power if the remote control is not used for 15 minutes without an input signal.
When connecting to the PC (HDMI), no signal is detected.	• Turn the TV off/on using the remote control. • Reconnect the HDMI cable. • Restart the PC with the TV on.
Abnormal Display	• If the product feels cold to the touch, there may be a small "flicker" when it is turned on. This is normal, there is nothing wrong with product. • This panel is an advanced product that contains millions of pixels. You may see tiny black dots and/or brightly coloured dots (white, red, blue or green) at a size of 1 ppm on the panel. This does not indicate a malfunction and does not affect the performance and reliability of the product. This phenomenon also occurs in third-party products and is not subject to exchange or refund. • You may find different brightness and colour of the panel depending on your viewing position(left/right/top/down). This phenomenon occurs due to the characteristic of the panel. It is not related with the product performance, and it is not malfunction. • Avoid touching the screen or holding your finger(s) against it for long periods of time. Doing so may produce some temporary distortion effects on the screen.
Generated Sound	• **"Cracking" noise**: A cracking noise that occurs when watching or turning off the TV is generated by plastic thermal contraction due to temperature and humidity. This noise is common for products where thermal deformation is required. • **Electrical circuit humming/panel buzzing**: A low level noise is generated from a high-speed switching circuit, which supplies a large amount of current to operate a product. It varies depending on the product. This generated sound does not affect the performance and reliability of the product.
The TV does not turn on continuously due to Always Ready mode operation or does not automatically turn on by sensor.	• The motion sensor is located on the bottom centre of the TV. • The motion sensor is only supported by some models. • If there is a foreign substance on the motion sensor, it may not work properly. • If the environment around the TV is too bright or too dark, the motion sensor may not work properly. • Obstacles in front of the TV may affect the detection function of the motion sensor. • It can operate by recognising changes in lighting around the TV or movement of objects (pets/robot vacuum cleaners, etc.). • To stop using the Always Ready mode in ⚙ → [⚙] → [General] → [Always Ready] → [Enable the function], or to use only the General Always Ready mode function, you can select Enable Always Ready mode, turn off the screen, and then stop using the motion sensor in [Always Ready Settings]. The screen-on function with the motion sensor can be set by adjusting the performance of the sensor through the [Always Ready Settings] → [Motion Sensor Sensitivity] setting.

⚠

- Make sure to wring any excess water or cleaner from the cloth.
- Do not spray water or cleaner directly onto the TV screen.
- Make sure to spray just enough of water or cleaner onto a dry cloth to wipe the screen.

Precautions for Protecting the OLED TV Screen

Unlike regular LED/LCDs, OLED TVs produce images that emit light for each pixel, achieving a perfect black colour and delivering clear images without blurring.

Due to the nature of the organic materials used to achieve high-resolution image quality, OLED displays generally experience image retention on the screen, which can be a persistent phenomenon. This phenomenon is observed in all OLED panels, and although recommended picture modes can minimise image retention, current technology cannot completely prevent this from occurring.

Displaying the same image for a long time or repeatedly displaying the same image can cause image retention on the screen, which is a common phenomenon in OLED panel products due to the nature of the product. This product has a built-in screen protection feature. Avoid displaying images that are likely to cause image retention, and follow the recommendations.

Images that are likely to cause image retention

- Images with black areas on the top and bottom and/or the left and right sides of the screen.
- Images whose aspect ratio is 4:3 or 21:9.
- Images that are fixed for a long time, such as program number, station logo, game console icon, set-top box menu, etc.
- Other fixed screen images or repeatedly displayed images.

Running [Pixel Cleaning] to Protect the OLED TV Screen

The OLED TV is equipped with a pixel cleaning feature to check the status of the screen by itself and prevent image retention that leaves an image on a screen. This feature automatically calculates the optimal execution time based on the accumulated viewing time and is automatically executed when the TV is turned off. While this feature is running, horizontal lines may appear at the top and bottom of the screen. The pixel cleaning feature works when the product is connected to the power cord and main power.

- To run this function manually, press the button on the remote control, go to [] → [General] → [OLED Care] → [OLED Panel Care] and press [Pixel Cleaning].

Recommendations for Minimising Image Retention

When watching the TV for a long time, press the button on the remote control, go to [] → [Picture] → [Select Mode] and set the mode to [Eco], go to [Advanced Settings] → [Brightness] and set [OLED Pixel Brightness] to a lower level. In addition, press the button on the remote control, go to [] → [General] → [OLED Care] → [OLED Panel Care] and set the [Adjust Logo Brightness] value to [High].

When showing images with black bars at the top/bottom/left/right side of the screen, press the button on the remote control, press [], and go to [Picture] → [Aspect Ratio] → [User Selection] → [Vertical Zoom] or [4-Way Zoom] to remove the black bars.

Turn off the menus for setting up devices such as set-top boxes so that they are not displayed on the screen for a long time.

Note

- When the screen is showing one fixed image for a long time, the screen brightness will be automatically reduced and then restored once the screen content changes. This is a normal function to minimise image retention.

Regulatory

WARNING! (STABILITY HAZARD)

A television set may fall, causing serious personal injury or death. Many injuries, particularly to children, can be avoided by taking simple precautions such as:

- ALWAYS use cabinets or stands or mounting methods recommended by the manufacturer of the television set.
- ALWAYS use furniture that can safely support the television set.
- ALWAYS ensure the television set is not overhanging the edge of the supporting furniture.
- ALWAYS educate children about the dangers of climbing on furniture to reach the television set or its controls.
- ALWAYS route cords and cables connected to your television so they cannot be tripped over, pulled or grabbed.
- NEVER place a television set in an unstable location.
- NEVER place the television set on tall furniture (for example, cupboards or bookcases) without anchoring both the furniture and the television set to a suitable support.
- NEVER place the television set on cloth or other materials that may be located between the television set and supporting furniture.
- NEVER place items that might tempt children to climb, such as toys and remote controls, on the top of the television or furniture on which the television is placed.

If the existing television set is going to be retained and relocated, the same considerations as above should be applied.

Symbols

~	Refers to alternating current (AC).
⎓	Refers to direct current (DC).
⧈	Refers to class II equipment.
⏻	Refers to stand-by.
|	Refers to "ON" (power).
ϟ	Refers to dangerous voltage.