LG
Life's Good

OWNER'S MANUAL

# Mini Hi-Fi System

Please read this manual carefully before operating your set and retain it for future reference.

MODEL
CM9960 (CM9960, CMS9960F)

*MFL69365145*

www.lg.com

# Safety Information

**CAUTION**

**RISK OF ELECTRIC SHOCK DO NOT OPEN**

**CAUTION:** TO REDUCE THE RISK OF ELECTRIC SHOCK DO NOT REMOVE COVER (OR BACK) NO USER-SERVICEABLE PARTS INSIDE REFER SERVICING TO QUALIFIED SERVICE PERSONNEL.

This lightning flash with arrowhead symbol within an equilateral triangle is intended to alert the user to the presence of uninsulated dangerous voltage within the product's enclosure that may be of sufficient magnitude to constitute a risk of electric shock to persons.

The exclamation point within an equilateral triangle is intended to alert the user to the presence of important operating and maintenance (servicing) instructions in the literature accompanying the product.

**WARNING:** TO PREVENT FIRE OR ELECTRIC SHOCK HAZARD, DO NOT EXPOSE THIS PRODUCT TO RAIN OR MOISTURE.

**CAUTION:** The apparatus should not be exposed to water (dripping or splashing) and no objects filled with liquids, such as vases, should be placed on the apparatus.

**WARNING:** Do not install this equipment in a confined space such as a book case or similar unit.

**CAUTION:** Do not use high voltage products around this product. (ex. Electrical swatter) This product may malfunction due to electrical shock.

**CAUTION:** This product employs a Laser System. To ensure proper use of this product, please read this owner's manual carefully and retain it for future reference. Shall the unit require maintenance, contact an authorized service center.
Use of controls, adjustments or the performance of procedures other than those specified herein may result in hazardous radiation exposure. To prevent direct exposure to laser beam, do not try to open the enclosure.

**CAUTION:** Do not block any ventilation openings. Install in accordance with the manufacturer's instructions.
Slots and openings in the cabinet are provided for ventilation and to ensure reliable operation of the product and to protect it from over heating. The openings shall be never be blocked by placing the product on a bed, sofa, rug or other similar surface. This product should not be placed in a built-in installation such as a bookcase or rack unless proper ventilation is provided or the manufacturer's instruction has been adhered to.

**NOTICE:** For safety marking information including product identification and supply ratings, please refer to the main label on the bottom or the other surface of the product.

**CAUTION concerning the Power Cord**

Most appliances recommend they be placed upon a dedicated circuit;

That is, a single outlet circuit which powers only that appliance and has no additional outlets or branch circuits. Check the specification page of this owner's manual to be certain. Do not overload wall outlets. Overloaded wall outlets, loose or damaged wall outlets, extension cords, frayed power cords, or damaged or cracked wire insulation are dangerous. Any of these conditions could result in electric shock or fire. Periodically examine the cord of your appliance, and if its appearance indicates damage or deterioration, unplug it, discontinue use of the appliance, and have the cord replaced with an exact replacement part by an authorized service center. Protect the power cord from physical or mechanical abuse, such as being twisted, kinked, pinched, closed in a door, or walked upon. Pay particular attention to plugs, wall outlets, and the point where the cord exits the appliance.

The Power Plug is the disconnecting device. In case of an emergency, the Power Plug must remain readily accessible.

This device is equipped with a portable battery or accumulator.

**Safety way to remove the battery or the battery from the equipment:** Remove the old battery or battery pack, follow the steps in reverse order than the assembly. To prevent contamination of the environment and bring on possible threat to human and animal health, the old battery or the battery put it in the appropriate container at designated collection points. Do not dispose of batteries or battery together with other waste. It is recommended that you use local, free reimbursement systems batteries and accumulators. The battery shall not be exposed to excessive heat such as sunshine, fire or the like.

**Caution:** No naked flame sources, such as lighted candles, should be placed on the apparatus.

## Symbols

| | |
|---|---|
| ~ | Refers to alternating current(AC). |
| ⎓ | Refers to direct current(DC). |
| ⧈ | Refers to class II equipment. |
| ⏻ | Refers to stand-by. |
| I | Refers to "ON" (power). |
| ϟ | Refers to dangerous voltage. |

**Note:** Do not look directly at the light emitting part when the LIGHTING is turned on.

If the illumination brightness is glaring, switch on the room lights or turn off the LIGHTING of the unit.

# Table of Contents

## 1 Getting Started

2 Safety Information
6 Unique Features
7 Playable file Requirement
7 – Music file requirement
7 – Compatible USB Devices
7 – USB device requirement
8 Remote control
10 Front panel
10 Rear panel
11 Top panel

## 2 Connecting

13 How to Affix the Ferrite Core
13 – Affix the Ferrite Core for power cord and speaker cables
13 Connecting to speakers
14 Optional Equipment Connection
14 – AUX IN Connection
15 – PORT. IN Connection
16 – USB Connection
16 – Antenna Connection

## 3 Operating

17 Basic Operations
17 – CD/USB Operations
18 – Auto Play
18 – Selecting a folder and an MP3/WMA file
19 – Deleting an MP3/WMA file
19 Playback Effect
19 – DJ EFFECT
19 – SCRATCH Effect
20 – AUTO DJ
20 – DJ PRO
20 – Adjusting TEMPO
21 – MIX
21 – AUTO SYNC
22 Using BLUETOOTH® wireless technology
22 – Listening to music stored on the Bluetooth devices
24 Using the Music Flow Bluetooth App
24 – About "Music Flow Bluetooth" App
24 – Install "Music Flow Bluetooth" App onto Your Bluetooth Device
25 – Activate Bluetooth with "Music Flow Bluetooth" App
26 Radio Operations
26 – Listening to the radio
26 – Improving poor FM reception
26 – Presetting the Radio Stations
26 – Deleting all the saved stations
27 Sound adjustment
27 – Setting the sound mode
27 – Setting the USER EQ
28 Advanced Operations
28 – Recording to USB
30 – JUKE BOX Playback
31 Other Operations
31 – Turn off the sound temporarily
31 – CHILDSAFE Mode
31 – Displaying file information (ID3 TAG)
31 – DEMO
31 – Using Microphone
32 – Using H/P MODE
32 – VOICE CANCELLER
33 – KEY CHANGER
33 – Lighting Effects
33 – PARTY THRUSTER
33 Setting the Clock

33 – Setting the Clock through "Music Flow Bluetooth" App
33 – Using your player as an alarm clock
34 – Sleep Timer Setting
34 – Dimmer
34 Auto power down
35 – AUTO POWER On
35 – Auto function change
36 LG Sound Sync
37 WIRELESS PARTY LINK Connection

## 4 Troubleshooting

38 Troubleshooting
38 – General

## 5 Appendix

40 General specifications
41 Speakers specifications
41 Trademarks and Licenses
42 Maintenance
42 – Notes on Discs
42 – Handling the Unit

# Unique Features

## Bluetooth®

Listens to music stored on your **Bluetooth** device.

## Portable In

Listens to music from your portable device. (MP3, Notebook, etc.)

## Playback effects

Listens to music with various sound and playback effects.

## USB Direct Recording

Records music to your USB device.

## Music Flow Bluetooth

Music Flow **Bluetooth** is an App designed to let you take control of some of LG's latest Audio devices. Refer to page 24.

## LG Sound Sync

Controls volume level of this unit by the remote control of your LG TV that is compatible with LG Sound Sync.

# Playable file Requirement

## Music file requirement

MP3/WMA file compatibility with this unit is limited as follows.

- Sampling frequency : within 32 to 48 kHz (MP3), within 32 to 48 kHz (WMA)
- Bit rate : within 32 to 320 kbps (MP3), 40 to 192 kbps (WMA)
- Maximum files : Data CD : 999 / USB : 2000
- Maximum folders : Data CD : 99 / USB : 200
- File extensions : ".mp3"/ ".wma"
- Certain MP3/WMA files may not be played depending on the type or format of the file.
- CD-ROM file format : ISO 9660/ JOLIET
- We recommend that you use Easy-CD Creator, which creates an ISO 9660 file system.

The DTS is not supported. In case of DTS audio format, audio is not output.

You have to set the disc format option to [Mastered] in order to make the discs compatible with the LG players when formatting rewritable discs. When setting the option to Live File System, you cannot use it on LG players.

(Mastered/Live File System : Disc format system for Windows Vista)

## Compatible USB Devices

- MP3 Player : Flash type MP3 player.
- USB Flash Drive :
  Devices that support USB2.0 or USB1.1.
- The USB function of this unit does not support all USB devices.

## USB device requirement

- Devices which require additional program installation when you have connected it to a computer, are not supported.
- Do not extract the USB device while in operation.
- For a large capacity USB, it may take longer than a few minute to be searched.
- To prevent data loss, back up all data.
- If you use a USB extension cable or USB hub, the USB device is not recognized.
- Using NTFS file system is not supported. (Only FAT(16/ 32) file system is supported.)
- This unit recognizes up to 2,000 files.
- External HDD, Card readers, Locked devices, or hard type USB devices are not supported.
- USB port of the unit cannot be connected to PC. The unit cannot be used as a storage device.
- Some USB may not work with this unit.

# Remote control

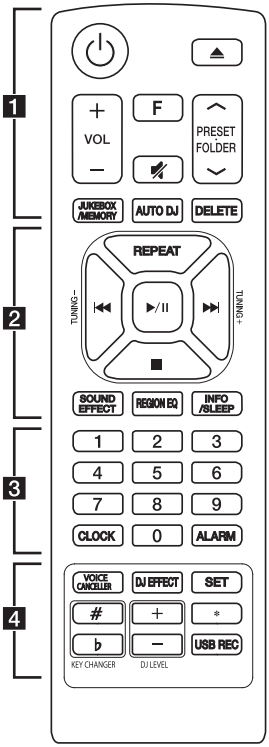


1

(Standby/On) **:** Switches the unit ON or OFF.

(Open/Close) **:** Opens and closes the disc tray.

**VOL** (Volume) **+/- :** Adjusts speaker volume.

**F** (Function) : Selects the function and input source.

(Mute)**:** Mutes the sound.

**PRESET·FOLDER ∧/∨ :**

- Searches for a folder of MP3/WMA files. When a CD/USB containing MP3/WMA files in several folders is being played, press **PRESET·FOLDER ∧/∨** to select the folder you want to play.
- Chooses a preset number for a radio station.

**JUKEBOX/MEMORY :**

- Stores radio stations.
- Deletes all the saved stations.
- Selects JUKE BOX mode.
- Makes your favorites list.

**AUTO DJ :** Selects the AUTO DJ mode. (For more information refer to page 20)

**DELETE :**

- Deletes MP3/WMA files. (USB only).
- Deletes a song on the programmed list.

## Replacement of battery

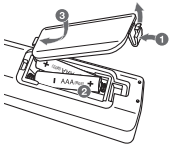


Remove the battery cover on the rear of the remote control, and insert the battery with ⊕ and ⊖ matched correctly.

**2**

**REPEAT :** Listens to your tracks/files repeatedly or randomly.

**TUNING-/+ :** Selects the radio stations.

**⏮/⏭** (Skip/Search) **:**

- Skips Fast backward or Forward.
- Searches for a section within a track/file.

**▶/❚❚** (Play/Pause) **:**

- Starts or pauses playback.
- Selects STEREO/MONO.

**■** (Stop)**:**

- Stops playback or recording.
- Cancels DELETE function.

**SOUND EFFECT :** Chooses sound impressions.

**REGION EQ :** Chooses region equalizer.

**INFO / SLEEP**

- Sees informations about your music. An MP3 file often come with ID3 tag. The tag gives the Title, Artist, Album or Time information.
- Sees the name of connected all Bluetooth device in Bluetooth mode.
- In status of WIRELESS PARTY LINK Connection, device name of SLAVE unit appears in the MASTER unit and Device name of MASTER unit appears in the SLAVE unit.
- Press and hold to set the system to turn off automatically at a specified time.
  (Dimmer : The display window will be darkened by half.)

**3**

**0** to **9** numerical buttons **:** Selects numbered tracks, files, or preset number.

**CLOCK** : Sets a clock and checks a time.

**ALARM :** With the ALARM function you can turn CD, USB play and Tuner reception on at a desired time.

**4**

**VOICE CANCELLER :** You can enjoy the function while playing the music, by reducing singer vocal of music in the various source.

**DJ EFFECT :** Selects DJ EFFECT mode. (Refer to page 19)

**SET :** Confirms the setting.

**KEY CHANGER (#/♭) :** Changes the key to suit your vocal range.

**DJ LEVEL +/- :** Adjusts the level of DJ EFFECT sound.

***** : This button is not available.

**USB REC :** USB direct recording.

# Front panel

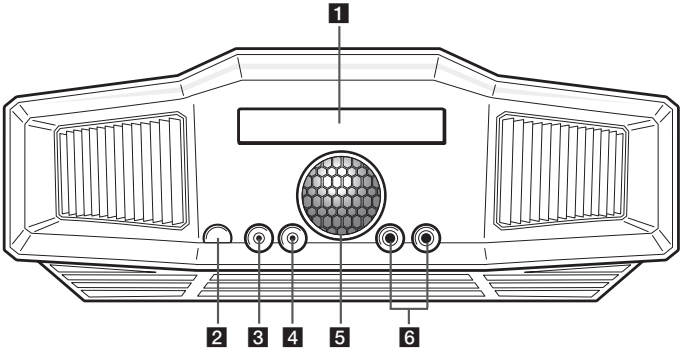


1 Disc tray

2 ℝ
Remote Sensor

3 HEADPHONE
Connects a headphone.

4 PORT. (Portable) IN
Connects a portable device.

5 DANCE LIGHTING (Lighting ball)
- Shows the various lighting patterns and color.
- You can control angle up and down with your finger.

6 MIC (Microphone) 1/2
Connects a microphone.

# Rear panel

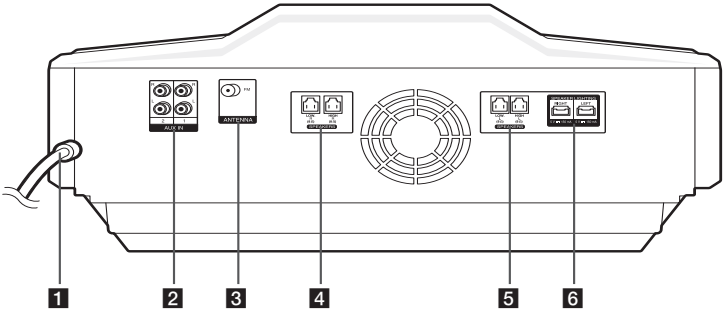


1 Power cord

**Caution**

- Connect the power cord to wall outlet directly if possible. Or when you use an extension cable, it is highly recommended to use an extension cable of 110 V / 15 A or 230 V / 15 A, otherwise the unit may not operate properly because of the lack of power supply.
- Do not overload the extension cord with excessive electrical load.

2 AUX IN 1/2 (L/R)

3 ANTENNA (FM)

4 R SPEAKERS
Connects the right speaker's cables.

5 L SPEAKERS
Connects the left speaker's cables.

6 SPEAKER LIGHTING
Connects the speaker lighting cables.

# Top panel

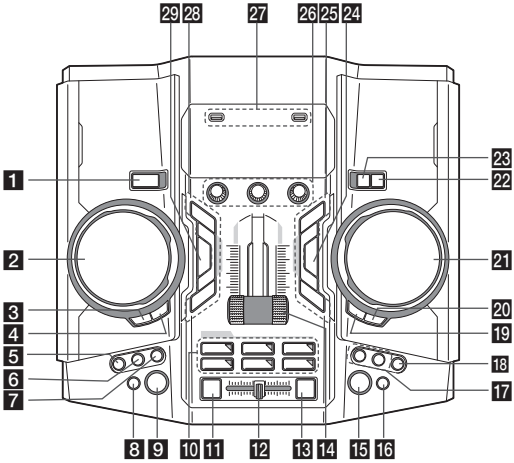


**1** ⏻/❙(Standby/On)

**2** **SCRATCH / LEVEL CONTROL, SEARCH KNOB (A SIDE)**
- Turns clockwise or counterclockwise to make the scratch sound.
- Turns clockwise or counterclockwise to control the DJ EFFECT level.
- Turns clockwise or counterclockwise to search to the next/previous file or next/previous folder. (CD/USB 1 only)

**3** **SEARCH (A SIDE)**
Searches to the next/previous file or next/previous folder by pressing SEARCH repeatedly. (CD/USB 1 only)

**4** **OK (A SIDE)**
Selects the desired file or folder after searching a file or folder. (CD/USB 1 only)

**5** **H/P MODE**
Presses to select a headphone monitor mode.

**6** **H/P VOLUME**
Presses to select a headphone's volume control mode.

**7** **MIC (Microphone) VOLUME**
Presses to select a microphone's volume control mode.

**8** **BASS BLAST**
Selects BASS BLAST effect directly.

**9** **LIGHTING**
Changes the lighting patterns and colors or turns off the lighting effects of DANCE LIGHTING and SPEAKER LIGHTING.

**10** **DJ PRO PAD**
Presses a desired sound pad.

**11** **AUTO SYNC**
When using MIX, you can synchronize the tempo of audio files being played in USB 1 and USB 2 by pressing **AUTO SYNC**.

**12** **Cross fader**
Adjusts the sound volume of mixing files when using MIX ON by pressing **MIX**.

**13** **MIX**
Mixes audio sound.

**14** **PARTY THRUSTER**
Slide the lever to create a party atmosphere.

**15** **REGION EQ**
Chooses region equalizer.

**16** **⏏ EJECT**
Opens and closes the disc tray.

**17** **KEY CHANGER (♭/♯)**
Changes the key to suit your vocal range.

**18** **VOICE CANCELLER**
You can enjoy the function while playing the music, by reducing singer vocal of music in the various source.

**19** **SEARCH (B SIDE)**
Searches to the next/previous file or next/previous folder by pressing SEARCH repeatedly. (USB 2 only)

**20** **OK (B SIDE)**
Selects the desired file or folder after searching a file or folder. (USB 2 only)

**21 SCRATCH / LEVEL CONTROL, SEARCH KNOB (B SIDE)**
- Turns clockwise or counterclockwise to make the scratch sound.
- Turns clockwise or counterclockwise to control the USER EQ level.
- Turns clockwise or counterclockwise to search to the next/previous file or next/previous folder. (USB 2 only)

**22 F (Function) / WIRELESS LINK**
- Selects the function and input source.
- Press and hold for 3 seconds to select WIRELESS PARTY LINK mode.

**23 USB REC / DEMO**
- Records to USB 1.
- Copys USB 2 to USB 1.
- Shows Demo mode.

**24 USER EQ**
Selects the sound effect created by your own.

**25 Basic controls** (USB 2 only)
**I<< / >>I** (Skip/Search)
Skips Fast backward or Forward. /
Searches for a section within a track/file.
**>II** (Play/Pause)
Starts or pauses playback.
**□** (Stop)
Stops playback or cancels DELETE function.

**26 A / B TEMPO**
Adjusts TEMPO in USB function.
**VOLUME**
Adjusts speaker, microphone or headphone volume.

**27 USB 1 / USB 2**
You can play or record sound files by connecting the USB device.

**28 Basic controls** (CD / USB 1 / BLUETOOTH / RADIO only)
**I<< / >>I** (Skip/Search)
- Skips Fast backward or Forward. /
  Searches for a section within a track/file.
- Selects the radio stations.

**>II** (Play/Pause)
-Starts or pauses playback.
- Selects Stereo/Mono.

**□** (Stop)
Stops playback or cancels DELETE function.

**29 DJ EFFECT**
Selects a desired DJ effect.

# How to Affix the Ferrite Core

Ferrite core may not be provided depending on each nation's regulations.

## Affix the Ferrite Core for power cord and speaker cables

You must affix a ferrite core in order to reduce or eliminate electrical interference.

1. Pull the stopper [a] of the ferrite core to open.
2. Wind the L SPEAKERS cables around the ferrite core twice.
   Wind the R SPEAKERS cables around the ferrite core twice.
   Wind the LEFT and RIGHT SPEAKER LIGHTING cables all together around the ferrite core twice.
3. Close the ferrite core until it clicks.

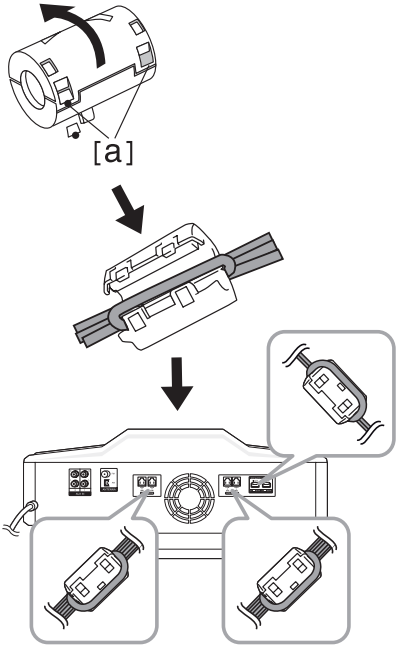


# Connecting to speakers

Connect the speaker cable plugs to the **SPEAKERS** connector.

To connect the speaker light cable to the unit, insert the cable to **SPEAKER LIGHTING** connectors on the unit.

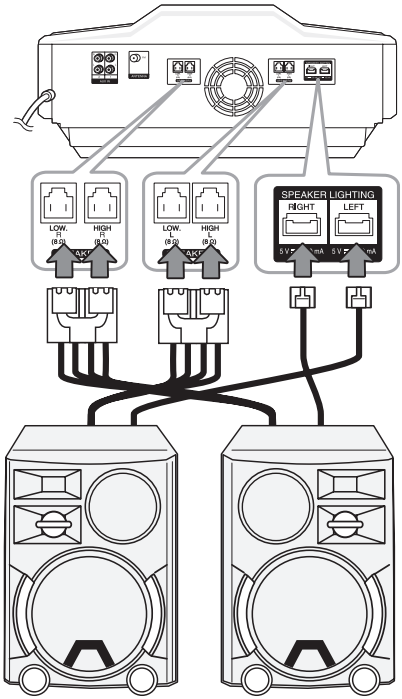


**Caution**

- Make sure that the jacks and the speakers are matched correctly.
- Make sure to connect the cables to connectors tightly on the unit.

**Caution**

- Do not try to lift the speaker alone. It needs two persons to lift the speaker. Otherwise it may result in the speaker malfunction and cause personal injury and/or property damage.
- When you connect the speakers to the unit, make sure to connect the speaker's cable and plug to the corresponding speaker connector.
- The speakers must be placed a minimum of 20 cm from the unit for preventing the vibration caused by the speakers.

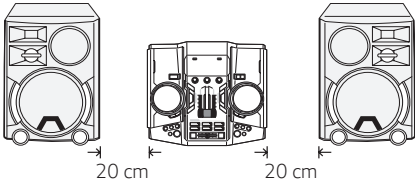


- Check the volume level before playing music to prevent infirm, child, and pregnant women from being shocked by the sudden and loud sound from the unit.
- Do not use the unit in a limited space. It may damage a person's hearing. It is recommended to use it in a wide space.
- Be careful to make sure children not to put their hands or any objects into the opening speaker duct hole.
- Use the speaker supplied with this unit only. Using any other speaker may cause malfunction.
- The speakers contain magnet parts, so color irregularity may occur on the TV screen or PC monitor screen. Please use the speakers far away from either TV screen or PC monitor.
- Avoid looking at the speaker lights for a long time. It may cause damage to eyesight.

# Optional Equipment Connection

## AUX IN Connection

Connect an output of auxiliary device (Camcorder, TV, Player, etc) to the **AUX IN 1/2 (L/R)** connector.

If your device has only one output for audio (mono), connect it to the left audio jack on the unit.

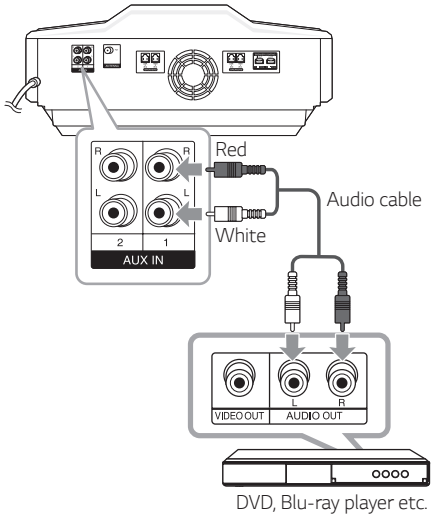

## PORT. IN Connection

Connect an output (earphone or line out) of portable device (MP3 or PMP etc) to the **PORT. IN** connector.

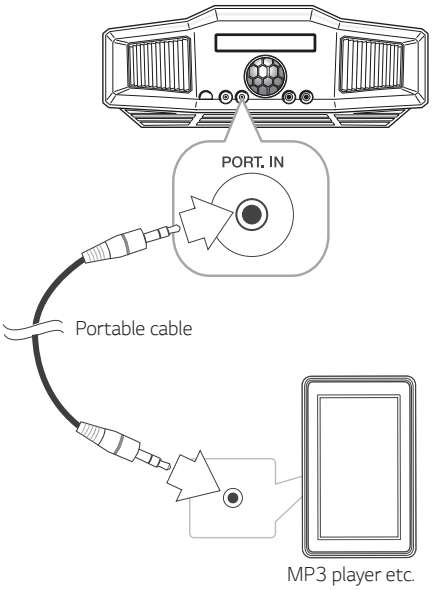


### Listening to music from your portable player or external device

The unit can be used to play the music from many types of portable player or external device.

1. Connect the portable player to the **PORT. IN** connector of the unit.

   Or

   Connect the external device to the **AUX IN 1/2 (L/R)** connector of the unit.
2. Turn the power on by pressing ⏻ on the remote control or ⏻/❙ on the unit.
3. Press **F** on the remote control or **F / WIRELESS LINK** on the unit to select **AUX 1**, **AUX 2** or **PORTABLE** function.
4. Turn on the portable player or external device and start it playing.

**Note**

Automatically switches to the PORTABLE function when you connect the portable device to the PORT. IN connector.

## USB Connection

Connect a USB device (or MP3 player, etc.) to the USB ports on the unit.

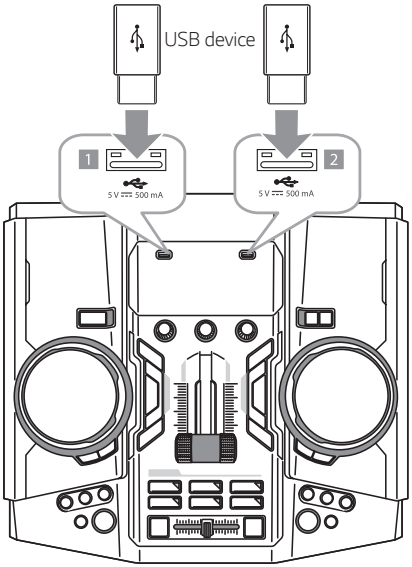


**Note**

Removing the USB device from the unit :

1. Choose a different function/mode or press ■ on the remote control or ☐ on the unit twice in a row.
2. Remove the USB device from the unit.

## Antenna Connection

Connect the supplied FM antenna for listening to the radio.

Connect the FM wire antenna to the FM antenna connector.

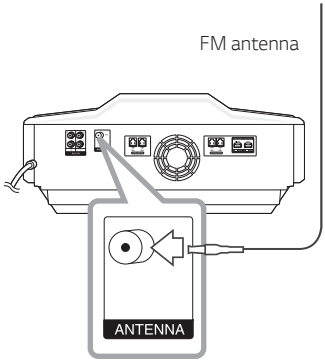


**Note**

Be sure to fully extend the FM wire antenna.

# Basic Operations

## CD/USB Operations

1. Insert the disc by pressing ⏏ on the remote control or ⏏ **EJECT** on the unit or connect the USB device to the USB port.
2. Select CD or USB function by pressing **F** on the remote control or **F / WIRELESS LINK** on the unit.

| To | Do this |
|---|---|
| Stop | Press ■ on the remote control or ☐ on the unit. |
| Playback | Press ▶/II on the remote control or >II on the unit. |
| Pause | Press ▶/II on the remote control or >II on the unit during playback. |
| Searching for a section within a track/file | Press and hold I◀◀/▶▶I on the remote control or I<<<>>>I on the unit during playback and release it at the point you want to listen to. |
| Selecting a track/file directly | Press **0** to **9** numerical buttons on the remote control to go to the desired file or track directly. |
| Skipping to the next/previous track/file | - In stop status,<br>Press I◀◀/▶▶I on the remote control or I<<<>>>I on the unit to go to the next/previous track/file.<br>- During Playback,<br>By using I◀◀ / ▶▶I buttons :<br>Press ▶▶I on the remote control or >>>I on the unit to go to the next track/file.<br>Playing less than 2 seconds, press I◀◀ on the remote control or I<<< on the unit to go to the previous track/file.<br>Playing after 3 seconds, press I◀◀ on the remote control or I<<< on the unit to go to the beginning of the track/file. |
| Playing repeatedly or randomly | Press **REPEAT** on the remote control repeatedly. Refer to the note for details about the display change. |

**Note**

- The display changes in the following order.

| USB | MP3/WMA CD | Audio CD |
|---|---|---|
| REPEAT TRK | REPEAT TRK | REPEAT TRK |
| REPEAT *DIR | REPEAT DIR | - |
| REPEAT ALL | REPEAT ALL | REPEAT ALL |
| RANDOM | RANDOM | RANDOM |
| OFF | OFF | OFF |

*DIR : Directory

- When you play JUKE BOX list, only REPEAT TRK and REPEAT ALL are available.
- Even after restarting the unit or switching one function to another, you can listen to music from the point where it's last been played.
- The next file name is displayed every 30 seconds. (Except RANDOM play, AUTO DJ RANDOM play, the last file of playlist, etc.)
- If you leave the disc tray open for 5 minutes, it will close automatically.

## Auto Play

- AUDIO/MP3/WMA CD is played automatically after disc tray is open and then closed.
- Automatically switches to the CD function if disc tray is open and then closed when there is no disc in disc tray.
- When CD or USB is inserted
  - If you press **>||** on the **A SIDE** of the unit, the function is changed to CD or USB 1 and playback starts. (Except Bluetooth / Tuner Function)
  - If you press **>||** on the side **B SIDE** of the unit, the function is changed to USB 2 and playback starts. (except MIXER ON mode)

**Note**

- When CD or USB is inserted
  - Function is changed to CD or USB 1 if **|<</>>|**, **□**, **SEARCH** on the **A SIDE** of the unit is pressed. (Except Bluetooth/ Tuner Function)
  - Function is changed to USB 2 if **|<</>>|**, **□**, **SEARCH** on the **B SIDE** of the unit is pressed. (Except MIXER ON mode)

## Selecting a folder and an MP3/WMA file

**On the unit**

1. Press **SEARCH** and rotate **SCRATCH / LEVEL CONTROL, SEARCH KNOB** until a desired file appears. You can also search a folder if you press SEARCH again.
2. Press OK or **>||** to play the selected file. When you search a folder, press **OK** to select a file in the folder, then press **OK** or **>||** again. The selected file is played.

**On the remote control**

1. Press **PRESET·FOLDER ∧/∨** on the remote control repeatedly until a desired folder appears.
2. Press **▶/II** to play it. The first file of folder will play.

**Note**

- CD / USB Folders/Files are recognized as below.

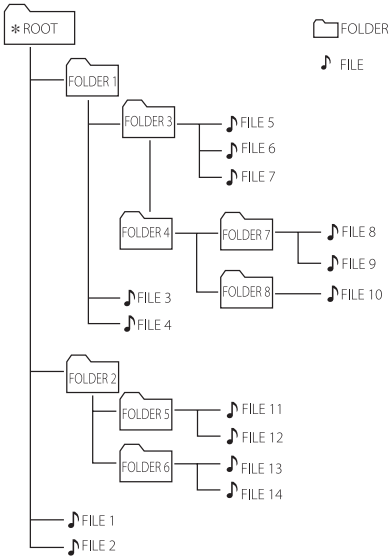


- If there is no file in a folder, the folder will not appear.
- Folders will be presented as the following order,
  ROOT → FOLDER 1 → FOLDER 3 → FOLDER 7 → FOLDER 8 → FOLDER 5 → FOLDER 6
- File will be played from ♪ file No.1 to ♪ file No.14 one by one.
- Files and folders will be presented in order recorded and may be presented differently according to the record circumstances.
- *ROOT : The first screen you can see when a computer recognize the USB is "ROOT".

## Deleting an MP3/WMA file

You can delete file, folder or format by pressing **DELETE**. This function is supported only in stop status. (USB only)

1. -Select the file you want to delete and press **DELETE**.

   -Select the folder you want to delete by pressing **PRESET·FOLDER** ∧/∨ on the remote control and press **DELETE**.

   -Press and hold **DELETE** to format the USB device.

   Or

   Press **DELETE** repeatedly during selecting the MP3/WMA file.

   The display changes in the following order.

   - DEL FILE? : Deletes file
   - DEL FOLDER? : Deletes folder
   - FORMAT? : Formats USB

2. To delete file/folder or format, press ▶/❚❚ on the remote control or press ▶❚❚ on the unit.
   If you want to exit the current mode, press ■ on the remote control or press ☐ on the unit.

**Caution**

- Do not extract the USB device during operation. (play, delete, etc.)
- Regular back up is recommended to prevent data loss.
- The delete function may not be supported according to the USB status. (lock, etc.)

# Playback Effect

The unit supports various sound and playback effects : DJ EFFECT, SCRATCH, DJ PRO, AUTO DJ, TEMPO, MIX, AUTO SYNC.

## DJ EFFECT

It allows you to enjoy DJ EFFECT such as FLANGER/ PHASER/WAH/DELAY sound effect.

1. Press **DJ EFFECT** to select a desired DJ EFFECT (FLANGER, PHASER, WAH, DELAY, OFF).
2. Turn **SCRATCH / LEVEL CONTROL, SEARCH KNOB** clockwise or counterclockwise to adjust the DJ EFFECT level between 0 to 15.

**Note**

- The DJ EFFECT mode is displayed for 3 seconds when a **DJ EFFECT** Key is inputted.
- The current gage level is displayed when adjusting gage.
- If the function changed or the unit is turned off and on, DJ EFFECT mode with DJ EFFECT is turned off.

## SCRATCH Effect

You can output and mix the sound effects of the SCRATCH.

Rotating **SCRATCH / LEVEL CONTROL, SEARCH KNOB** to mix the scratch sound.

- You can hear effect of scratch sound depending on the direction in which you rotate **SCRATCH / LEVEL CONTROL, SEARCH KNOB**.

## AUTO DJ

Auto DJ blends the end of one song into the beginning of another for seamless playback. It equalizes volume across tracks/files for uninterrupted playback.

Press **AUTO DJ** on the remote control repeatedly, the display changes as followings. RANDOM (AUTO DJ RANDOM) -> REPEAT ALL (AUTO DJ SEQUENTIAL) -> (AUTO DJ OFF)

| Mode | Display Window | Description |
|---|---|---|
| RANDOM | RANDOM (AUTO DJ RANDOM) | The music is played randomly on this mode. |
| REPEAT | REPEAT ALL (AUTO DJ SEQUENTIAL) | The music is played repeatedly on this mode. |
| OFF | - (AUTO DJ OFF) | - |

**Note**

- AUTO DJ mode does not support searching for a section within a track/file or to play repeatedly or randomly.
- If you move to other functions or stop the music using ☐ on the unit (or ■ on the remote control) on AUTO DJ mode, AUTO DJ will be disable.
- AUTO DJ is not supported in the music file whose length is less than 60 seconds.
- During recording, AUTO DJ is not available.
- Only AUTO DJ SEQUENTIAL is selected when played JUKE BOX list.

## DJ PRO

It allows you to mix CLUB, DRUM or USER sound effect. Each mode has up to 6 sounds effect.

1. Press and hold **DJ PRO PAD (CLUB, DRUM or USER)** to select a desired DJ PRO sound effect.
2. Press a **DJ PRO PAD (1,2,3,4,5,6)** of desired sound.

**Note**

- If you want to use USER, you have to register a source with "Music Flow Bluetooth" app. If the source is not register to USER, "EMPTY" or "NO SOUND" appears on the display window.
- Initial DJ PRO mode is CLUB sound effect.
- DJ PRO mode is displayed for 3 seconds when you press **DJ PRO PAD (CLUB, DRUM or USER)**.
- The DJ PRO sound is mixed when you press a **DJ PRO PAD (1,2,3,4,5,6)**.
- The currently playing DJ PRO sound is stopped and the selected DJ PRO sound outputs if you press a different **DJ PRO PAD (1,2,3,4,5,6)** while DJ PRO sound is playing.

## Adjusting TEMPO

You can adjust the Tempo for USB function 1 or 2 from 50 (MIN) to 150 (MAX).

Rotate **A TEMPO** to adjust the tempo for USB 1.
Rotate **B TEMPO** to adjust the tempo for USB 2.

**Note**

- The tempo is set as 100 if you turn the unit off, change the function or fully stop.
- The tempo is kept when you pause and resume play.

## MIX

You can mix audio sounds.

1. Press **MIX**. 'MIXER ON' is displayed.
   Select a desired Function for **A SIDE** and play it.
   Mix is available in all functions except USB 2.
2. During playback, insert a USB device in USB port **2** and play it. **B SIDE** is fixed as USB 2 function.
3. Move the Mix fader to adjust the sound volume of mixed sound. Move it to the left to lower the volume of **B SIDE** and move it to the right to lower the volume of **A SIDE**.

**Note**

- In MIXER ON mode,
  - You can adjust the Tempo for USB function 1 or 2.
  - If you press **|<</>>|**, **□** or **>||** on the unit, it works only for each side.
  - If you press **|◀◀ / ▶▶|**, **▶/II** or **■** on the remote control, it works for both **A SIDE** and **B SIDE**.
  - For operating, it is recommended to use **|<</>>|**, **□** or **>||** on the unit instead of remote control's.
  - Numerical buttons do not work.
  - You can use H/P MODE. (Refer to page 32)
- If you turn off the unit in the middle of mixing process, MIX mode turns to OFF.

## AUTO SYNC

When using Mixing, you can synchronize the tempo of audio files being played in USB 1 and USB 2 by pressing **AUTO SYNC**.

To stop it, press **AUTO SYNC** twice.

**Note**

- The tempo of music being played in USB1 is synchronized to that in USB2.
- **A TEMPO** doesn't work when AUTO SYNC is on.
- If USB2 fully stops or function is changed, AUTO SYNC function is cancelled.
- In case of below, AUTO SYNC error may occur depending on the sound source.
  - The silent section in the beginning of the track.
  - Intro or bridge section in which few musical instruments appear.
  - In cases where playback speed or tempo of the song changes.
  - In case that the data for BPM is provided in real time, not the beginning of the song.
- If the song is being played too fast or slow, press and hold **AUTO SYNC**. 'AUTO SYNC/ RE-ANALYZING' is displayed.
- AUTO SYNC is available only when USB 1 is selected for **A SIDE** and USB 2 is selected for **B SIDE** in MIXER ON mode and both are being played.

# Using BLUETOOTH® wireless technology

## About Bluetooth

**Bluetooth** is wireless communication technology for short range connection.

The sound may be interrupted when the connection interfered by the other electronic wave or you connect the **Bluetooth** in the other rooms.

Connecting individual devices under **Bluetooth** wireless technology does not incur any charges. A mobile phone with **Bluetooth** wireless technology can be operated via the Cascade if the connection was made via **Bluetooth** wireless technology.
Available Devices : Mobile phone, MP3, Laptop, PDA.

## Bluetooth Profiles

In order to use **Bluetooth** wireless technology, devices must be able to interpret certain profiles. This unit is compatible with following profile.

A2DP (Advanced Audio Distribution Profile)

Codec : SBC

# Listening to music stored on the Bluetooth devices

## Pairing your unit and Bluetooth device

Before you start the pairing procedure, make sure the **Bluetooth** feature is activated on your **Bluetooth** device. Refer to your **Bluetooth** device's user guide. Once a pairing operation is performed, it does not need to be performed again.

1. Turn on the unit.
2. Operate the **Bluetooth** device and perform the pairing operation. When searching for this unit with the **Bluetooth** device, a list of the devices found may appear in the **Bluetooth** device display depending on the type of **Bluetooth** device. Your unit appears as "LG CM9960(XX)".

**Note**

- XX means the last two digits of **Bluetooth** address. For example, if your unit has a **Bluetooth** address such as 9C:02:98:4A:F7:08, you will see "LG CM9960(08)" on your **Bluetooth** device.
- Depending on the **Bluetooth** device type, some devices may have a different pairing process. Enter the PIN code (0000) as needed.
- You can connect this unit with up to 3 **Bluetooth** devices simultaneously using the same method as described above, only in the **Bluetooth** function.
- The multi pairing connection is only supported on Android or iOS devices. (Multi pairing connection may not be supported depending on the connected device specifications.)
- Removable/detachable **Bluetooth** devices (Ex: Dongle etc.) will not support multi pairing.

3. When this unit is successfully connected with your **Bluetooth** device, "BLUETOOTH PAIRED" appears on the display window and change to **Bluetooth** device name soon.

**Note**

- "BLUETOOTH PAIRED" will momentarily appear on the display when you connect other devices for multi pairing.
- If the device name is unavailable, "_" will be displayed.

4. Listen to music.
   To play a music stored on your **Bluetooth** device, refer to your **Bluetooth** device's user guide.

**Note**

- When using **Bluetooth®** technology, you have to make a connection between the unit and the **Bluetooth** device as close as possible and keep the distance.
  However, it may not work well in certain situations as described below :
  - There is a obstacle between the unit and the **Bluetooth** device.
  - There is a device using same frequency with **Bluetooth®** technology such as a medical equipment, a microwave or a wireless LAN device.
- You should connect your **Bluetooth** device to this unit again when you restart it.
- Even if this unit connected up to 3 **Bluetooth** devices in the **Bluetooth** mode, you can play and control music by using only one of the connected devices.

## Controls connected Bluetooth device

You can control connected Bluetooth device by the unit; play, pause, stop, skip.

**Note**

- Only Android OS and iOS is available to use this function.
- This function may not be supported depending on the Bluetooth device, or operated differently.

**Note**

- When this unit connected with multiple **Bluetooth** devices, only one device which you are playing keeps **Bluetooth** connection when you change the function to the others.
- The sound may be interrupted when the connection has interference from other electronic devices.
- You may not control the **Bluetooth** device with this unit.
- Depending on the type of the device, you may not be able to use the **Bluetooth** function.
- You can enjoy wireless system using phone, MP3, Notebook, etc.
- The more distance between the unit and the **Bluetooth** device, the lower the sound quality becomes.
- **Bluetooth** connection will be disconnected when the unit is turned off or the **Bluetooth** device gets far from the unit.
- When **Bluetooth** connection is disconnected, connect the **Bluetooth** device to the unit again.
- When a **Bluetooth** device is not connected, "BLUETOOTH READY" appears on the display window.
- When you use the BT function, adjust the volume to a proper level on the **Bluetooth** device.
- If it is not in the BT function, only one device can be connected.
- If a **Bluetooth** device is connected when using LG TV, LG TV is disconnected and the **Bluetooth** device is connected.
- When you connect **Bluetooth** device (iOS device etc.) to this unit or operate the device, the volume level can be synchronized with each other.

# Using the Music Flow Bluetooth App

**Note**

- Only Android OS is available to use "Music Flow Bluetooth" app with this unit.
- It is recommended to use the latest version of app.

## About "Music Flow Bluetooth" App

"Music Flow Bluetooth" app brings a suite of new features to this unit.

To enjoy more features, you are recommended to download and install free "Music Flow Bluetooth" app.

Here is introduce a few of the many features of "Music Flow Bluetooth" app.

**Multi Juke box** : Your entertainment increases three fold when you connect up to 3 Bluetooth phones at the same time. Play music from all three phone and create a customized playlist from all the phones.

**Sampler Creator** : Record effects on your smartphone and very simply sync them via Bluetooth to the system. Be as creative as you can be.

## Install "Music Flow Bluetooth" App onto Your Bluetooth Device

There are two ways to install "Music Flow Bluetooth" App onto Your **Bluetooth** Device.

### Install "Music Flow Bluetooth" App through QR code

1. Install "Music Flow Bluetooth" app through QR code. Use the scanning software to scan the QR code.
2. Tap an icon for installation.
3. Tap an icon for downloading.

**Note**

- Make sure that your **Bluetooth** device is connected to the Internet.
- Make sure that your **Bluetooth** device has a scanning software application. If you don't have one, download one from "Google Android Market (Google Play Store)".
- Depending on the area, QR code may not work.

### Install "Music Flow Bluetooth" App through "Google Android Market (Google Play Store)"

1. Tap the "Google Android Market (Google Play Store)" icon.
2. In the search bar, type in the "Music Flow Bluetooth" and search it.
3. In the search result list, find and tap "Music Flow Bluetooth" to start downloading **Bluetooth** app.
4. Tap an icon for installation.
5. Tap an icon for downloading.

**Note**

- Make sure that your **Bluetooth** device is connected to the Internet.
- Make sure that your **Bluetooth** device is equipped with "Google Android Market (Google Play Store)".

## Activate Bluetooth with "Music Flow Bluetooth" App

"Music Flow Bluetooth" app helps to connect your **Bluetooth** device to this unit.

1. Tap "Music Flow Bluetooth" app icon on the home screen to open "Music Flow Bluetooth" app, and go to the main menu.
2. Tap [Menu] and select the unit you want.
3. If you want to get more information to operate, tap [Help] on the [Setting] menu.

**Note**

- "Music Flow Bluetooth" app will be available in the software version as follow;
  - Android O/S : Ver 4.0.3 (or later)
- If you use "Music Flow Bluetooth" app for operation, there would be some differences between "Music Flow Bluetooth" app and the supplied remote control. Use the supplied remote control as necessary.
- Depending on the **Bluetooth** device, "Music Flow Bluetooth" app may not work.
- After connection of "Music Flow Bluetooth" app, music may be output from your device. In this case, try connecting procedure again.
- If you operate the other applications or change the settings on your **Bluetooth** device while using "Music Flow Bluetooth" app, "Music Flow Bluetooth" app may operate abnormally.
- When "Music Flow Bluetooth" app operates abnormally, check your **Bluetooth** device and the connection of "Music Flow Bluetooth" app and then try to connect again.
- Depending on the smart phone's operating system, you have some differences for "Music Flow Bluetooth" operation.
- Check **Bluetooth** setting on your **Bluetooth** device if "Music Flow Bluetooth" app connection does not work well.

# Radio Operations

Be sure that FM aerial is connected. (Refer to page 16)

## Listening to the radio

1. Press **F / WIRELESS LINK** on the unit or **F** on the remote control until FM appears in the display window.
   The last received station is tuned in.
2. Auto tuning :
   Press and hold **TUNING -/+** on the remote control or **|<< / >>|** on the **A SIDE** of the unit for about two seconds until the frequency indication starts to change, then release. Scanning stops when the unit tunes in a station.

   Or

   Manual tuning :
   Press **TUNING -/+** on the remote control or **|<< / >>|** on the **A SIDE** of the unit repeatedly.
3. Adjust the volume by rotating volume knob on the unit or by pressing **VOL +/-** on the remote control repeatedly.

## Improving poor FM reception

Press **>II** on the **CD/USB 1** of the unit or **▶/II** on the remote control. This will change the tuner from stereo to mono and usually improve the reception.

## Presetting the Radio Stations

You can preset 50 stations for FM.

Before tuning, make sure to turn down the volume.

1. Press **F / WIRELESS LINK** on the unit or **F** on the remote control until FM appears in the display window.
2. Select the desired frequency by pressing **TUNING -/+** on the remote control or **|<< / >>|** on the unit.
3. Press **JUKEBOX/MEMORY** on the remote control. A preset number will blink in the display window.
4. Press **PRESET·FOLDER ∧/∨** on the remote control to select the preset number you want.
5. Press **JUKEBOX/MEMORY** on the remote control. The station is stored.
6. Repeat steps 2 to 5 to store other stations.
7. To listen a preset station, press **PRESET·FOLDER ∧/∨** or **0** to **9** numerical buttons on the remote control.

## Deleting all the saved stations

1. Press and hold **JUKEBOX/MEMORY** on the remote control for two seconds.
   "ERASE ALL?" will flash up on the unit display.
2. Press **JUKEBOX/MEMORY** on the remote control to erase all the saved radio stations.

# Sound adjustment

## Setting the sound mode

This system has a number of pre-set surround sound fields. The displayed items for the Equalizer may be different depending on sound sources and effects.

You can select a desired sound mode by using **SOUND EFFECT** on the remote control.

| On Display | Description |
|---|---|
| BASS BLAST | Reinforces the treble, bass and surround sound effect. |
| POP<br>CLASSIC<br>ROCK<br>JAZZ | This program lends an enthusiastic atmosphere to the sound, giving you the feeling you are at an actual rock, pop, jazz or classic concert. |
| FOOTBALL | You can enjoy the sound effect FOOTBALL STADIUM. |
| STANDARD | You can enjoy optimized sound. |

You can select a desired sound mode by using **REGION EQ** on the remote control.

| On Display | Region | Description |
|---|---|---|
| FUNK, REGUETON, SAMBA, BANDA, MERENGUE, AXE, SALSA, SERTANEJ, CUMBIA, TECNO BREGA, FORRO | Latin America | Optimized sound effect for the music genre prefered in each region. |
| ARABIC | Middle East | |
| DANGDUT | Indonesia | |
| AFRO | Africa | |
| INDIA | India | |

**Note**

- On some speakers, sound may not be heard or heard in low sound depending on the sound mode.
- By pressing **BASS BLAST** on the unit you can directly select BASS BLAST effect.

## Setting the USER EQ

You can adjust the sound level of **BASS**, **MIDDLE** and **TREBLE** as your preference.

1. Press **USER EQ** on the unit. "USER EQ" is displayed.
2. Press **USER EQ** repeatedly until the desired setting appears in the display window.
3. Rotate **SCRATCH/LEVEL CONTROL, SEARCH KNOB** of **B SIDE** to adjust the value.

# Advanced Operations

## Recording to USB

You can record a various sound source to USB 1. (CD, AUX, PORTABLE, Tuner, USB)

1. Connect a USB device to USB port 1 on the unit.
2. Press **F / WIRELESS LINK** on the unit or **F** on the remote control to select a Function you want to record.

   One track/file recording - You can record to USB after playing a track/file you want.
   All tracks/files recording - You can record to USB in full stop status.
   JUKE BOX list recording - After showing the JUKE BOX list, you can record it to USB.
   (Refer to page 30)
3. Start the recording by pressing **USB REC** on the remote control or **USB REC/DEMO** on the unit.
4. To stop recording, press and hold **USB REC/DEMO** on the unit or **USB REC** on the remote control.

### Recording in MIXER ON mode

Recording is available in MIXER ON mode. If you record in MIXER ON mode, the unit records the mixed sound from that point when you press **USB REC**.

1. Start mixing. Refer to page 21.
2. Start the recording by pressing **USB REC** on the remote control or **USB REC/DEMO** on the unit. To stop recording, press and hold **USB REC/DEMO** on the unit or **USB REC** on the remote control to stop recording. Otherwise, the recording continues.

### Pausing recording

During recording, press **USB REC/DEMO** on the unit or **USB REC** on the remote control to pause recording. Press it again to restart recording. (Tuner/AUX/PORTABLE/MIXER mode only)

**Note**

- VOICE CANCELLER or KEY CHANGER will be reset, if you use recording function during operating VOICE CANCELLER or KEY CHANGER.
- VOICE CANCELLER or KEY CHANGER can not be operated during recording.

### To select recording bit rate and speed

1. Press and hold **USB REC/DEMO** on the unit or **USB REC** on the remote control for 3 seconds.
2. Press **⏮/⏭** on the remote control or **|<</>>|** on the **A SIDE** of the unit to select a bit rate.
3. Press **USB REC/DEMO** on the unit or **USB REC** on the remote control again to set.
4. Press **⏮/⏭** on the remote control or **|<</>>|** on the **A SIDE** of the unit to select a desired recording speed. (AUDIO CD only)

   **X1 SPEED**
   - You can listen to music while recording it.

   **X2 SPEED**
   - You can just record the music file.
5. Press **USB REC/DEMO** on the unit or **USB REC** on the remote control to finish the setting.

### USB Copying

You can copy audio files in USB 2 to USB 1.

1. Connect a USB device including desired sound files to USB port **2** and select USB 2 Function.
2. Connect another USB device to USB port **1**.
3. Press **USB REC/DEMO** on the unit or **USB REC** on the remote control.
4. To stop recording, press and hold **USB REC/DEMO** on the unit or **USB REC** on the remote control.

The making of unauthorized copies of copy-protected material, including computer programs, files, broadcasts and sound recordings, may be an infringement of copyrights and constitute a criminal offense.
This equipment should not be used for such purposes.
**Be responsible**
**Respect copyrights**

## Note

- You can record various sound using MIC/DJ Pro/Scratch/DJ Effect/Original Source/PARTY THRUST sound. (Except USB Copying)
- You can control recorded MIC sound according to MIC volume.
- For stable recording, the output sound level goes down on its own when you record music from CD to USB.
- You can only change volume level between MIN and 30 during recording. (Only CD function)
- Do not remove the USB device or turn off the unit during USB recording. If dose not, an incomplete file may be made and not deleted on PC.
- If USB recording does not work, the message like "NO USB", "ERROR", "USB FULL", "NOT SUPPORT", "FILE MAX" is displayed on the display window.
- Multi card reader device or External HDD can not be used for USB recording.
- A file is recorded by about 512Mbyte when you record for a long term.
- You may not store more than 2000 files.
- You can not record in AUTO DJ mode.
- In case of the unsupported MP3/WMA file, the file recording may be stopped.

## Note

- It'll be stored as follows.

| AUDIO CD | MP3/WMA | MIX mode |
|---|---|---|
| CD_REC<br>TRACK_0001<br>TRACK_0002<br>: | FILE_REC<br>ABC(File name)<br>DEF(File name)<br>: | DJ_MIX_REC<br>MIX_0001<br>MIX_0002<br>: |
| The other source* | Tuner | |
| OTHERS_REC<br>AUDIO_0001<br>AUDIO_0002<br>: | TUNER_REC<br>AUDIO_0001_107-7FM<br>: | |

* : AUX and the like.
Tuner : The current recording frequency is shown.

## Note

**Normal mode**

- You can check the recording percentage rate for the USB record on the display window during the recording. (MP3/WMA file or Audio CD Only)
- During recording MP3/WMA, there is no sound.
- On CD function, sound of MIC, DJ Pro, Scratch, DJ Effect, PARTY THRUST sound is recorded only during AUDIO CD X1 speed REC. It is recorded AUDIO CD source too.
- When you stop recording during playback, the file that has been recorded at that time will be stored.(Except MP3/WMA file)

**MIXER ON mode**

- When Function is set to BLUETOOTH or LG TV, recording is available in MIXER ON mode.

# JUKE BOX Playback

JUKE BOX function enables you to make a playlist of your favorite tracks/files from a disc or USB device (USB 1). A playlist of up to 100 tracks/files can be entered.

## Making JUKE BOX list

It is supported only on stop status.

1. Press and hold **JUKEBOX / MEMORY** on the remote control to enter the edit mode.
2. Select a track/file by pressing **⏮ / ⏭** on the remote control or by turning **SCRATCH/LEVEL CONTROL**, **SEARCH KNOB** on the **A SIDE** of the unit.
3. Press **JUKEBOX / MEMORY** to save the track/file.
4. Repeat steps 2 - 3 to store other tracks/files. (You can modify the list by pressing **PRESET·FOLDER ∧/∨** on the remote control to select the JUKE BOX program number.)
5. Press **JUKEBOX / MEMORY** once again.

To play the JUKE BOX list, press **▶/❚❚** after you make the list.

**Note**

When making or modifying the JUKE BOX list, REPEAT mode is off.

## Enjoying JUKE BOX

Press **JUKEBOX / MEMORY** twice on stop status. "JUKE BOX ON" appears on the display window. To play JUKE BOX list, press **▶/❚❚** on the remote control or **>❚❚** on the unit.

To cancel it, press **JUKEBOX / MEMORY** twice. "JUKE BOX OFF" appears on the display window.

## Editing JUKE BOX

It is supported only on stop status.

1. Press and hold **JUKEBOX / MEMORY** on the unit to enter the edit mode.
2. Press **PRESET·FOLDER ∧/∨** on the remote control to select a track/file to edit.
3. Press **⏮ / ⏭** to save the track/file.
4. Press **JUKEBOX / MEMORY**.
5. Repeat 2 to 3 to store the other tracks/files.
6. Press **JUKEBOX / MEMORY** once again.

To play the **JUKE BOX** list, press **▶/❚❚** after you edit the list.

## Deleting JUKE BOX list

Deleting function only works in the edit mode.

1. Press and hold **JUKEBOX / MEMORY** on the remote control to enter the edit mode.
2. Select a song by pressing **PRESET·FOLDER ∧/∨** on the remote control repeatedly.
3. Press **DELETE** while a song is selected.

**Note**

- To check the status of JUKE BOX, press **JUKEBOX / MEMORY** once. You can also check it by the word "PROG." on the display window.
- If there is no JUKE BOX list, "JUKE BOX NONE" appears on the display window when you press **JUKEBOX / MEMORY**.
- JUKE BOX is switched off in the case below.
  - Changing to a different function.
  - Turning off and on the unit.
  - Operating the numerical buttons on the remote control.
  - Playing a file by using **SEARCH** and **SCRATCH/LEVEL CONTROL, SEARCH KNOB**.
- JUKE BOX list is cleared in the case below.
  - Removing the disc or the USB device.
  - Deleting or recording music files in the USB device.

# Other Operations

## Turn off the sound temporarily

Press 🔇 on the remote control to mute your unit.

You can mute your unit, for example, to answer the telephone, the mute icon "🔇" is blinked in the display window.

To cancel it, press 🔇 again or change the volume level.

## CHILDSAFE Mode

This function helps to prevent you from being surprised when you turn on the unit in case that the volume of the unit is set at a high level.

To turn on CHILDSAFE mode, press and hold **OK** on the unit when the volume of the unit is "MIN".

In CHILDSAFE mode, the volume increase gradually.

To turn off CHILDSAFE mode, press and hold **OK** on the unit when the volume of the unit is "MIN" and this mode is turned on.

**Note**

In case of CD, USB or BT function, CHILDSAFE mode does not work after about 2 minutes from power on the unit even if this mode is enabled.

## Displaying file information (ID3 TAG)

While playing an MP3 file containing file information, you can display the information by pressing **INFO / SLEEP**.

## DEMO

In the power off state, press **USB REC / DEMO** on the unit once. The unit will power on and display the each of functions with demo sound in the display window. To cancel the DEMO function, press **USB REC / DEMO** once more.

**Note**

- While in DEMO, this unit will keep DEMO status even if you unplug the power cord connection.
- You can enjoy other functions during the DEMO, the DEMO will temporarily pause.
  - Without input key in 10 sec, the DEMO will play back automatically.

## Using Microphone

1. Connect your microphone to the MIC jack.
2. Play the music you want.
3. Sing along with the accompaniment. Adjust the microphone volume by pressing **MIC VOLUME** and rotating **VOLUME** clockwise or counterclockwise on the unit.

**Note**

- When not using the microphone, set the **VOLUME** to minimum or turn off the MIC and remove the microphone from the MIC jack.
- If the microphone is set too near the speaker, a howling sound may be produced. In this case, move the microphone away from the speaker or decrease the sound level by pressing **MIC VOLUME** and rotating **VOLUME**.
  If howling occurs continuously, the protection may apply to this unit. In this case, remove the power cord of this unit, then connect the power cord of this unit and turn on this unit.
- If sound through the microphone is extremely loud, it may be distorted. In this case, press **MIC VOLUME** and rotate **VOLUME** to minimum.
- If your microphone's sound feels not loud though MIC volume is max, you can adjust only audio source volume lower.
  - Follow below step.
    1. Press and hold **VOICE CANCELLER** on the unit.
    2. Reduce Audio Source Volume by rotating **VOLUME** counter-clockwise on the unit.
       To initialize it, power off.

## Using H/P MODE

Headphone monitoring is available.

Press **H/P MODE** to listen to music using Headphone. Press **H/P VOLUME** and rotate **VOLUME** to adjust the volume.

When mixing, press **H/P MODE** to select a monitoring mode. You can listen to the music being mixed or playing in Source A or Source B.

**Note**

- It is not compatible with a 4 pole jack.

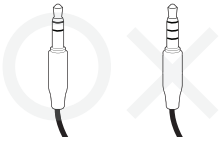

- If you select one source output in MIXER ON mode, the playback effects (Except TEMPO) are not applied to the output through the headphone.
- If you power off or switch to MIXER OFF, the selected H/P MODE is cancelled.

## VOICE CANCELLER

You can enjoy the function while playing the music, by reducing singer vocal of music in the various source.

Press the **VOICE CANCELLER** , and "ON" will appear in display window.

To cancel it, press **VOICE CANCELLER** again.

The quality of the **VOICE CANCELLER** may be different depending on the recording conditions of music files.

**Note**

- This function is available CD, USB or BT (Bluetooth) Function.
- If the function is not available, "NOT SUPPORT" appears in the display window.
- This function is available to use only when a microphone is connected.
- If a microphone is not connected, "NOT SUPPORT" appears in the display window.
- It is not available on the MONO source.
- To initialize it, change the Function or disconnect the microphone.
- This function may not be initialized depending on the status of connected devices.

## KEY CHANGER

You can adjust the key to 9 steps (4 steps higher, 4 steps lower and the original key).

- To sharp the key one by one, press the KEY CHANGER(#) repeatedly during playback.
- To flatten the key one by one, press the KEY CHANGER( ♭ ) repeatedly during playback.

**Note**

- This function is available CD, USB or BT (Bluetooth) Function.
- If a microphone is not connected, "NOT SUPPORT" appears in the display window.
- To initialize it, change the Function, disconnect the microphone or change the music.
- This function may not be initialized depending on the status of connected devices.

## Lighting Effects

This function offers a party atmosphere by operating the lighting ball on the unit and the lighting on the speakers.

Press **LIGHTING** on the unit.

OFF → PEACEFUL → ROMANTIC → COOL → UPBEAT → FIERY → EXCITED → DYNAMIC → HEALING → SUNNY → PARTY → OFF ...

**Note**

- Lighting function is available in all functions.
- Lighting mode retains its previous mode when you first press **LIGHTING**, press again to change modes.

## PARTY THRUSTER

Slide the lever to create a party atmosphere.

PARTY THRUST OFF → PARTY THRUST 1 → PARTY THRUST 2 → PARTY THRUST CLIMAX

The lighting ball on the unit, the lighting on the speakers, the LED lighting and the sound effect will react according to moving the lever of **PARTY THRUSTER**.

# Setting the Clock

1. Turn the unit on.
2. Press and hold **CLOCK**.
3. Select time mode by pressing **⏮ / ⏭** on the remote control.
   - AM 12:00 (for an AM and PM display) or 0:00 (for a 24 hour display)
4. Press **SET** to confirm your selection.
5. Select the hours by pressing **⏮ / ⏭** on the remote control.
6. Press **SET**.
7. Select the minutes by pressing **⏮ / ⏭** on the remote control.
8. Press **SET**.

## Setting the Clock through "Music Flow Bluetooth" App

Install "Music Flow Bluetooth" app on your Android device. (Refer to page 24)

Your unit's clock will be automatically synchronized with your device by activating **Bluetooth** connection through "Music Flow Bluetooth" app.

## Using your player as an alarm clock

1. Turn the unit on.
2. Press and hold **ALARM**.
3. Press **⏮ / ⏭** on the remote control to change the hours and minutes and press **SET** to save.
4. Press **⏮ / ⏭** on the remote control to select function and press **SET** to save.
   - Press **⏮ / ⏭** on the remote control to select a memory No. when you select Tuner and then, press **SET**.
   If there is no memory No., this step is skipped.
5. Press **⏮ / ⏭** on the remote control to change the volume and press **SET** to save. The clock icon "🕒" shows that the alarm is set.

**Note**

- If you set the clock time, you can check the time by pressing **CLOCK** even when the player is turned off.
- You can set alarm after you set the clock time.
- If you set the clock time and alarm, you can check the alarm icon "◷" by pressing **CLOCK** even when the unit is turned off.
- If you set the clock time and alarm, you can check the alarm icon "◷" and alarm setting information by pressing **ALARM** even when the unit is turned off.
- You can select ALARM ON/OFF mode by pressing **ALARM**.

## Sleep Timer Setting

1. Press and hold **INFO / SLEEP**. The display window will be darkened by half.
2. Press **INFO / SLEEP** repeatedly to select delay time between 10 and 180 minutes. After the delay time, the unit will be turned off.

To cancel the sleep function, press **INFO / SLEEP** repeatedly until "SLEEP 10" appears, and then press **INFO / SLEEP** once again while "SLEEP 10" is displayed.

**Note**

- You can check the remaining time before the unit is turned off.
- Press and hold **INFO / SLEEP** to check or change the remaining time.
- You can edit the remain time when displays the remaining time or "DIMMER".

## Dimmer

Press and hold **INFO / SLEEP**. The display window will be darkened by half. To cancel it, press and hold **INFO / SLEEP** and then press it repeatedly until dim off.

**Note**

All the LED turns off when Dimmer is being operated.

# Auto power down

This unit will turn itself off to save electricity in the case were the main unit is not connected to an external device and is not used for 20 minutes.
The unit will also turn itself off after six hours if the Main unit has been connected to another device using the analog inputs.
Auto power down function is applied to only MASTER unit in case of WIRELESS PARTY LINK connection.
In case of SLAVE unit, Auto power down is available after disconnection SLAVE unit and MASTER unit.

### How to disconnect the wireless network connection or the wireless device.

Turn off the unit by pressing the power button for more than 5 seconds.

## AUTO POWER On

This unit automatically turns on by an input source : LG TV or **Bluetooth**

If you try to connect your **Bluetooth** device, this unit turns on and connects your **Bluetooth** device. You can play your music.

**Note**

- Depending on the connected device, this function may not operate.
- Depending on the connected device, the unit turns on but **Bluetooth** function may not be connected.
- If you disconnect **Bluetooth** connection by this unit, some **Bluetooth** devices try to connect to the unit continually. Therefore it is recommended to disconnect the connection before turning off the unit.
- If you try to connect to the "Music Flow Bluetooth" app, **Bluetooth** function of this unit is turned on.
- If you turn on the unit using LG TV or **Bluetooth** function, proper function of this unit is turned on.
- If you have already paired with this unit, automatically this unit can turn on by an input source when this unit is turned off.
- If you turn off the unit by pressing the power button for more than 5 seconds, Auto Power On function is disabled. To activate it, turn on the unit.

## Auto function change

This unit recognizes input signals such as **Bluetooth** and LG TV or connected portable device, and then changes suitable function automatically.

### When you try to connect Bluetooth device

When you try to connect your **Bluetooth** device to this unit, **Bluetooth** function is selected. Play your music on the **Bluetooth** device.

### When PORT.IN connection is connected

When you connect the portable device to the PORT. IN connector, PORTABLE function is selected. Play your music on the portable device.

### When LG TV is connected

When you turn on your LG TV connected by LG Sound Sync, this unit changes the function to LG TV. You can hear the sound from your TV.

**Note**

- This function is not available during recording or deleting.
- This function only works with devices that were previously connected.

# LG Sound Sync

Sound Sync
Wireless

You can control some functions of this unit by your TV's remote control with LG Sound Sync. It is compatible with LG TV that supports LG Sound Sync. Make sure your TV has the LG Sound Sync logo.

Controllable function by LG TV's remote control : Volume up/down, mute

Refer to the TV's instruction manual for the details of LG Sound Sync.

1. Turn on the unit by pressing ⏻ on the remote control or ⏻/❙ on the unit.
2. Press **F / WIRELESS LINK** on the unit or **F** on the remote control until LG TV function is selected.
3. Set up the sound output of TV to listen to the sound through this unit :
   TV setting menu [Sound] -> [TV Sound output] -> [LG Sound Sync (Wireless)]
   When the TV is not connected, "LG TV READY" appears on the display window.
   If the TV and this unit are connected normally, "LG TV PAIRED" will be appear on the display window.

**Note**

- You can also use the remote control of this unit while using LG Sound Sync. If you use TV's remote control again, the unit synchronizes with the TV.
- If the connection fails, check the conditions of this unit and your TV : power, function.
- Make sure of the condition of this unit and the connection in the cases below when using LG Sound Sync.
  - Turn off the unit.
  - Changing to a different function.
  - Disconnecting the wireless connection caused by interference or a distance.
- The amount of time to turn off this unit is different depending on your TV.
- If you try to change the function on using the LG TV function, volume will be change according to the LG TV volume level.
- Details of TV setting menu vary depending on the manufacturers or models of your TV.
- If you connect LG Sound Sync when "Music Flow Bluetooth" app is connected, control through the app is available.
- If you turned off the unit directly by pressing ⏻ on the remote control or ⏻/❙ on the unit, LG Sound Sync will be disconnected. To use this function again, you should reconnect the TV and the unit.
- If an LG TV is connected when using **Bluetooth**, **Bluetooth** is disconnected and the LG TV is connected.
- The volume may be increased when the TV and this unit is connected by LG Sound Sync. Decrease the TV volume and then connect with this unit.

# WIRELESS PARTY LINK Connection

The output sound of Ⓐ(MASTER) unit is expanded to Ⓑ(SLAVE) unit.
It is compatible with unit that supports WIRELESS PARTY LINK.

The name of function about sound expansion between the compatible products wired or wirelessly was changed to PARTY LINK or WIRELESS PARTY LINK.

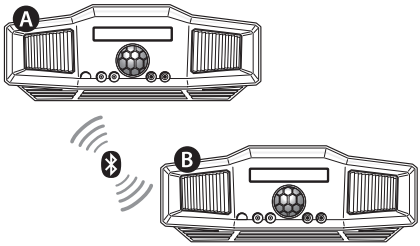


1. Press and hold **F / WIRELESS LINK** on the unit for 3 seconds. PARTY LINK MODE SELECT appears in the display window.
2. Rotate **|<<** / **>>|** on the unit to select MASTER or SLAVE.
   - Ⓐ unit : Selects MASTER.
   - Ⓑ unit : Selects SLAVE.

   Two units try to connect with each other.
3. When this unit is successfully connected each other, "Slave Device Name CONNECTED" appears in the MASTER unit. "CONNECTED TO Master Device Name" appears in the SLAVE unit and change to SLAVE soon.

**Note**

- If you using the LG Sound Sync, this function is not available. If you connect the LG TV Function, "NOT SUPPORT" appears in the display window.
- You can use microphone in the SLAVE unit only. In case of SLAVE unit, some functions are supported only.
- When WIRELESS PARTY LINK is disconnected, SLAVE unit is changed to BT function.
- If the connection is failed, "FAILED" appears in the display window.
- Mute function is synchronized with each other.
- WIRELESS PARTY LINK connection will be disconnected when you turn off the unit or press and hold the **F / WIRELESS LINK** on the unit for 3 seconds.
- Sound of MASTER unit and SLAVE unit may be different depending on playback staus or source.
- Check the following information when connecting to Bluetooth.
  - You can connect only one **Bluetooth** device in the MASTER unit. You cannot connect Bluetooth device to the SLAVE unit.
  - WIRELESS PARTY LINK connection is only supported on Android or iOS devices. (WIRELESS PARTY LINK connection may not be supported depending on the connected device specifications or OS.)
  - Removable/detachable Bluetooth devices (ex. Dongle etc.) will not support WIRELESS PARTY LINK connection.
  - When WIRELESS PARTY LINK is connected, Bluetooth connection is not available in status of recording or deleting.

# Troubleshooting

## General

| Problem | Cause & Solution |
|---|---|
| The unit does not work properly. | • Turn off the power of this unit and the connected external device (TV, Woofer, DVD-player, Amplifier, etc.) and turn it on again.<br>• Disconnect the power cord of this unit and the connected external device (TV, Woofer, DVD-player, Amplifier, etc.) and then try connecting again.<br>• Previous setting may not be saved when device power is shut off. |
| No Power. | • The power cord is not plugged in. Plug in the power cord.<br>• Check whether electricity failed.<br>Check the condition by operating other electronic devices. |
| No sound. | • Check whether you select right function.<br>Press function button and check the selected function.<br>• Check to see if the Speakers are connected correctly. Speaker cables connected correctly. |
| The unit does not start playback. | • An unplayable disc is inserted. Check the playable disc.<br>• No disc is inserted. Insert a disc.<br>• The disc is dirty. Clean the disc. (Refer to page 42)<br>• The disc is inserted upside down.<br>Place the disc with the label or printed side facing upwards. |
| Radio stations cannot be tuned in properly. | • The antenna is positioned or connected poorly.<br>Connect the antenna securely.<br>• The signal strength of the radio station is too weak.<br>Tune to the station manually.<br>• No stations have been preset or preset stations have been cleared (when tuning by scanning preset channels).<br>Preset some radio stations, see page 26 for details. |

| Problem | Cause & Solution |
|---|---|
| The remote control does not work properly. | • The remote control is too far from the unit.<br>Operate the remote control within about 23 ft (7 m).<br>• There is an obstacle in the path of the remote control and the unit.<br>Remove the obstacle.<br>• The batteries in the remote control are exhausted.<br>Replace the batteries with new ones. |
| No speaker light | • Check whether the speaker light cables are connected to the unit correctly.<br>Connect the speaker light cables to the unit correctly.<br>• Check the speaker light effects by pressing **LIGHTING**. |
| LG Sound Sync does not work. | • Check whether your LG TV supports LG Sound Sync.<br>• Check connection of LG Sound Sync.<br>• Check sound setting of your TV and this unit. |

# General specifications

| General | |
|---|---|
| Power requirements | Refer to the main label on the unit. |
| Power consumption | Refer to the main label on the unit. |
| | Networked standby : 0,5 W<br>(If all network ports are activated.) |
| Dimensions (W x H x D) | Approx. 470 mm x 240 mm x 420 mm |
| Net Weight | Approx. 7,7 kg |
| Operating temperature | 5 °C to 35 °C (41 °F to 95 °F) |
| Operating humidity | 60 % |

| Inputs | |
|---|---|
| Analog audio in (AUX IN) | 2,0 Vrms (1 kHz, 0 dB), 600 Ω, RCA jack (L, R) |
| Portable in (PORT. IN) | 1.4 Vrms (3.5 mm stereo jack) x 1 |
| Microphone (MIC 1/2) | Sensitivity 20 mV (1 kHz), 6.3 mm jack x 2 |

| Tuner | |
|---|---|
| FM Tuning Range | 87,5 to 108.0 MHz or 87,50 to 108,00 MHz |

| System | |
|---|---|
| Frequency Response | 40 to 20,000 Hz |
| Signal-to-noise ratio | More than 75 dB |
| Dynamic range | More than 80 dB |
| Bus Power Supply (USB) | 5 V ⎓ 500 mA |

| Amplifier (RMS Output power) | |
|---|---|
| Total output | 4,800 W |
| HIGH | 1200 W X 2 (8 Ω at 1 kHz, 25 % THD) |
| LOW | 1200 W X 2 (8 Ω at 70 Hz, 25 % THD) |

- Design and specifications are subject to change without notice.

# Speakers specifications

| Front speaker | |
|---|---|
| Type | HIGH : 3 Way 3 Speaker<br>LOW : 1 Way 1Speaker |
| Impedance | HIGH : 8 Ω<br>LOW : 8 Ω |
| Rated Input Power | HIGH : 1200 W<br>LOW : 1200 W |
| Max. Input power | HIGH : 2400 W<br>LOW : 2400 W |
| Net Dimensions (W x H x D) | Approx. 508 mm x 711 mm x 470 mm |
| Net Weight | Approx. 30.2 kg |

- Design and specifications are subject to change without notice.

# Trademarks and Licenses

Bluetooth®

The **Bluetooth®** word mark and logos are owned by the **Bluetooth®** SIG, Inc. and any use of such marks by LG Electronics is under license.

Other trademarks and trade names are those of their respective owners.

# Maintenance

## Notes on Discs

### Handling Discs

Never stick paper or tape on the disc.

### Storing Discs

After playing, store the disc in its case. Do not expose the disc to direct sunlight or sources of heat and never leave it in a parked car exposed to direct sunlight.

### Cleaning Discs

Fingerprints and dust on the disc can cause poor picture quality and sound distortion. Before playing, clean the disc with a clean cloth. Wipe the disc from the center to out.

Do not use strong solvents such as alcohol, benzine, thinner, commercially available cleaners, or anti-static spray intended for old vinyl records.

## Handling the Unit

### When shipping the unit

Please save the original shipping carton and packing materials. If you need to ship the unit, for maximum protection, re-pack the unit as it was originally packed at the factory.

### Keeping the exterior surfaces clean

Do not use volatile liquids such as insecticide spray near the unit. Wiping with strong pressure may damage the surface. Do not leave rubber or plastic products in contact with the unit for a long period of time.

### Cleaning the unit

To clean the player, use a soft, dry cloth. If the surfaces are extremely dirty, use a soft cloth lightly moistened with a mild detergent solution. Do not use strong solvents such as alcohol, benzine, or thinner, as these might damage the surface of the unit.

### Maintaining the Unit

The unit is a high-tech, precision device. If the optical pick-up lens and disc drive parts are dirty or worn, the picture quality could be diminished. For details, please contact your nearest authorized service center.

LG

Life's Good