LG
Life's Good

LED TV
UX96**

www.lg.com

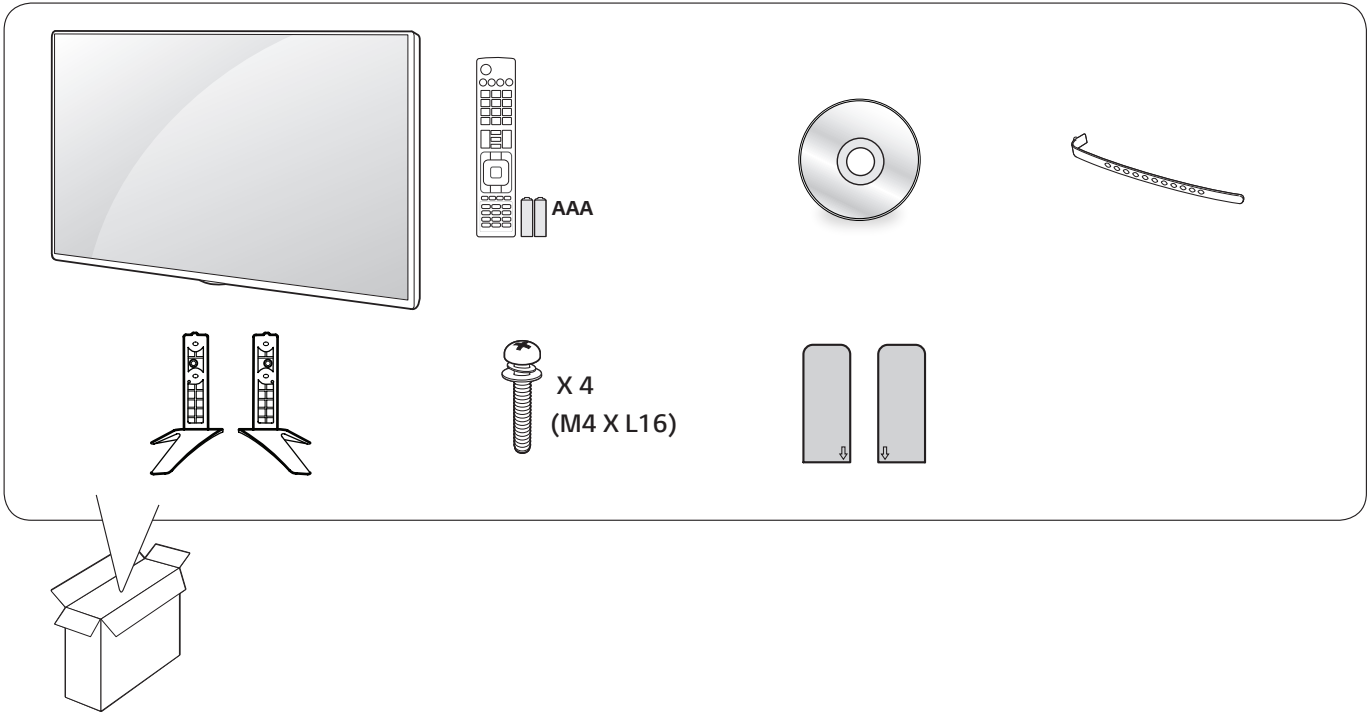

English

- Read **Safety and Reference.**
- For the power supply and power consumption, refer to the label attached to the product.

العربية

- قراءة **الأمان والمرجع.**
- لمعرفة المزيد حول مصدر الإمداد بالطاقة المطلوب ومعايير استهلاك الطاقة، راجع الملصق الموجود على المنتج.

1

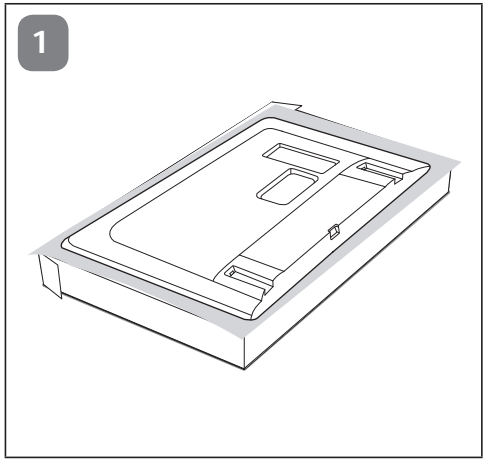

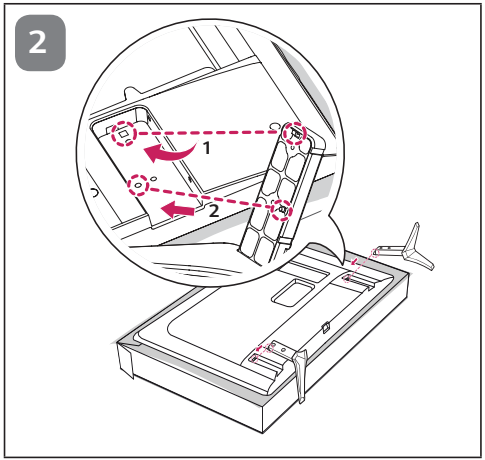

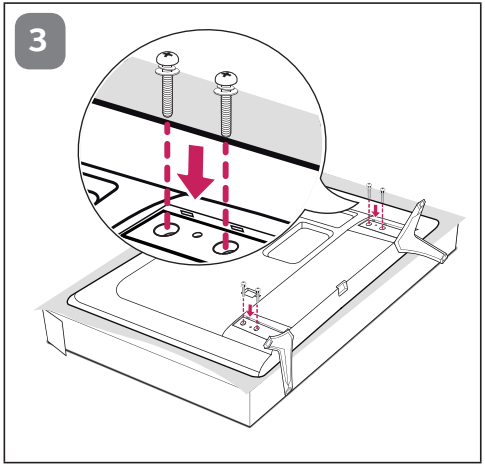

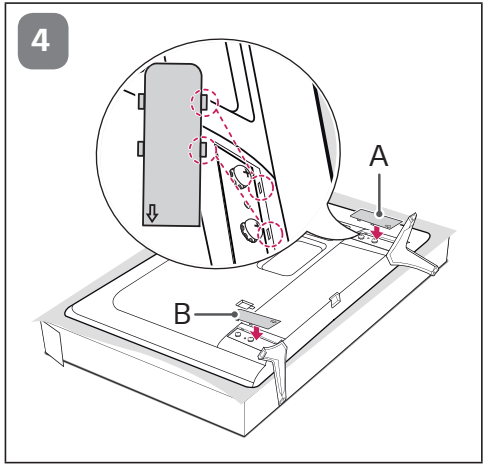

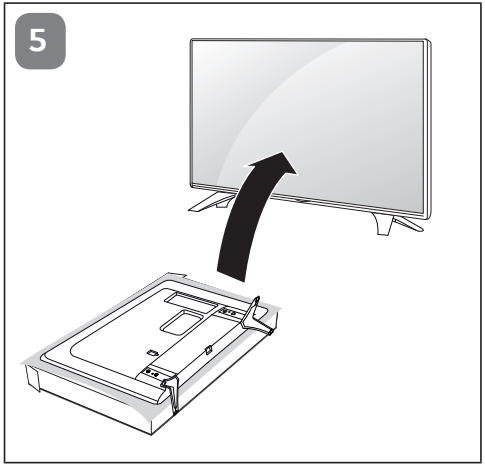

2

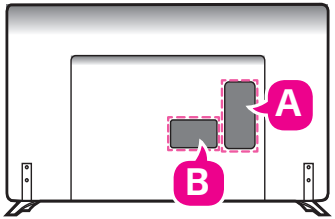
A
B

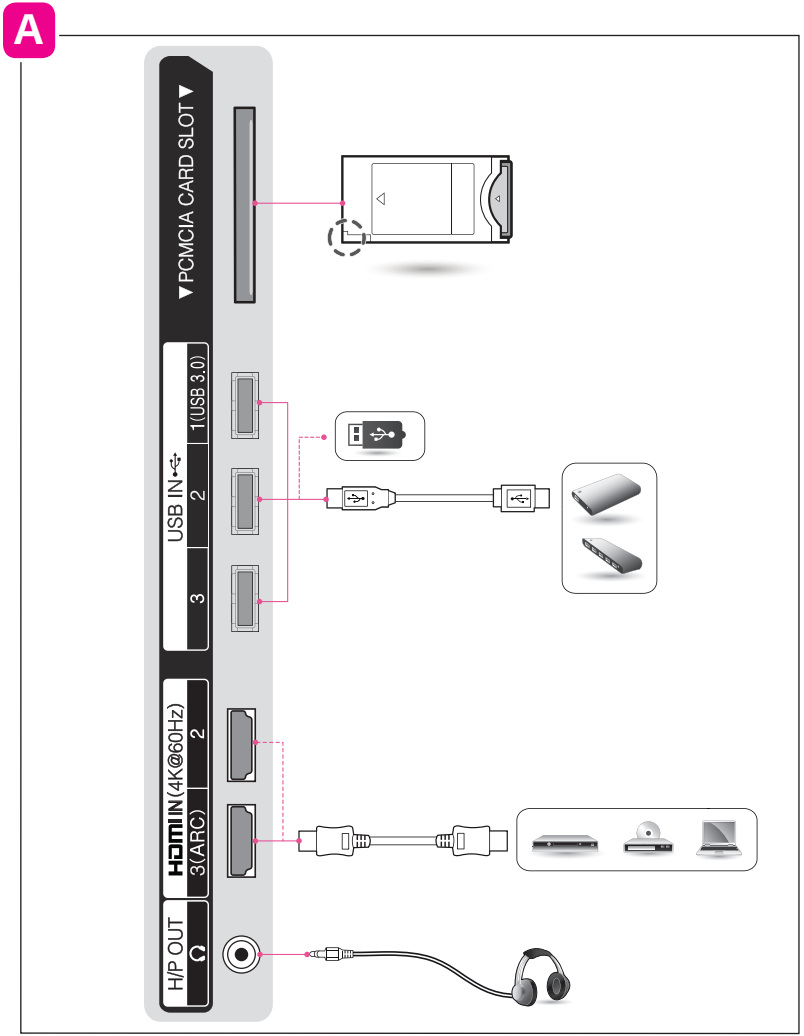
A
H/P OUT
HDMI IN (4K@60Hz)
3(ARC)
2
USB IN
3
2
1(USB 3.0)
▼PCMCIA CARD SLOT▼

B

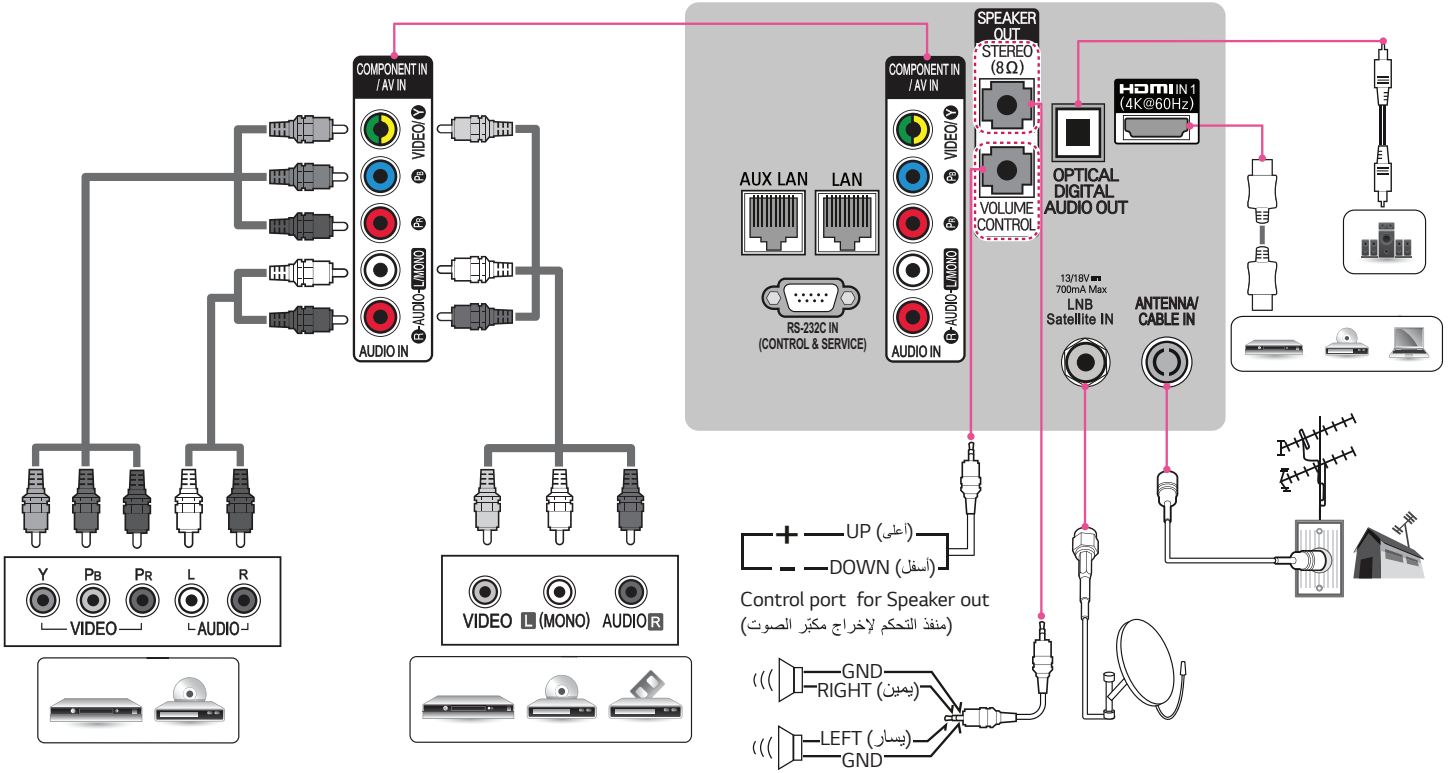
COMPONENT IN / AV IN
VIDEO
AUDIO IN
Y
PB
PR
L
R
VIDEO
AUDIO
VIDEO
L (MONO)
AUDIO R
SPEAKER OUT
STEREO (8Ω)
VOLUME CONTROL
AUX LAN
LAN
RS-232C IN (CONTROL & SERVICE)
HDMI IN 1 (4K@60Hz)
OPTICAL DIGITAL AUDIO OUT
13/18V 700mA Max
LNB Satellite IN
ANTENNA/ CABLE IN
UP (أعلى)
DOWN (أسفل)
Control port for Speaker out
(منفذ التحكم لإخراج مكبّر الصوت)
GND
RIGHT (يمين)
LEFT (يسار)
GND

3

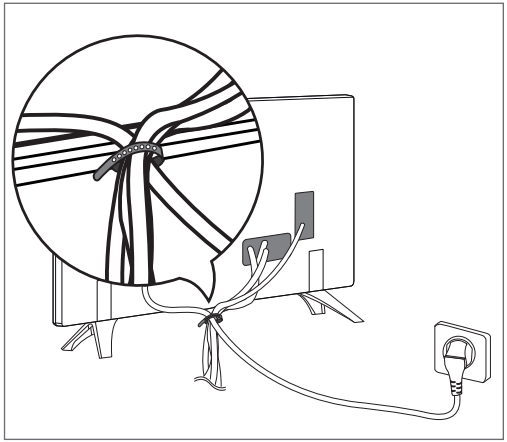

4

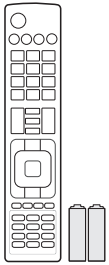

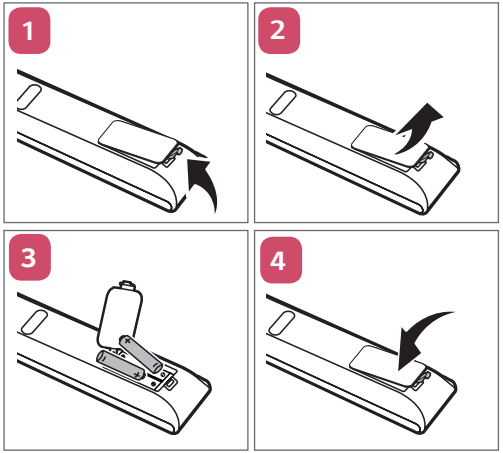

5

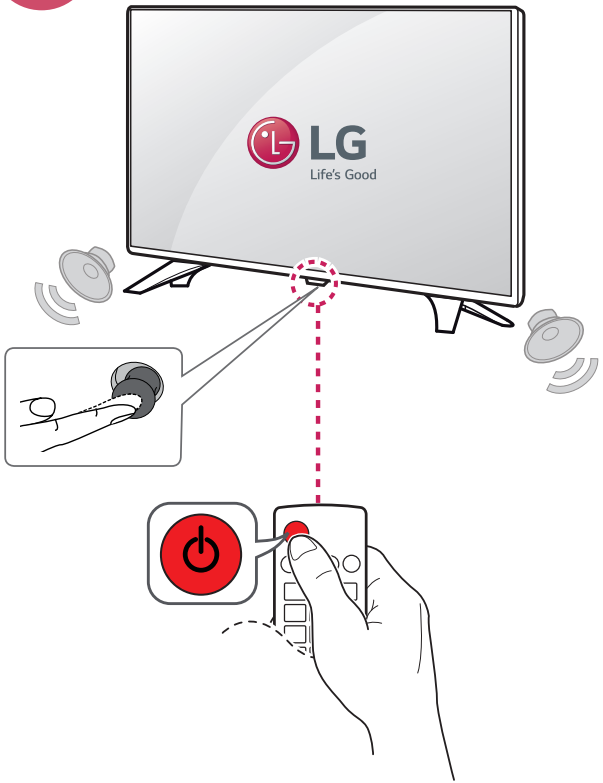

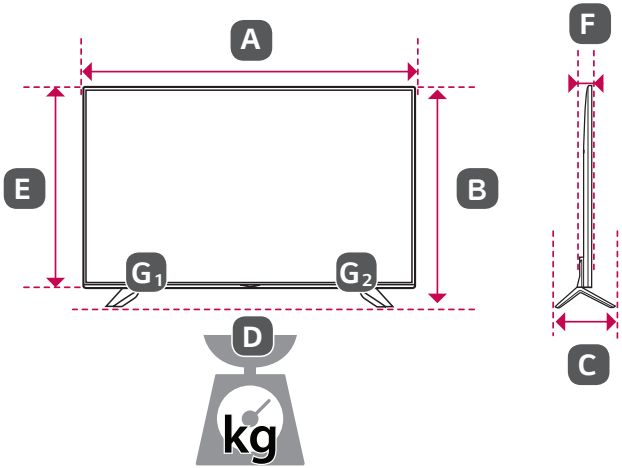

	79UX960H-GA
A x B x C (mm)	1770.4 X 1083.2 X 317
A x E x F (mm)	1770.4 X 1025.2 X 59.5
D (kg)	54.5
D - (G1 + G2) (kg)	52.4
Power requirement / متطلبات الطاقة	AC 100-240 V ~ 50 / 60 Hz تيار متردد 100 - 240 فولت ~ 50 / 60 هرتز

LG
Life's Good

OWNER'S MANUAL

Safety and Reference

LED TV*

* LG LED TV applies LCD screen with LED backlights.

Please read this manual carefully before operating your set and retain it for future reference.

www.lg.com

Safety instructions

Please read these safety precautions carefully before using the product.

⚠ WARNING

Do not place the TV and/or remote control in the following environments:

- A location exposed to direct sunlight
- An area with high humidity such as a bathroom
- Near any heat source such as stoves and other devices that produce heat
- Near kitchen counters or humidifiers where they can easily be exposed to steam or oil
- An area exposed to rain or wind
- Near containers of water such as vases

Otherwise, this may result in fire, electric shock, malfunction or product deformation.

Do not place the product where it might be exposed to dust. This may cause a fire hazard.

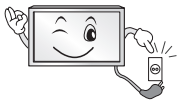

Mains Plug is the TV connecting/disconnecting device to AC mains electric supply. This plug must remain readily attached and operable when TV is in use.

Do not touch the power plug with wet hands. Additionally, if the cord pin is wet or covered with dust, dry the power plug completely or wipe dust off. You may be electrocuted due to excess moisture.

Make sure to connect Mains cable to compliant AC mains socket with Grounded earth pin. (Except for devices which are not grounded on earth.) Otherwise possibility you may be electrocuted or injured.

Insert power cable plug completely into wall socket otherwise if not secured completely into socket, fire ignition may break out.

Ensure the power cord does not come into contact with hot objects such as a heater. This may cause a fire or an electric shock hazard.

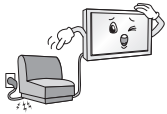

Do not place a heavy object, or the product itself, on power cables. Otherwise, this may result in fire or electric shock.

Bend antenna cable between inside and outside building to prevent rain from flowing in. This may cause water damaged inside the Product and could give an electric shock.

When mounting TV onto wall make sure to neatly install and isolate cabling from rear of TV as to not create possibility of electric shock / fire hazard.

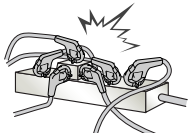

Do not plug too many electrical devices into a single multiple electrical outlet. Otherwise, this may result in fire due to over-heating.

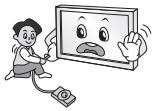

Do not drop the product or let it fall over when connecting external devices. Otherwise, this may result in injury or damage to the product.

Keep the anti-moisture packing material or vinyl packing out of the reach of children. Anti-moisture material is harmful if swallowed. If swallowed by mistake, force the patient to vomit and visit the nearest hospital. Additionally, vinyl packing can cause suffocation. Keep it out of the reach of children.

Do not let your children climb or cling onto the TV.
Otherwise, the TV may fall over, which may cause serious injury.

Dispose of used batteries carefully to ensure that a small child does not consume them. Please seek Doctor- Medical Attention immediately if child consumes batteries.

Do not insert any metal objects/conductors (like a metal chopstick/ cutlery/screwdriver) between power cable plug and input Wall Socket while it is connected to the input terminal on the wall. Additionally, do not touch the power cable right after plugging into the wall input terminal. You may be electrocuted. (Depending on model)

Do not put or store inflammable substances near the product. There is a danger of combustion/explosion or fire due to careless handling of the inflammable substances.

Do not drop metallic objects such as coins, hair pins, chopsticks or wire into the product, or inflammable objects such as paper and matches. Children must pay particular attention. Electrical shock, fire or injury can occur. If a foreign object is dropped into the product, unplug the power cord and contact the service centre.

Do not spray water on the product or scrub with an inflammable substance (thinner or benzene). Fire or electric shock accident can occur.

Do not allow any impact, shock or any objects to fall into the unit, and do not drop anything onto the screen. You may be injured or the product can be damaged.

Never touch this product or antenna during a thunder or lighting storm. You may be electrocuted.

Never touch the wall outlet when there is leakage of gas, open the windows and ventilate. It may cause a fire or a burn by a spark.

Do not disassemble, repair or modify the product at your own discretion. Fire or electric shock accident can occur.
Contact the service centre for check, calibration or repair.

If any of the following occur, unplug the product immediately and contact your local service centre.

- The product has been impacted by shock
- The product has been damaged
- Foreign objects have entered the product
- The product produced smoke or a strange smell

This may result in fire or electric shock.

Unplug the TV from AC mains wall socket if you do not intend to use the TV for a long period of time. Accumulated dust can cause fire hazard and insulation deterioration can cause electric leakage/shock/fire.

Apparatus shall not be exposed to dripping or splashing and no objects filled with liquids, such as vases, shall be placed on the apparatus.

Do not install this product on a wall if it could be exposed to oil or oil mist. This may damage the product and cause it to fall.

If water enters or comes into contact with TV, AC adapter or power cord please disconnect the power cord and contact service centre immediately. Otherwise, this may result in electric shock or fire.

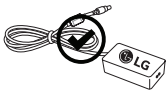

Only use an authorized AC adapter and power cord approved by LG Electronics. Otherwise, this may result in fire, electric shock, malfunction or product deformation.

Never Disassemble the AC adapter or power cord. This may result in fire or electric shock.

⚠ CAUTION

Install the product where no radio wave occurs.

There should be enough distance between an outside antenna and power lines to keep the former from touching the latter even when the antenna falls. This may cause an electric shock.

Do not install the product on places such as unstable shelves or inclined surfaces. Also avoid places where there is vibration or where the product cannot be fully supported. Otherwise, the product may fall or flip over, which may cause injury or damage to the product.

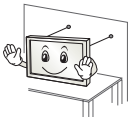

If you install the TV on a stand, you need to take actions to prevent the product from overturning. Otherwise, the product may fall over, which may cause injury.

If you intend to mount the product to a wall, attach VESA standard mounting interface (optional parts) to the back of the product. When you install the set to use the wall mounting bracket (optional parts), fix it carefully so as not to drop.

Only use the attachments / accessories specified by the manufacturer.

When installing the antenna, consult with a qualified service technician. If not installed by a qualified technician, this may create a fire hazard or an electric shock hazard.

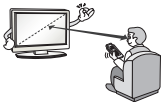

We recommend that you maintain a distance of at least 2 to 7 times the diagonal screen size when watching TV. If you watch TV for a long period of time, this may cause blurred vision.

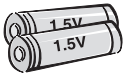

Only use the specified type of battery. This could cause damage to the remote control.

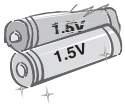

Do not mix new batteries with old batteries. This may cause the batteries to overheat and leak.

Batteries should not be exposed to excessive heat. For example, keep away from direct Sunlight , open fireplace and electric heaters.

Do not place non-rechargeable batteries in charging device.

Make sure there are no objects between the remote control and its sensor.

Signal from Remote Control can be interrupted due to external/internal lighting eg Sunlight, fluorescent lighting. If this occurs turn off lighting or darken viewing area.

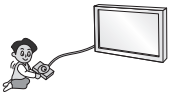

When connecting external devices such as video game consoles, make sure the connecting cables are long enough. Otherwise, the product may fall over, which may cause injury or damage the product.

Do not turn the product On/Off by plugging-in or unplugging the power plug to the wall outlet. (Do not use the power plug for switch.) It may cause mechanical failure or could give an electric shock.

Please follow the installation instructions below to prevent the product from overheating.

- The distance between the product and the wall should be more than 10 cm.
- Do not install the product in a place with no ventilation (e.g., on a bookshelf or in a cupboard).
- Do not install the product on a carpet or cushion.
- Make sure the air vent is not blocked by a tablecloth or curtain.

Otherwise, this may result in fire.

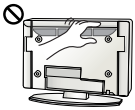

Take care not to touch the ventilation openings when watching the TV for long periods as the ventilation openings may become hot. This does not affect the operation or performance of the product.

Periodically examine the cord of your appliance, and if its appearance indicates damage or deterioration, unplug it, discontinue use of the appliance, and have the cord replaced with an exact replacement part by an authorized servicer.

Prevent dust collecting on the power plug pins or outlet. This may cause a fire hazard.

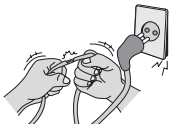

Protect the power cord from physical or mechanical abuse, such as being twisted, kinked, pinched, closed in a door, or walked upon. Pay particular attention to plugs, wall outlets, and the point where the cord exits the appliance.

Do not press strongly upon the panel with a hand or sharp object such as nail, pencil or pen, or make a scratch on it, as it may cause damage to screen.

Avoid touching the screen or holding your finger(s) against it for long periods of time. Doing so may produce some temporary or permanent distortion/damage to screen.

When cleaning the product and its components, unplug the power first and wipe it with a soft cloth. Applying excessive force may cause scratches or discolouration. Do not spray with water or wipe with a wet cloth. Never use glass cleaner, car or industrial shiner, abrasives or wax, benzene, alcohol etc., which can damage the product and its panel. Otherwise, this may result in fire, electric shock or product damage (deformation, corrosion or breakage).

As long as this unit is connected to the AC wall outlet, it is not disconnected from the AC power source even if you turn off this unit by SWITCH.

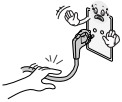

When unplugging the cable, grab the plug and unplug it, by pulling at the plug.

Don't pull at the cord to unplug the power cord from the power board, as this could be hazardous.

When moving the product, make sure you turn the power off first. Then, unplug the power cables, antenna cables and all connecting cables. The TV set or power cord may be damaged, which may create a fire hazard or cause electric shock.

When moving or unpacking the product, work in pairs because the product is heavy. Otherwise, this may result in injury.

Contact the service centre once a year to clean the internal parts of the product.
Accumulated dust can cause mechanical failure.

Refer all servicing to qualified service personnel. Servicing is required when the apparatus has been damaged in any way, such as power supply cord or plug is damaged, liquid has been spilled or objects have fallen into the apparatus, the apparatus has been exposed to rain or moisture, does not operate normally, or has been dropped.

If the product feels cold to the touch, there may be a small "flicker" when it is turned on. This is normal, there is nothing wrong with product.

The panel is a high technology display product with resolution of two million to six million pixels. You may see tiny black dots and/or brightly coloured dots (red, blue or green) at a size of 1 ppm on the panel. This does not indicate a malfunction and does not affect the performance and reliability of the product.
This phenomenon also occurs in third-party products and is not subject to exchange or refund.

You may find different brightness and color of the panel depending on your viewing position(left/right/top/down).
This phenomenon occurs due to the characteristic of the panel. It is not related with the product performance, and it is not malfunction.

Displaying a still image for a prolonged period of time may cause image sticking. Avoid displaying a fixed image on the TV screen for a long period of time.

Generated Sound

"Cracking" noise: A cracking noise that occurs when watching or turning off the TV is generated by plastic thermal contraction due to temperature and humidity. This noise is common for products where thermal deformation is required. Electrical circuit humming/panel buzzing:
A low level noise is generated from a high-speed switching circuit, which supplies a large amount of current to operate a product. It varies depending on the product.
This generated sound does not affect the performance and reliability of the product.

Do not use high voltage electrical goods near the TV (e.g. electric mosquito-swatter). This may result in product malfunction.

Viewing 3D imaging (Only 3D models)

WARNING

Viewing environment

- Viewing Time
  - When watching 3D contents, take 5 - 15 minute breaks every hour. Viewing 3D contents for a long period of time may cause headache, dizziness, fatigue or eye strain.

Those that have a photosensitive seizure or chronic illness

- Some users may experience a seizure or other abnormal symptoms when they are exposed to a flashing light or particular pattern from 3D contents.
- Do not watch 3D videos if you feel nausea, are pregnant and/ or have a chronic illness such as epilepsy, cardiac disorder, or blood pressure disease, etc.
- 3D Contents are not recommended to those who suffer from stereo blindness or stereo anomaly. Double images or discomfort in viewing may be experienced.
- If you have strabismus (cross-eyed), amblyopia (weak eyesight) or astigmatism, you may have trouble sensing depth and easily feel fatigue due to double images. It is advised to take frequent breaks than the average adult.
- If your eyesight varies between your right and left eye, revise your eyesight prior to watching 3D contents.

Symptoms which require discontinuation or refraining from watching 3D contents

- Do not watch 3D contents when you feel fatigue from lack of sleep, overwork or drinking.
- When these symptoms are experienced, stop using/watching 3D contents and get enough rest until the symptom subsides.
  - Consult your doctor when the symptoms persist. Symptoms may include headache, eyeball pain, dizziness, nausea, palpitation, blurriness, discomfort, double image, visual inconvenience or fatigue.

CAUTION

Viewing environment

- Viewing Distance
  - Maintain a distance of at least twice the screen diagonal length when watching 3D contents. If you feel discomfort in viewing 3D contents, move further away from the TV.

Viewing age

- Infants/Children
  - Usage/ Viewing 3D contents for children under the age of 6 are prohibited.
  - Children under the age of 10 may overreact and become overly excited because their vision is in development (for example: trying to touch the screen or trying to jump into it). Special monitoring and extra attention is required for children watching 3D contents.
  - Children have greater binocular disparity of 3D presentations than adults because the distance between the eyes is shorter than that of adults. Therefore they will perceive more stereoscopic depth compared to adults for the same 3D image.
- Teenagers
  - Teenagers under the age of 19 may react with sensitivity due to stimulation from light in 3D contents. Advise them to refrain from watching 3D contents for a long time when they are tired.
- Elderly
  - The elderly may perceive less 3D effect compared to the young. Do not sit closer to the TV than the recommended distance.

Cautions when using the 3D glasses

- Make sure to use LG 3D glasses. Otherwise, you may not be able to view 3D videos properly.
- Do not use 3D glasses instead of your normal glasses, sunglasses or protective goggles.
- Using modified 3D glasses may cause eye strain or image distortion.
- Do not keep your 3D glasses in extremely high or low temperatures. It will cause deformation.
- The 3D glasses are fragile and are easily scratched. Always use a soft, clean piece of cloth when wiping the lenses. Do not scratch the lenses of the 3D glasses with sharp objects or clean/wipe them with chemicals.

Preparing

NOTE

- If the TV is turned on for the first time after it was shipped from the factory, initialization of the TV may take a few minutes.
- Image shown may differ from your TV.
- Your TV's OSD (On Screen Display) may differ slightly from that shown in this manual.
- The available menus and options may differ from the input source or product model that you are using.
- New features may be added to this TV in the future.
- The TV can be placed in standby mode in order to reduce the power consumption. And the TV should be turned off if it will not be watched for some time, as this will reduce energy consumption.
- The energy consumed during use can be significantly reduced if the level of brightness of the picture is reduced, and this will reduce the overall running cost.
- The items supplied with your product may vary depending on the model.
- Product specifications or contents of this manual may be changed without prior notice due to upgrade of product functions.
- For an optimal connection, HDMI cables and USB devices should have bezels less than 10 mm thick and 18 mm width. Use an extension cable that supports USB 2.0 if the USB cable or USB memory stick does not fit into your TV's USB port.

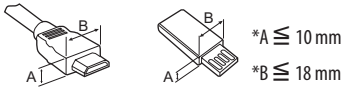

- Use a certified cable with the HDMI logo attached.
- If you do not use a certified HDMI cable, the screen may not display or a connection error may occur. (Recommended HDMI Cable Types)
  - High-Speed HDMI®/™ Cable (3 m or less)
  - High-Speed HDMI®/™ Cable with Ethernet (3 m or less)

CAUTION

- Do not use any unapproved items to ensure the safety and product life span.
- Any damage or injuries caused by using unapproved items are not covered by the manufacturer's warranty.
- Some models have a thin film attached on to the screen and this must not be removed.
- When attaching the stand to the TV set, place the screen facing down on a cushioned table or flat surface to protect the screen from scratches.
- Make sure that the screws are inserted correctly and fastened securely. (If they are not fastened securely enough, the TV may tilt forward after being installed.) Do not use too much force and over tighten the screws; otherwise screw may be damaged and not tighten correctly.

Separate purchase

Separate purchase items can be changed or modified for quality improvement without any notification. Contact your dealer to buy these items. These devices only work with certain models.
The model name or design may be changed depending on the upgrade of product functions, manufacturer's circumstances or policies.

(Depending on model)

AG-F*** Cinema 3D Glasses	**AN-MR600** Magic Remote
LG Audio Device	

Maintenance

Cleaning your TV

Clean your TV regularly to keep the best performance and to extend the product lifespan.

- Make sure to turn the power off and disconnect the power cord and all other cables first.
- When the TV is left unattended and unused for a long time, disconnect the power cord from the wall outlet to prevent possible damage from lightning or power surges.

Screen, frame, cabinet and stand

To remove dust or light dirt, wipe the surface with a dry, clean, and soft cloth.

To remove major dirt, wipe the surface with a soft cloth dampened in clean water or a diluted mild detergent. Then wipe immediately with a dry cloth.

- Avoid touching the screen at all times, as this may result in damage to the screen.
- Do not push, rub, or hit the screen surface with your fingernail or a sharp object, as this may result in scratches and image distortions.
- Do not use any chemicals as this may damage the product.
- Do not spray liquid onto the surface. If water enters the TV, it may result in fire, electric shock, or malfunction.

Power cord

Remove the accumulated dust or dirt on the power cord regularly.

Lifting and moving the TV

Please note the following advice to prevent the TV from being scratched or damaged and for safe transportation regardless of its type and size.

- It is recommended to move the TV in the box or packing material that the TV originally came in.
- Before moving or lifting the TV, disconnect the power cord and all cables.
- When holding the TV, the screen should face away from you to avoid damage.

- Hold the top and bottom of the TV frame firmly. Make sure not to hold the transparent part, speaker, or speaker grill area.

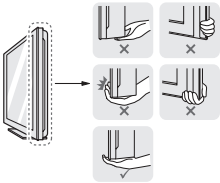

- When transporting a large TV, there should be at least 2 people.
- When transporting the TV by hand, hold the TV as shown in the following illustration.

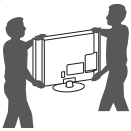

- When transporting the TV, do not expose the TV to jolts or excessive vibration.
- When transporting the TV, keep the TV upright, never turn the TV on its side or tilt towards the left or right.
- Do not apply excessive pressure to cause flexing /bending of frame chassis as it may damage screen.
- When handling the TV, be careful not to damage the protruding joystick button.

CAUTION

- Avoid touching the screen at all times, as this may result in damage to the screen.
- Do not move the TV by holding the cable holders, as the cable holders may break, and injuries and damage to the TV may occur.

Using the joystick button

(Image shown may differ from your TV.)

You can simply operate the TV functions, pressing or moving the joystick button up, down, left or right.

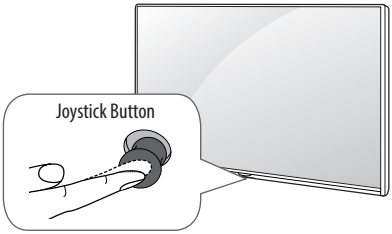

Basic functions

	Power On	When the TV is turned off, place your finger on the joystick button and press it once and release it.
	Power Off	When the TV is turned on, place your finger on the joystick button and press it once for a few seconds and release it. All running apps will close, and any recording in progress will stop.
	Volume Control	If you place your finger over the joystick button and move it left or right, you can adjust the volume level you want.
	Programmes Control	If you place your finger over the joystick button and move it up or down, you can scrolls through the saved programmes you want.

Adjusting the menu

When the TV is turned on, press the joystick button one time. You can adjust the Menu items moving the joystick button up, down, left or right.

⏻	Turns the power off.
✕	Clears on-screen displays and returns to TV viewing.
	Changes the input source.
⚙	Accesses the Quick Settings.

NOTE

- When your finger over the joystick button and push it to the up, down, left or right, be careful not to press the joystick button. If you press the joystick button first, you may not be able to adjust the volume level and saved programmes.

Mounting on a table

(Image shown may differ from your TV.)

1 Lift and tilt the TV into its upright position on a table.

- Leave a 10 cm (minimum) space from the wall for proper ventilation.

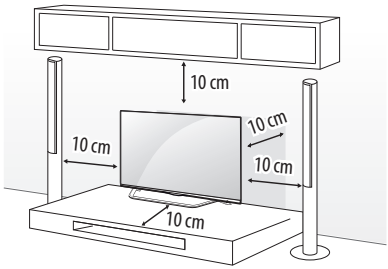

2 Connect the power cord to a wall outlet.

CAUTION

- Do not place the TV near or on sources of heat, as this may result in fire or other damage.

Using the kensington security system

(This feature is not available for all models.)

- Image shown may differ from your TV.

The Kensington security system connector is located at the rear of the TV. For more information of installation and using, refer to the manual provided with the Kensington security system or visit *http://www.kensington.com*. Connect the Kensington security system cable between the TV and a table.

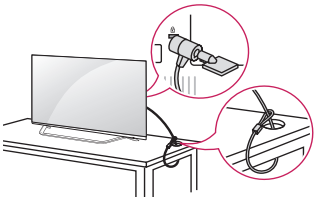

Securing the TV to a wall

(This feature is not available for all models.)

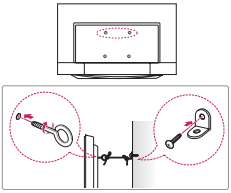

1 Insert and tighten the eye-bolts, or TV brackets and bolts on the back of the TV.
- If there are bolts inserted at the eye-bolts position, remove the bolts first.

2 Mount the wall brackets with the bolts to the wall.
Match the location of the wall bracket and the eye-bolts on the rear of the TV.

3 Connect the eye-bolts and wall brackets tightly with a sturdy rope.
Make sure to keep the rope horizontal with the flat surface.

CAUTION

- Make sure that children do not climb on or hang on the TV.

NOTE

- Use a platform or cabinet that is strong and large enough to support the TV securely.
- Brackets, bolts and ropes are not provided. You can obtain additional accessories from your local dealer.

Mounting on a wall

Attach an optional wall mount bracket at the rear of the TV carefully and install the wall mount bracket on a solid wall perpendicular to the floor. When you attach the TV to other building materials, please contact qualified personnel. LG recommends that wall mounting be performed by a qualified professional installer. We recommend the use of LG's wall mount bracket. LG's wall mount bracket is easy to move with cables connected. When you do not use LG's wall mount bracket, please use a wall mount bracket where the device is adequately secured to the wall with enough space to allow connectivity to external devices. It is advised to connect all the cables before installing fixed wall mounts.

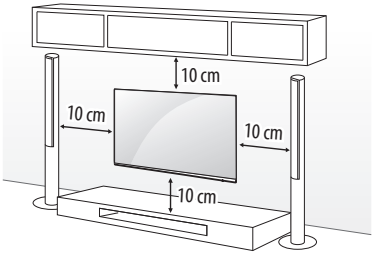

Make sure to use screws and wall mount bracket that meet the VESA standard. Standard dimensions for the wall mount kits are described in the following table.

Separate purchase (Wall mounting bracket)

Model	49/55UX96**	60UX96**
VESA (mm) (A x B)	300 x 300	300 x 300
Standard screw	M6	M6
Number of screws	4	4
Wall mount bracket	LSW350B MSW240	LSW350B
Model	79UX96**	
VESA (mm) (A x B)	600 x 400	
Standard screw	M8	
Number of screws	4	
Wall mount bracket	LSW640B	

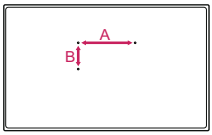

CAUTION

- Disconnect the power first, and then move or install the TV. Otherwise electric shock may occur.
- Remove the stand before installing the TV on a wall mount by performing the stand attachment in reverse.
- If you install the TV on a ceiling or slanted wall, it may fall and result in severe injury. Use an authorised LG wall mount and contact the local dealer or qualified personnel.
- Do not over tighten the screws as this may cause damage to the TV and void your warranty.
- Use the screws and wall mounts that meet the VESA standard. Any damages or injuries by misuse or using an improper accessory are not covered by the manufacturer's warranty.

NOTE

- Use the screws that are listed on the VESA standard screw specifications.
- The wall mount kit includes an installation manual and necessary parts.
- The wall mount bracket is not provided. You can obtain additional accessories from your local dealer.
- The length of screws may differ depending on the wall mount. Make sure to use the proper length.
- For more information, refer to the manual supplied with the wall mount.
- Depending on the shape of the stand, use a flat tool to remove the stand cover as illustrated below. (e.g., a flat screwdriver) (Only when the item of the following form is provided)

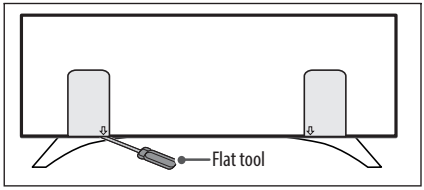

Connections (notifications)

Connect various external devices to the TV and switch input modes to select an external device. For more information of external device's connection, refer to the manual provided with each device.

Available external devices are: HD receivers, DVD players, VCRs, audio systems, USB storage devices, PC, gaming devices, and other external devices.

NOTE

- The external device connection may differ from the model.
- Connect external devices to the TV regardless of the order of the TV port.
- If you record a TV program on a DVD recorder or VCR, make sure to connect the TV signal input cable to the TV through a DVD recorder or VCR. For more information of recording, refer to the manual provided with the connected device.
- Refer to the external equipment's manual for operating instructions.
- If you connect a gaming device to the TV, use the cable supplied with the gaming device.
- In PC mode, there may be noise associated with the resolution, vertical pattern, contrast or brightness. If noise is present, change the PC output to another resolution, change the refresh rate to another rate or adjust the brightness and contrast on the PICTURE menu until the picture is clear.
- In PC mode, some resolution settings may not work properly depending on the graphics card.
- Only a USB storage device is recognizable.
- If ULTRA HD content is played on your PC, video or audio may become disrupted intermittently depending on your PC's performance. (Depending on model)

Antenna connection

Connect the TV to a wall antenna socket with an RF cable (75 Ω).

- Use a signal splitter to use more than 2 TVs.
- If the image quality is poor, install a signal amplifier properly to improve the image quality.
- If the image quality is poor with an antenna connected, try to realign the antenna in the correct direction.
- An antenna cable and converter are not supplied.
- Supported DTV Audio: MPEG, Dolby Digital, Dolby Digital Plus, HE-AAC
- For a location that is not supported with ULTRA HD broadcasting, this TV cannot receive ULTRA HD broadcasts directly. This TV cannot receive ULTRA HD (3840 x 2160 pixels) broadcasts directly because the related standards have not been confirmed. (Depending on model)

Satellite dish connection

(Only satellite models)

Connect the TV to a satellite dish to a satellite socket with a satellite RF cable (75 Ω).

CI module connection

(Depending on model)

View the encrypted (pay) services in digital TV mode.

- Check if the CI module is inserted into the PCMCIA card slot in the right direction. If the module is not inserted properly, this can cause damage to the TV and the PCMCIA card slot.
- If the TV does not display any video and audio when CI+ CAM is connected, please contact to the Terrestrial/Cable/Satellite Service Operator.

USB connection

(Depending on model)
Some USB Hubs may not work. If a USB device connected through a USB Hub is not detected, connect it directly to the USB port on the TV.

Speaker output setup

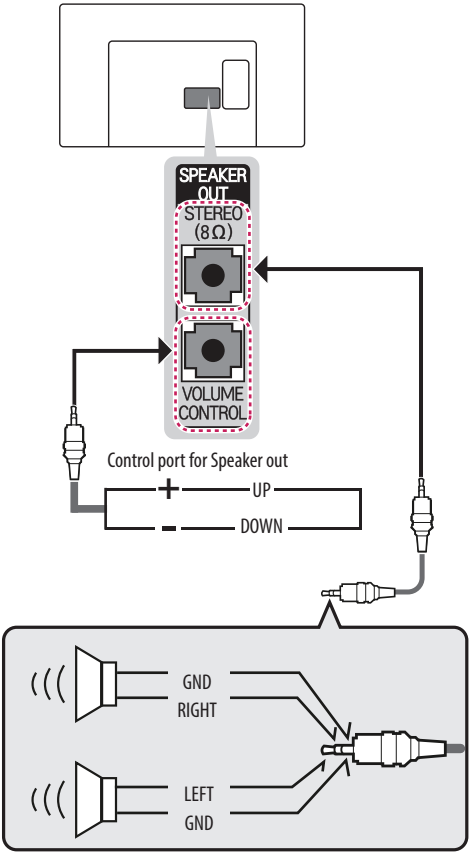

NOTE

- Do not connect your headphones or earphones to the port for connecting an external speaker.
- Use only with the 3 Pole 3.5mm Stereo Jack.

Method of volume control port

* Cable Spec.

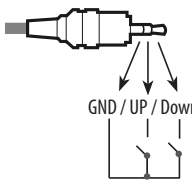	Each Up/ Down pin is pulled to 3.3V with CPU GPIO.
	CPU detects transition from 3.3V to GND level for volume control.

Network setup

Wired network connection

This TV can be connected to a Pro:Centric server via the **LAN** port. After making the physical connection, the TV needs to be set up for network communication.
Connect the **LAN** port of the Modem or Router from Pro:Centric server to the **LAN** port on the TV.

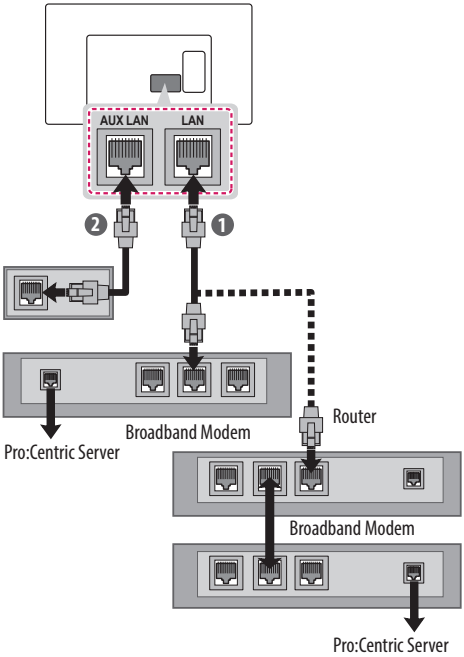

1. Connect the **LAN** port of the Modem or Router to the **LAN** port on the TV.
2. Connect the **LAN** port of the PC to the **AUX LAN** port on the TV.

CAUTION

- Do not connect a modular phone cable to the **LAN** port.
- Since there are various connection methods, please follow the specifications of your telecommunication carrier or internet service provider.

Other connections

Connect your TV to external devices. For the best picture and audio quality, connect the external device and the TV with the HDMI cable. Some separate cable is not provided.

- → → → **Picture** → **HDMI ULTRA HD Deep Colour**
  - **On** : Support 4K @ 50/60 Hz (4:4:4, 4:2:2, 4:2:0)
  - **Off** : Support 4K @ 50/60 Hz (4:2:0)

  If the device connected to Input Port also supports ULTRA HD Deep Colour, your picture may be clearer. However, if the device doesn't support it, it may not work properly. In that case, connect the device to a different HDMI port or change the TV's **HDMI ULTRA HD Deep Colour** setting to **Off**.
  (This feature is available on certain models which are supported ULTRA HD Deep Colour only.)

NOTE

- Supported HDMI Audio format :
  Dolby Digital (32 kHz, 44.1 kHz, 48 kHz),
  DTS (44.1 kHz, 48 kHz),
  PCM (32 kHz, 44.1 kHz, 48 kHz, 96 kHz, 192 kHz) (Depending on model)

Remote control

The descriptions in this manual are based on the buttons on the remote control. Please read this manual carefully and use the TV correctly.

To replace batteries, open the battery cover, replace batteries (1.5 V AAA) matching the ⊕ and ⊖ ends to the label inside the compartment, and close the battery cover. To remove the batteries, perform the installation actions in reverse.

CAUTION

- Do not mix old and new batteries, as this may damage the remote control.
- The remote control will not be included for all sales market.

Make sure to point the remote control toward the remote control sensor on the TV.

(Depending on model)

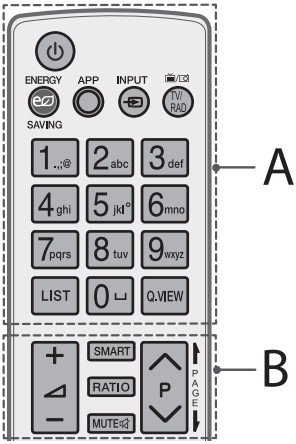

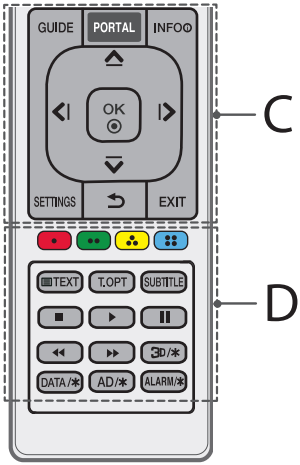

A

(POWER) Turns the TV on or off.
ENERGY SAVING Adjusts the brightness of the screen to reduce energy consumption.
APP Shows the previous history.
INPUT Changes the input source.
TV/RAD Selects Radio, TV and DTV programme.
Number buttons Enters numbers.
LIST Accesses the saved programme list.
(Space) Opens an empty space on the screen keyboard.
Q.VIEW Returns to the previously viewed programme.

B

+ / − Adjusts the volume level.
SMART Accesses the Home menu.
RATIO Resizes an image.
MUTE Mutes all sounds.
P Scrolls through the saved programmes.
PAGE Moves to the previous or next screen.

C

GUIDE Shows programme guide.
PORTAL Displays and removes hotel interactive menu.
INFO Views the information of the current programme and screen.
Navigation buttons (up/down/left/right) Scrolls through menus or options.
OK Selects menus or options and confirms your input.
SETTINGS Accesses the Quick Settings.
(BACK) Returns to the previous level.
EXIT Clears on-screen displays and returns to TV viewing.

D

Coloured buttons These access special functions in some menus. (: Red, : Green, : Yellow, : Blue)
Teletext buttons (TEXT / T.OPT) These buttons are used for teletext.
SUBTITLE Recalls your preferred subtitle in digital mode.
Control buttons (■, ▶, ❚❚, ◀◀, ▶▶) Controls the Premium contents, SmartShare menus or the SIMPLINK compatible devices (USB or SIMPLINK).
3D /✱ Used for viewing 3D video. (depending on model)
DATA /✱ Selects the MHP TV menu source. (depending on model)
AD /✱ By Pressing AD button, audio descriptions function will be enabled. (depending on model)
ALARM /✱ Sets the alarm function. (depending on model)

Licenses

Supported licenses may differ by model. For more information about licenses, visit *www.lg.com*.

Manufactured under license from Dolby Laboratories. Dolby and the double-D symbol are trademarks of Dolby Laboratories.

The terms HDMI and HDMI High-Definition Multimedia Interface, and the HDMI logo are trademarks or registered trademarks of HDMI Licensing LLC in the United States and other countries.

This DivX Certified® device has passed rigorous testing to ensure it plays DivX® video.

To play purchased DivX movies, first register your device at vod.divx.com. Find your registration code in the DivX VOD section of your device setup menu.

DivX Certified® to play DivX® video up to HD 1080p, including premium content.

DivX®, DivX Certified® and associated logos are trademarks of DivX, LLC and are used under license.

Covered by one or more of the following U.S. patents : 7,295,673; 7,460,668; 7,515,710; 7,519,274.

For DTS patents, see http://patents.dts.com. Manufactured under license from DTS Licensing Limited. DTS, DTS-HD, the Symbol, & DTS or DTS-HD and the Symbol together are registered trademarks of DTS, Inc. © DTS, Inc. All Rights Reserved.

Open source software notice information

To obtain the source code under GPL, LGPL, MPL, and other open source licenses, that is contained in this product, please visit *http:// opensource.lge.com*.

In addition to the source code, all referred license terms, warranty disclaimers and copyright notices are available for download.

LG Electronics will also provide open source code to you on CD-ROM for a charge covering the cost of performing such distribution (such as the cost of media, shipping, and handling) upon email request to opensource@lge.com. This offer is valid for three (3) years from the date on which you purchased the product.

Troubleshooting

The software version can be updated for improvement in performance. Customer needs to ensure the compatibility of customer's equipment with LGE software. If needed, please consult with LGE and upload revised software version according to the guidance provided by LGE.

Cannot control the TV with the remote control.

- Check the remote control sensor on the product and try again.
- Check if there is any obstacle between the product and the remote control.
- Check if the batteries are still working and properly installed (⊕ to ⊕, ⊖ to ⊖).

No image display and no sound is produced.

- Check if the product is turned on.
- Check if the power cord is connected to a wall outlet.
- Check if there is a problem in the wall outlet by connecting other products.

The TV turns off suddenly.

- Check the power control settings. The power supply may be interrupted.
- Check if the **Automatic Standby** (Depending on model) / **Sleep Timer** / **Timer Power Off** is activated in the **Timers** settings.
- If there is no signal while the TV is on, the TV will turn off automatically after 15 minutes of inactivity.

When connecting to the PC (HDMI), 'No signal' or 'Invalid Format' is displayed.

- Turn the TV off/on using the remote control.
- Reconnect the HDMI cable.
- Restart the PC with the TV on.

Specifications

Wireless module specification

- Because band channel used by the country could be different, the user can not change or adjust the operating frequency and this product is set for the regional frequency table.
- This device should be installed and operated with minimum distance 20 cm between the device and your body. And this phrase is for the general statement for consideration of user environment.

CE0197

Wireless module (LGSBW41) specification			
Wireless LAN		Bluetooth	
Standard	IEEE 802.11a/b/g/n	Standard	Bluetooth Version 4.0
Frequency Range	2400 to 2483.5 MHz 5150 to 5250 MHz 5725 to 5850 MHz (for Non EU)	Frequency Range	2400 to 2483.5 MHz
Output Power (Max.)	802.11a: 13 dBm 802.11b: 15 dBm 802.11g: 14 dBm 802.11n - 2.4 GHz: 16 dBm 802.11n - 5 GHz: 16 dBm	Output Power (Max.)	10 dBm or Lower

CI Module (W x H x D)		100.0 mm x 55.0 mm x 5.0 mm
Environment condition	**Operating Temperature**	0 ℃ to 40 ℃
	Operating Humidity	Less than 80 %
	Storage Temperature	-20 ℃ to 60 ℃
	Storage Humidity	Less than 85 %

	Digital TV (Depending on Country)	**Analogue TV (Depending on Country)**
Television system	DVB-T DVB-T/T2 DVB-T/T2/C/S/S2	PAL B/B, PAL B/G, PAL D/K, PAL-I SECAM B/G, SECAM D/K NTSC-M
Programme coverage	VHF, UHF C-Band, Ku-Band	VHF, UHF, CATV
Maximum number of storable programmes	DVB-S/S2 : 6,000 DVB-T/T2 & Analogue TV : 1,500	
External antenna impedance	75 Ω	

HDMI-DTV supported Mode

Resolution	Horizontal Frequency (kHz)	Vertical Frequency (Hz)
720 x 480	31.47 31.50	59.94 60.00
720 x 576	31.25	50.00
1280 x 720	44.96 45.00 37.50	59.94 60.00 50.00
1920 x 1080	28.12 33.72 33.75 26.97 27.00 33.71 33.75 56.25 67.43 67.50	50.00 59.94 60.00 23.97 24.00 29.97 30.00 50.00 59.94 60.00
3840 x 2160	53.95 54.00 56.25 61.43 67.50 1 112.50 135.00 135.00	23.98 24.00 25.00 29.97 30.00 50.00 59.94 60.00
4096 x 2160	53.95 54.00 56.25 61.43 67.50 1 112.50 135.00 135.00	23.98 24.00 25.00 29.97 30.00 50.00 59.94 60.00

1 : Only **HDMI IN 1**, **HDMI IN 2** port

HDMI-PC supported Mode

- PC audio is not supported

Resolution	Horizontal Frequency (kHz)	Vertical Frequency (Hz)
640 x 350	31.46	70.09
720 x 400	31.46	70.08
640 x 480	31.46	59.94
800 x 600	37.87	60.31
1024 x 768	48.36	60.00
1152 x 864	54.34	60.05
1280 x 1024	63.98	60.02
1360 x 768	47.71	60.01
1920 x 1080	67.50	60.00
3840 x 2160	67.50 56.25 54.00	30.00 25.00 24.00
4096 x 2160	53.95 54.00	23.97 24.00

Component Port Connecting Information

Component ports on the TV	Y	P_B	P_R

Video output ports on DVD player	Y	P_B	P_R
	Y	B-Y	R-Y
	Y	Cb	Cr
	Y	Pb	Pr

Signal	Component
480i/576i	O
480p/576p	O
720p/1080i	O
1080p	O (50 Hz / 60 Hz only)

3D supported mode (Only 3D models)

- Video, which is input as below media contents is switched into the 3D screen automatically. The method for 3D digital broadcast may differ depending on the signal environment. If video is not switched automatically into 3D, manually convert the settings to view 3D images. For models supporting Miracast / Intel® WiDi, you can set the 3D mode.

3D supported mode automatically				
Input	**Signal**	**Horizontal Frequency (kHz)**	**Vertical Frequency (Hz)**	**Playable 3D video format**
RF	1280 x 720	37.50	50.00	2D to 3D, Side by Side, Top & Bottom
	1920 x 1080	28.13	50.00	
HDMI	640 x 480	31.46 / 31.50	59.94/ 60.00	Top & Bottom, Side by Side (Half), Side by Side (Full)
		62.93 / 63.00		Frame Packing, Line Alternative
	720 x 480	31.46 / 31.50	59.94 / 60.00	Top & Bottom, Side by Side (Half), Side by Side (Full)
		62.93 /63.00		Frame Packing, Line Alternative
	720 x 576	15.62	50.00	Top & Bottom, Side by Side (Half), Side by Side (Full), Frame Packing
		31.25		Top & Bottom, Side by Side (Half), Side by Side (Full)
		62.50		Frame Packing, Line Alternative
	1280 x 720	37.50	50.00	Top & Bottom, Side by Side (Half), Side by Side (Full)
		44.96 / 45.00	59.94 / 60.00	
		75.00	50.00	Frame Packing, Line Alternative
		89.91/90.00	59.94 / 60.00	
	1920 x 1080	28.12	50.00	Top & Bottom, Side by Side (Half), Side by Side (Full)
		33.72 / 33.75	59.94 / 60.00	
		56.25	50.00	Frame Packing
		67.43/67.50	59.94 / 60.00	
		26.97 / 27.00	23.97 / 24.00	Top & Bottom, Side by Side (Half), Side by Side (Full)
		28.12	25.00	
		33.71 / 33.75	29.97 / 30.00	
		43.94 / 54.00	23.97 / 24.00	Frame Packing, Line Alternative
		56.25	25.00	
		67.43 / 67.50	29.97 / 30.00	
		56.25	50.00	Top & Bottom, Side by Side (Half)
		67.43 / 67.50	59.94 / 60.00	
USB	1080p	33.75	30.00	Side by Side (Half), Top & Bottom, Checker Board, MPO (Photo), JPS (Photo)
	2160p	67.50	30.00	
	Signal			**Playable 3D video format**
DTV	Frame Compatible			Side by Side (Half), Top & Bottom

3D supported mode manually				
Input	Signal			Playable 3D video format
	Resolution	Horizontal Frequency (kHz)	Vertical Frequency (Hz)	
DTV / ATV (SCART)	HD / SD	-	-	2D to 3D, Side by Side (Half), Top & Bottom
	SD	-	-	
HDMI-PC	1024 x 768	48.36	60.00	2D to 3D, Side by Side (Half), Top & Bottom
	1360 x 768	47.71		
	1920 x 1080	67.50		2D to 3D, Side by Side (Half), Top & Bottom, Checker Board, Row Interleaving, Column Interleaving
	3840 x 2160	54.00	24.00	2D to 3D, Side by Side (Half), Top & Bottom (half)
		56.25	25.00	
		67.50	30.00	
	4096 x 2160	54.00	24.00	
	Others	-	-	2D to 3D, Side by Side (Half), Top & Bottom
HDMI-DTV	720 x 480	31.50	60.00	2D to 3D, Side by Side (Half), Top & Bottom, Checker Board, Row Interleaving, Column Interleaving
	720 x 576	31.25	50.00	
	1280 x 720	45.00	60.00	
		37.50	50.00	
	1920 x 1080i	33.75	60.00	2D to 3D, Side by Side (Half), Top & Bottom
		28.12	50.00	
	1920 x 1080p	27.00	24.00	2D to 3D, Side by Side (Half), Top & Bottom, Checker Board, Row Interleaving, Column Interleaving
		28.12	25.00	
		33.75	30.00	
		67.50	60.00	
		56.25	50.00	
	3840 x 2160 4096 x 2160	53.95	23.97	2D to 3D, Side by Side (Half), Top & Bottom (Half)
		54.00	24.00	
		56.25	25.00	
		61.43	29.97	
		67.50	30.00	
		112.50	50.00	2D to 3D, Side by Side (Half), Top & Bottom
		135.00	60.00	

1 : Only **HDMI IN 1**, **HDMI IN 2** port

3D supported mode manually				
Input	Signal			Playable 3D video format
	Resolution	Horizontal Frequency (kHz)	Vertical Frequency (Hz)	
Component	1280 x 720	37.50	50.00	2D to 3D, Side by Side (Half), Top & Bottom
		45.00	60.00	
		44.96	59.94	
	1920 x 1280	33.75	60.00	
		33.72	59.94	
		28.12	50.00	
		67.50	60.00	
		67.43	59.94	
		27.00	24.00	
		28.12	25.00	
		56.25	50.00	
		26.97	23.97	
		33.75	30.00	
		33.71	29.97	
USB (Movie)	Under 704 x 480	-	-	2D to 3D
	Over 704 x 480 under 1080p interlaced	-	-	2D to 3D, Side by Side (Half), Top & Bottom
	Over 704 x 480 under 1080p progressive	-	50.00 / 60.00	2D to 3D, Side by Side (Half), Top & Bottom, Checker Board, Row Interleaving, Column Interleaving
		-	Others	
	Over 2160p	-	24/25/30/50/60	2D to 3D, Side by Side (Half), Top & Bottom
USB (Photo)	Under 320 x 240	-	-	2D to 3D
	Over 320 x 240	-	-	2D to 3D, Side by Side (Half), Top & Bottom
Miracast/ Intel® WiDi	-	-	-	2D to 3D

Photo format

File Format	Format	Resolution
.jpeg, .jpg, .jpe	JPEG	Minimum: 64 x 64 Maximum: 15,360 (W) x 8,640 (H) / Progressive Type: 1,920 (W) x 1,440 (H)
.png	PNG	Minimum: 64 x 64 Maximum: 5,760 (W) x 5,760 (H)
.bmp	BMP	Minimum: 64 x 64 Maximum: 1,920 (W) x 1,080 (H)
1 .jps	JPS	Minimum: 64 x 64 Maximum: 15,360 (W) x 8,640 (H)
.mpo	MPO	

1 : Only 3D mode

Audio format

File Format	Item	Info
.mp3	Bit rate	32 Kbps - 320 Kbps
	Sample freq.	16 kHz - 48 kHz
	Support	MPEG1, MPEG2
	Channels	mono, stereo
.wav	Bit rate	-
	Sample freq.	~384 kHz
	Support	PCM
	Channels	mono, stereo
.ogg	Bit rate	64 Kbps - 500 Kbps
	Sample freq.	8 kHz - 48 kHz
	Support	Vorbis
	Channels	mono, stereo
.wma	Bit rate	~1.5 Mbps
	Sample freq.	8 kHz - 192 kHz
	Support	WMA
	Channels	up to 6 ch

- The number of supported programmes may vary depending on the sample frequency.

Video codec

Extenstion	Codec	
.asf .wmv	Video	VC-1 Advanced Profile (WMVA excluded), VC-1 Simple and Main Profiles
	Audio	WMA Standard (WMA v1/WMA Speech excluded), WMA 9 Professional
.divx .avi	Video	DivX3.11, DivX4, DivX5, DivX6, XViD(except 3 warp-point GMC), H.264/AVC, Motion Jpeg, MPEG-4
	Audio	MPEG-1 Layer I, II, MPEG-1 Layer III (MP3), Dolby Digital, LPCM, ADPCM, DTS
.mp4 .m4v .mov	Video	H.264/AVC, MPEG-4, HEVC
	Audio	AAC, MPEG-1 Layer III (MP3)
.3gp .3g2	Video	H.264/AVC, MPEG-4
	Audio	AAC, AMR-NB, AMR-WB
.mkv	Video	MPEG-2, MPEG-4, H.264/AVC, VP8, VP9, HEVC
	Audio	Dolby Digital, PCM, DTS, MPEG-1 Layer I, II, MPEG-1 Layer III (MP3), AAC
.ts .trp .tp .mts	Video	H.264/AVC, MPEG-2, HEVC
	Audio	MPEG-1 Layer I, II, MPEG-1 Layer III (MP3), Dolby Digital, Dolby Digital Plus, AAC, PCM
.mpg .mpeg .dat	Video	MPEG-1, MPEG-2
	Audio	MPEG-1 Layer I, II, MPEG-1 Layer III (MP3)
.vob	Video	MPEG-1, MPEG-2
	Audio	Dolby Digital, MPEG-1 Layer I, II, DVD-LPCM
.rm .rmvb	Video	RV30, RV40
	Audio	Realaudio6(cook), AAC LC, HE-AAC
	• This feature is available in certain countries only.	

Record the model number and serial number of the TV.
Refer to the label on the back cover and quote this information to your dealer when requiring any service.

MODEL _____

SERIAL _____

Only Russia
только для РОССИИ

Символ «не для пищевой продукции» применяется в соответствие с техническим регламентом Таможенного союза «О безопасности упаковки» 005/2011 и указывает на то, что упаковка данного продукта не предназначена для повторного использования и подлежит утилизации. Упаковку данного продукта запрещается использовать для хранения пищевой продукции.

Символ «петля Мебиуса» указывает на возможность утилизации упаковки. Символ может быть дополнен обозначением материала упаковки в виде цифрового и/или буквенного обозначения.

Only Ukraine

Продукти без радіочастотних модулів.

001

Продукти з радіочастотними модулями.

032

Адреса імпортера : ПІІ «ЛГ ЕЛЕКТРОНІКС Україна» вул. Басейна, 6, м. Київ, 01004, тел.: +38 (044) 201-43-50

Ukraine Restriction of Hazardous Substances

The equipment complies with requirements of the Technical Regulation, in terms of restrictions for the use of certain dangerous substances in electrical and electronic equipment.

Обмеження України на наявність небезпечних речовин

Устаткування відповідає вимогам технічного регламенту щодо обмеженного використання небезпечних речовин в електричному і електронному обладнанні.

Only Kazakhstan

Символ Кедендік одақтың 005/2011 техникалық регламентіне сәйкес қолданылады және осы өнімнің қаптамасын екінші рет пайдалануға арналмағанын және жоюға жататынын көрсетеді. Осы өнімнің қаптамасын азық-түлік өнімдерін сақтау үшін пайдалануға тыйым салынады.

Символ қаптаманы жою мүмкіндігін көрсетеді. Символ сандық код және/немесе әріп белгілері түріндегі қаптама материалының белгісімен толықтырылуы мүмкін.

Only Jordan

WEEE

Disposal of your appliance

The symbol indicating separate collection for electrical and electronic equipment consists of the crossed-out wheeled bin.

الأردن فقط

WEEE

التخلص من الجهاز الخاص بك.

الرمز الذي يشير إلى مجموعة منفصلة من المعدات الإلكترونية والكهربائية هو عبارة عن صندوق قمامة بعجلات ومشطوب.

Federal Communications Commission (FCC) Statement

TV

You are cautioned that changes or modifications not expressly approved by the part responsible for compliance could void the user's authority to operate the equipment. This equipment has been tested and found to comply with the limits for a Class B digital device, pursuant to part 15 of the FCC rules. These limits are designed to provide reasonable protection against harmful interference in a residential installation. This equipment generates, uses and can radiate radio frequency energy and, if not installed and used in accordance with the instructions, may cause harmful interference to radio communications. However, there is no guarantee that interference will not occur in a particular installation. If this equipment does cause harmful interference to radio or television reception, which can be determined by turning the equipment off and on, the user is encouraged to try to correct the interference by one or more of the following measures :

- Reorient or relocate the receiving antenna.
- Increase the separation between the equipment and receiver.
- Connect the equipment into an outlet on a circuit different from that to which the receiver is connected.
- Consult the dealer or an experienced radio/TV technician for help.

This device complies with Part 15 of the FCC Rules. Operation is subject to the following two conditions :

1) this device may not cause harmful interference, and
2) this device must accept any interference received, including interference that may cause undesired operation of the device of the device.

Indoor use only

FCC Caution: Any changes or modifications not expressly approved by the party responsible for compliance could void the user's authority to operate this equipment and for indoor use only, use outdoors or in other modes not covered by this manual may violate the FCC regulation and violate the user authority to use the product.

Wireless TV

(Except for Wi-Fi built-in model)

You are cautioned that changes or modifications not expressly approved by the part responsible for compliance could void the user's authority to operate the equipment. This equipment has been tested and found to comply with the limits for a Class B digital device, pursuant to part 15 of the FCC rules. These limits are designed to provide reasonable protection against harmful interference in a residential installation. This equipment generates, uses and can radiate radio frequency energy and, if not installed and used in accordance with the instructions, may cause harmful interference to radio communications. However, there is no guarantee that interference will not occur in a particular installation. If this equipment does cause harmful interference to radio or television reception, which can be determined by turning the equipment off and on, the user is encouraged to try to correct the interference by one or more of the following measures :

- Reorient or relocate the receiving antenna.
- Increase the separation between the equipment and receiver.
- Connect the equipment into an outlet on a circuit different from that to which the receiver is connected.
- Consult the dealer or an experienced radio/TV technician for help.

This device complies with Part 15 of the FCC Rules. Operation is subject to the following two conditions :

1) this device may not cause harmful interference, and
2) this device must accept any interference received, including interference that may cause undesired operation of the device of the device.

Indoor use only

FCC Caution: Any changes or modifications not expressly approved by the party responsible for compliance could void the user's authority to operate this equipment and for indoor use only, use outdoors or in other modes not covered by this manual may violate the FCC regulation and violate the user authority to use the product.

FCC RF Radiation Exposure Statement :

This equipment complies with FCC radiation exposure limits set forth for an uncontrolled environment. This transmitter must not be co-located or operating in conjunction with any other antenna or transmitter.

Wireless TV

(Only Wi-Fi built-in model)

You are cautioned that changes or modifications not expressly approved by the part responsible for compliance could void the user's authority to operate the equipment.
This equipment has been tested and found to comply with the limits for a Class B digital device, pursuant to part 15 of the FCC rules. These limits are designed to provide reasonable protection against harmful interference in a residential installation. This equipment generates, uses and can radiate radio frequency energy and, if not installed and used in accordance with the instructions, may cause harmful interference to radio communications. However, there is no guarantee that interference will not occur in a particular installation.
If this equipment does cause harmful interference to radio or television reception, which can be determined by turning the equipment off and on, the user is encouraged to try to correct the interference by one or more of the following measures :

- Reorient or relocate the receiving antenna.
- Increase the separation between the equipment and receiver.
- Connect the equipment into an outlet on a circuit different from that to which the receiver is connected.
- Consult the dealer or an experienced radio/TV technician for help.

This device complies with Part 15 of the FCC Rules. Operation is subject to the following two conditions :
1) this device may not cause harmful interference, and
2) this device must accept any interference received, including interference that may cause undesired operation of the device of the device.

Indoor use only
FCC Caution: Any changes or modifications not expressly approved by the party responsible for compliance could void the user's authority to operate this equipment and for indoor use only, use outdoors or in other modes not covered by this manual may violate the FCC regulation and violate the user authority to use the product.
Specially, within the 5.15-5.25 GHz band, U-NII device is restricted to indoor operations to reduce any potential for harmful interference to co-channel MSS operations.

FCC RF Radiation Exposure Statement:
This equipment complies with FCC radiation exposure limits set forth for an uncontrolled environment. This transmitter must not be co-located or operating in conjunction with any other antenna or transmitter.

CU Conformity Notice

EAC

The working life of this set is 5 years since the date of delivery to consumer.
Срок службы данного товара - 5 лет со дня передачи товара потребителю.

Conformity Notice

TV

LG Electronics hereby declares that this product is in compliance with the following Directives.

EMC Directive 2004/108/EC
LOW VOLTAGE Directive 2006/95/EC
ErP Directive 2009/125/EC
RoHS Directive 2011/65/EU

European representative:
LG Electronics Inc. Krijgsman 1, 1186 DM Amstelveen, The Netherlands

Wireless TV

(Except for Wi-Fi built-in model)

English

LG Electronics hereby declares that this product is in compliance with the following Directives.

R&TTE Directive 1999/5/EC
EMC Directive 2004/108/EC
LOW VOLTAGE Directive 2006/95/EC
ErP Directive 2009/125/EC
RoHS Directive 2011/65/EU

The products described above comply with the essential requirements of the directives specified.
This device is a 2.4 GHz wideband transmission system, intended for use in all EU member states and EFTA countries, except in France.

This device may not be used for setting up outdoor radio links in France and in some areas the RF output power may be limited to 10 mW EIRP in the frequency range of 2454 – 2483.5 MHz. For detailed information the end user should contact the national spectrum authority in France.

European representative:
LG Electronics Inc. Krijgsman 1, 1186 DM Amstelveen, The Netherlands

The product is designed for indoor use only.

CE Notified Body statement:
This is a Class B product. In a domestic environment, this product may cause radio interference, in which case the user may be required to take adequate measures.

Deutsch

EU-Konformitätserklärung:
LG Electronics erklärt hiermit, dass dieses Produkt den folgenden Richtlinien entspricht:

R&TTE-Richtlinie 1999/5/EC
EMC-Richtlinie 2004/108/EC
Niederspannungsrichtlinie 2006/95/EC
ErP-Richtlinie 2009/125/EG
RoHS-Richtlinie 2011/65/EU

Die oben beschriebenen Produkte entsprechen den grundlegenden Anforderungen der angegebenen Richtlinien.

Vertreter für Europa:
LG Electronics Inc. Krijgsman 1, 1186 DM Amstelveen, Niederlande

Français

Notice de conformité UE:
LG Electronics atteste que ces produits est en conformité avec les Directives suivantes.

Directive 1999/5/CE des R&TTE
Directive 2004/108/CE EMC
Directive 2006/95/CE des appareils basse tension
Directive ErP 2009/125/EC
Directive RoHS 2011/65/EU

Les produits décrits ci-dessus sont en conformité avec les exigences essentiels des directives spécifiées.

Représentant en Europe :
LG Electronics Inc. Krijgsman 1, 1186 DM Amstelveen, Pays-Bas

Italiano

Avviso di conformità EU:
LG dichiara che questo prodotto è conforme alle seguenti direttive.

Direttiva R&TTE 1999/5/CE
Direttiva EMC 2004/108/CE
Direttiva BASSA TENSIONE 2006/95/CE
Direttiva ErP 2009/125/CE
Direttiva RoHS 2011/65/UE

I prodotti descritti sopra sono conformi ai requisiti essenziali delle direttive specificate.

Rappresentante europeo:
LG Electronics Inc. Krijgsman 1, 1186 DM Amstelveen, Paesi Bassi

Español

Aviso de conformidad con la UE:
Por la presente, LG Electronics declara que este producto cumple con las siguientes directivas.

Directiva sobre equipos radioeléctricos y equipos terminales de telecomunicación 1999/5/CE
Directiva sobre compatibilidad electromagnética 2004/108/CE
Directiva sobre baja tensión 2006/95/CE
Directiva ErP 2009/125/EC
Directiva RoHS 2011/65/EU

Los productos descritos anteriormente cumplen con los requisitos esenciales de las directivas especificadas.

Representante europeo:
LG Electronics Inc. Krijgsman 1, 1186 DM Amstelveen, Países Bajos

Português

Aviso de conformidade da UE:
A LG Electronics declara por este meio que este produto está em conformidade com as seguintes Directivas.

Directiva R&TTE 1999/5/CE
Directiva relativa à compatibilidade electromagnética 2004/108/CE
Directiva para equipamentos de BAIXA TENSÃO 2006/95/CE
Directiva relativa a ErP (Produtos relacionados com energia) 2009/125/EC
Directiva relativa à RoHS (Restrição de Certas Substâncias Perigosas) 2011/65/EU

Os produtos acima descritos estão em conformidade com os requisitos essenciais das directivas especificadas.

Representante europeu:
LG Electronics Inc. Krijgsman 1, 1186 DM Amstelveen, Holanda

Nederlands

Conformiteitsverklaring (EU):
LG verklaart hierbij dat dit product voldoet aan de volgende richtlijnen.

R&TTE-richtlijn 1999/5/EC
EMC-richtlijn 2004/108/EC
Laagspanningsrichtlijn 2006/95/EC
Europese Richtlijn 2009/125/EG
Europese Richtlijn 2011/65/EU

De hierboven genoemde producten voldoen aan de essentiële voorwaarden van de gespecificeerde richtlijnen.

Europees hoofdkantoor:
LG Electronics Inc. Krijgsman 1, 1186 DM Amstelveen, Nederland

Ελληνικά

Δήλωση συμμόρφωσης Ε.Ε.:
Η LG Electronics δηλώνει ότι το παρόν προϊόν συμμορφώνεται με τις εξής Οδηγίες:

Οδηγία 1999/5/ΕΚ περί Ραδιοεξοπλισμού και Τηλεπικοινωνιακού Τερματικού Εξοπλισμού (R&TTE)
Οδηγία 2004/108/ΕΚ περί Ηλεκτρομαγνητικής Συμβατότητας
Οδηγία 2006/95/ΕΚ περί Χαμηλής Τάσης
Οδηγία ErP 2009/125/ΕΚ
Οδηγία RoHS 2011/65/ΕΕ

Τα παραπάνω προϊόντα συμμορφώνονται με τις ουσιώδεις απαιτήσεις των ανωτέρω οδηγιών.

Ευρωπαϊκός αντιπρόσωπος:
LG Electronics Krijgsman 1, 1186 DM Amstelveen, Ολλανδία

Magyar

EU megfelelőségi nyilatkozat:
Az LG Electronics ezúton kijelenti, hogy a termék megfelel a következő irányelvek előírásainak:

1999/5/EK R&TTE irányelv
2004/108/EK EMC irányelv
2006/95/EK KISFESZÜLTSÉGŰ irányelv
2009/125/EK ErP irányelv
2011/65/EU RoHS irányelv

A fentiekben bemutatott termékek teljesítik a megadott irányelvek alapvető előírásait.

Európai képviselet:
LG Electronics Krijgsman 1, 1186 DM Amstelveen, Hollandia

Polski

Deklaracja zgodności z normami UE:
Firma LG Electronics niniejszym zaświadcza, że ten produkt spełnia wymagania poniższych dyrektyw.

Dyrektywa 1999/5/WE w sprawie urządzeń radiowych i końcowych urządzeń telekomunikacyjnych
Dyrektywa 2004/108/WE dotycząca kompatybilności elektromagnetycznej
Dyrektywa 2006/95/WE dotycząca sprzętu elektrycznego przeznaczonego do stosowania w określonych granicach napięcia
Dyrektywa 2009/125/WE w sprawie wymogów dotyczących ekoprojektu dla produktów związanych z energią
Dyrektywa RoHS 2011/65/UE w sprawie ograniczenia stosowania substancji niebezpiecznych

Powyżej wymienione produkty spełniają zasadnicze wymagania wymienionych dyrektyw.

Przedstawiciel na Europę:
LG Electronics Krijgsman 1, 1186 DM Amstelveen, Holandia

Česky

Prohlášení o shodě s legislativou EU:
Společnost LG Electronics tímto prohlašuje, že tento výrobek je ve shodě s následujícími směrnicemi.

Směrnice o radiokomunikačních a telekomunikačních koncových zařízeních 1999/5/EC
Směrnice o elektromagnetické kompatibilitě 2004/108/EC
Směrnice o nízkém napětí 2006/95/EC
Směrnice ErP 2009/125/EC
Směrnice RoHS 2011/65/EU

Výše popisované produkty jsou v souladu se základními požadavky uvedených směrnic.

Zastoupení v Evropě:
LG Electronics Krijgsman 1, 1186 DM Amstelveen, Nizozemsko

Slovenčina

Vyhlásenie o zhode pre oblasť EÚ:
Spoločnosť LG Electronics týmto vyhlasuje, že tento výrobok dosahuje súlad s nasledujúcimi smernicami.

Smernica R&TTE 1999/5/ES
Smernica EMC 2004/108/ES
Smernica o slaboprúde 2006/95/ES
Smernica ErP 2009/125/ES
Smernica RoHS 2011/65/EÚ

Vyššie popísané výrobky vyhovujú základným požiadavkám uvedených smerníc.

Európske zastupiteľstvo:
LG Electronics Krijgsman 1, 1186 DM Amstelveen, Holandsko

Română

Declaraţie de conformitate UE:
Prin prezenta, LG Electronics declară că acest produs este conform cu următoarele Directive.

Directiva R&TTE 1999/5/CE
Directiva EMC 2004/108/CE
Directiva pentru tensiune joasă 2006/95/CE
Directiva ErP 2009/125/CE

Directiva RoHS 2011/65/UE

Produsul descris mai sus este conform cu cerinţele esenţiale ale directivelor specificate.

Reprezentant european:
LG Electronics Krijgsman 1, 1186 DM Amstelveen, Olanda

Български

Бележка относно съответствие с нормите на ЕС:
С настоящото LG Electronics декларира, че този продукт съответства на следните директиви.

R&TTE директива 1999/5/EC
EMC директива 2004/108/EC
Директива за НИСКО НАПРЕЖЕНИЕ 2006/95/EC
ErP Директива 2009/125/EC
RoHS Директива 2011/65/EU

Описаният по-горе продукт съответства на основните изисквания на посочените директиви.

Европейски представител:
LG Electronics Krijgsman 1, 1186 DM Amstelveen, Нидерландия

Svenska

Meddelande om EU-regelefterlevnad:
LG Electronics intygar härmed att den här produkten uppfyller följande gällande direktiv:

R&TTE-direktivet 1999/5/EG
EMC-direktivet 2004/108/EG
Lågspänningsdirektivet 2006/95/EG
ErP-direktivet 2009/125/EG
RoHS-direktivet 2011/65/EG

Ovan nämnda produkter stämmer överens med de grundläggande kraven som anges i direktiven.

Europeisk representant:
LG Electronics Krijgsman 1, 1186 DM Amstelveen, Nederländerna

Norsk

Samsvarsmerknad for EU:
LG Electronics erklærer herved at dette produktet er i henhold til de følgende direktivene.

R&TTE-direktiv 1999/5/EC
EMC-direktiv 2004/108/EC
Lavspenningsdirektiv 2006/95/EC
ErP-direktiv 2009/125/EC
RoHS-direktiv 2011/65/EU

Produktene som beskrives ovenfor, overholder kravene i de angitte direktivene.

Europeisk representant:
LG Electronics Krijgsman 1, 1186 DM Amstelveen, Nederland

Dansk

EU-overensstemmelseserklæring:
LG Electronics erklærer hermed, at dette produkt overholder følgende direktiver.

R&TTE-direktiv 1999/5/EC
EMC-direktiv 2004/108/EC
LOW VOLTAGE-direktiv 2006/95/EC
ErP-direktiv 2009/125/EC
RoHS-direktiv 2011/65/EU

De produkter, der er beskrevet ovenfor, overholder de vigtigste krav i de angivne direktiver.

Europæisk repræsentant:
LG Electronics Krijgsman 1, 1186 DM Amstelveen, Holland

Suomi

EU-vaatimustenmukaisuusilmoitus:
LG Electronics vakuuttaa täten, että tämä tuote on seuraavien direktiivien mukainen.

R&TTE-direktiivi 1999/5/EC
EMC-direktiivi 2004/108/EC
LOW VOLTAGE -direktiivi 2006/95/EC
ErP-direktiivi 2009/125/EY
RoHS-direktiivi 2011/65/EU

Edellä mainitut tuotteet ovat eriteltyjen direktiivien oleellisten vaatimusten mukaisia.

Edustaja Euroopassa:
LG Electronics Krijgsman 1, 1186 DM Amstelveen, Alankomaat

Eesti

EÜ vastavuskinnitus:
Käesolevaga kinnitab LG Electronics, et see toode ühildub järg¬miste direktiividega..

Raadioseadmete ja telekommunikatsioonivõrgu lõppseadmete direktiiv 1999/5/EÜ
Elektromagnetilise ühilduvuse direktiiv 2004/108/EÜ
MADALPINGESEADMETE direktiiv 2006/95/EÜ
Energiamõjuga toodete direktiiv 2009/125/EÜ
RoHS-direktiiv 2011/65/EL

Eelnimetatud tooted vastavad märgitud direktiivide oluliste nõuetele.

Euroopa esindus:
LG Electronics Krijgsman 1, 1186 DM Amstelveen, Holland

Lietuvių k.

EB atitikties deklaracija:
„LG Electronics“ pareiškia, kad šis produktas atitinka tokias direktyvas.

R&TTE direktyvą 1999/5/EB
EMS direktyvą 2004/108/EB
Žemos įtampos direktyvą 2006/95/EB
ErP direktyva 2009/125/EB
RoHS direktyva 2011/65/ES

Aukščiau įvardinti produktai atitinka nurodytų direktyvų esminius reikalavimus.

Atstovas Europoje:
LG Electronics Krijgsman 1, 1186 DM Amstelveen, Nyderlandai

Latviešu

Paziņojums par atbilstību ES direktīvām:
LG Electronics ar šo paziņo, ka šis izstrādājums atbilst turpmāk minētajām direktīvām.

R&TTE direktīva 1999/5/EK
Elektromagnētiskās savietojamības direktīva 2004/108/EK
Direktīva par zemspriegumu 2006/95/EK
Elektromagnētiskās savietojamības direktīva 2009/125/EK
RoHS direktīva 2011/65/ES

Iepriekš aprakstītie izstrādājumi atbilst norādīto direktīvu būtiskajām prasībām.

Pārstāvniecība Eiropā:
LG Electronics Krijgsman 1, 1186 DM Amstelveen, Nīderlande

Slovenščina

Izjava o skladnosti EU:
LG Electronics izjavlja, da je ta izdelek v skladu z naslednjimi direktivami.

Direktiva 1999/5/ES o radijski opremi in telekomunikacijski terminalski opremi ter medsebojnem priznavanju skladnosti te opreme
Direktiva 2004/108/ES o elektromagnetni združljivosti
Direktiva 2006/95/ES o nizki napetosti
Direktiva 2009/125/ES o energijskih izdelkih
Direktiva 2011/65/EU o standardu RoHS

Zgoraj opisani izdelki izpolnjujejo bistvene zahteve navedenih direktiv.

Evropski zastopnik:
LG Electronics Krijgsman 1, 1186 DM Amstelveen, Nizozemska

Srpski

Napomena o usklađenosti sa standardima:
LG Electronics ovim izjavljuje da je ovaj proizvod usklađen sa sledećim direktivama:.

R&TTE direktiva 1999/5/EC
EMC direktiva 2004/108/EC
NISKONAPONSKA direktiva 2006/95/EC
ErP direktiva 2009/125/EC
RoHS direktiva 2011/65/EU

Prethodno opisani proizvodi usklađeni su s osnovnim zahtevima iz navedenih direktiva.

Evropski predstavnik:
LG Electronics Krijgsman 1, 1186 DM Amstelveen, Holandija

Hrvatski

Napomena o sukladnosti s EU standardima:
LG Electronics ovim putem izjavljuje da je ovaj proizvod sukladan sljedećim Direktivama.

R&TTE direktiva 1999/5/EC
R&EMC direktiva 2004/108/EC
Direktiva o niskonaponskim uređajima 2006/95/EC
ErP direktiva 2009/125/EC
RoHS direktiva 2011/65/EU

Gore opisan proizvod sukladan je osnovnim zahtjevima navedenih direktiva.

Zastupnik za Europu:
LG Electronics Krijgsman 1, 1186 DM Amstelveen, Nizozemska

Türkçe

AB Uygunluk Bildirimi:
LG Electronics, burada bu ürünün aşağıdaki Direktifler ile uyumlu olduğunu beyan eder.

R&TTE Direktifi 1999/5/EC
EMC Direktifi 2004/108/EC
DÜŞÜK VOLTAJ Direktifi 2006/95/EC
ErP Direktifi 2009/125/EC
RoHS Direktifi 2011/65/EU

Yukarıda anlatılan ürünler, belirtilen direktiflerin gerekliliklerı ile uyumludur.

Avrupa temsilciliği :
LG Electronics Krijgsman 1, 1186 DM Amstelveen, Hollanda

Shqip

Deklarata e Konformitetit për BE-në:
LG Electronics nëpërmjet kësaj deklaron se ky produkt është në përputhje me Direktivat e mëposhtme.

Direktivën R&TTE 1999/5/KE
Direktivën EMC 2004/108/KE
Direktivën për VOLTAZHIN E ULËT 2006/95/KE
Direktiva ErP 2009/125/KE
Direktiva RoHS 2011/65/BE

Produktet e përshkruara më lart përputhen me kërkesat thelbësore të direktivave të specifikuara.

Përfaqësuesi evropian:
LG Electronics Krijgsman 1, 1186 DM Amstelveen, Holandë

Bosanski

Napomena o usklađenosti sa propisima EU:
LG Electronics ovim putem izjavljuje da je ovaj proizvod usklađen sa sljedećim direktivama:

Direktiva o radijskoj opremi i telekomunikacijskoj terminalnoj opremi 1999/5/EC
Direktiva o elektromagnetskoj kompatibilnosti 2004/108/EC
Direktiva o niskonaponskoj opremi 2006/95/EC
ErP direktiva 2009/125/EC
RoHS direktiva 2011/65/EU

Opisani proizvodi usklađeni su sa ključnim zahtjevima navedenih direktiva.

Predstavnik za Europu:
LG Electronics Krijgsman 1, 1186 DM Amstelveen, Holandija

Македонски

Известување за усогласеност со ЕУ:
LG Electronics јавно изјавува дека овој производ е во согласност со следните директиви.

R&TTE директива 1999/5/EC
EMC директива 2004/108/EC
Директива за НИЗОК НАПОН 2006/95/EC
ErP директива 2009/125/EC
RoHS директива 2011/65/EU

Производите опишани погоре ги исполнуваат основните услови од посочените директиви.

Европски претставник:
LG Electronics Krijgsman 1, 1186 DM Amstelveen, Холандија

Қазақша

ЕО сәйкестік туралы ескертуі:
LG Electronics осы құжат арқылы бұл құрылғының мына директиваларға сай екенін мәлімдейді.

Радио және телекоммуникациялық жабдықтардың 1999/5/EC директивасы
2004/108/EC электромагниттік үйлесімділік директивасы
Төмен кернеулі жабдықтардың 2006/95/EC директивасы
2009/125/EC санды ErP директивасы
2011/65/EU санды RoHS директивасы

Жоғарыда сипатталған өнімдер көрсетілген директивалардың негізгі талаптарына сай келеді.

Еуропадағы өкілдік:
LG Electronics Krijgsman 1, 1186 DM Amstelveen, Нидерланд

Русский

Уведомление о соответствии нормам ЕС:
Компания LG Electronics настоящим заявляет о том, что данное изделие соответствует следующим директивам.

Директива R&TTE 1999/5/EC
Директива EMC 2004/108/EC
Директива LOW VOLTAGE 2006/95/EC
Директива ErP 2009/125/EC
Директива RoHS 2011/65/EU

Описанные выше изделия соответствуют основным требованиям указанных директив.

Представительство в Европе:
LG Electronics Krijgsman 1, 1186 DM Amstelveen, Нидерланды

Українська

Підтвердження відповідності стандартам ЄС:
Цим компанія LG Electronics підтверджує відповідність цього продукту вимогам директив, що перелічені нижче.

Директива R&TTE, 1999/5/EC
Директива EMC, 2004/108/EC
Директива НИЗЬКОЇ НАПРУГИ, 2006/95/EC
Директива ErP, 2009/125/EC
Директива RoHS, 2011/65/EU

Описані вище продукти відповідають основним вимогам вказаних директив.

Уповноважена особа у Європі:
LG Electronics Krijgsman 1, 1186 DM Amstelveen, Нідерланди

Wireless TV

(Only Wi-Fi built-in model)

CE0197①

English

LG Electronics hereby declares that this product is in compliance with the following Directives.

R&TTE Directive 1999/5/EC
EMC Directive 2004/108/EC
LOW VOLTAGE Directive 2006/95/EC
ErP Directive 2009/125/EC
RoHS Directive 2011/65/EU

The products described above comply with the essential requirements of the directives specified.
This device is a 2.4 and 5 GHz wideband transmission system, intended for use in all EU member states and EFTA countries, except in France and Italy where restrictive use applies.
In Italy the end-user should apply for a license at the national spectrum authorities in order to obtain authorization to use the device for setting up outdoor radio links and/or for supplying public access to telecommunications and/or network services.
This device may not be used for setting up outdoor radio links in France and in some areas the RF output power may be limited to 10 mW EIRP in the frequency range of 2454 – 2483.5 MHz. For detailed information the end user should contact the national spectrum authority in France.

European representative:
LG Electronics Inc. Krijgsman 1, 1186 DM Amstelveen, The Netherlands

The product is designed for indoor use only.

CE Notified Body statement:
This is a Class B product. In a domestic environment, this product may cause radio interference, in which case the user may be required to take adequate measures.

Deutsch

EU-Konformitätserklärung:
LG Electronics erklärt hiermit, dass dieses Produkt den folgenden Richtlinien entspricht:

R&TTE-Richtlinie 1999/5/EC
EMC-Richtlinie 2004/108/EC
Niederspannungsrichtlinie 2006/95/EC

ErP-Richtlinie 2009/125/EG
RoHS-Richtlinie 2011/65/EU

Die oben beschriebenen Produkte entsprechen den grundlegenden Anforderungen der angegebenen Richtlinien.

Vertreter für Europa:
LG Electronics Inc. Krijgsman 1, 1186 DM Amstelveen, Niederlande

Nur zur Verwendung in Innenräumen.

Français

Notice de conformité UE:
LG Electronics atteste que ces produits est en conformité avec les Directives suivantes.

Directive 1999/5/CE des R&TTE
Directive 2004/108/CE EMC
Directive 2006/95/CE des appareils basse tension
Directive ErP 2009/125/EC
Directive RoHS 2011/65/EU

Les produits décrits ci-dessus sont en conformité avec les exigences essentiels des directives spécifiées.

Représentant en Europe :
LG Electronics Inc. Krijgsman 1, 1186 DM Amstelveen, Pays-Bas

Usage intérieur uniquement.

Italiano

Avviso di conformità EU:
LG dichiara che questo prodotto è conforme alle seguenti direttive.

Direttiva R&TTE 1999/5/CE
Direttiva EMC 2004/108/CE
Direttiva BASSA TENSIONE 2006/95/CE
Direttiva ErP 2009/125/CE
Direttiva RoHS 2011/65/UE

I prodotti descritti sopra sono conformi ai requisiti essenziali delle direttive specificate.

Rappresentante europeo:
LG Electronics Inc. Krijgsman 1, 1186 DM Amstelveen, Paesi Bassi

Solo per uso interno.

Español

Aviso de conformidad con la UE:
Por la presente, LG Electronics declara que este producto cumple con las siguientes directivas.

Directiva sobre equipos radioeléctricos y equipos terminales de telecomunicación 1999/5/CE
Directiva sobre compatibilidad electromagnética 2004/108/CE
Directiva sobre baja tensión 2006/95/CE
Directiva ErP 2009/125/EC
Directiva RoHS 2011/65/EU

Los productos descritos anteriormente cumplen con los requisitos esenciales de las directivas especificadas.

Representante europeo:
LG Electronics Inc. Krijgsman 1, 1186 DM Amstelveen, Países Bajos

Sólo para uso en interiores.

Português

Aviso de conformidade da UE:
A LG Electronics declara por este meio que este produto está em conformidade com as seguintes Directivas.

Directiva R&TTE 1999/5/CE
Directiva relativa à compatibilidade electromagnética 2004/108/CE
Directiva para equipamentos de BAIXA TENSÃO 2006/95/CE
Directiva relativa a ErP (Produtos relacionados com energia) 2009/125/EC
Directiva relativa à RoHS (Restrição de Certas Substâncias Perigosas) 2011/65/EU

Os produtos acima descritos estão em conformidade com os requisitos essenciais das directivas especificadas.

Representante europeu:
LG Electronics Inc. Krijgsman 1, 1186 DM Amstelveen, Holanda

Apenas para uso em espaços interiores.

Nederlands

Conformiteitsverklaring (EU):
LG verklaart hierbij dat dit product voldoet aan de volgende richtlijnen.

R&TTE-richtlijn 1999/5/EC
EMC-richtlijn 2004/108/EC
Laagspanningsrichtlijn 2006/95/EC
Europese Richtlijn 2009/125/EG
Europese Richtlijn 2011/65/EU

De hierboven genoemde producten voldoen aan de essentiële voorwaarden van de gespecificeerde

richtlijnen.

Europees hoofdkantoor:
LG Electronics Inc. Krijgsman 1, 1186 DM Amstelveen, Nederland

Alleen voor gebruik binnen.

Ελληνικά

Δήλωση συμμόρφωσης Ε.Ε.:
Η LG Electronics δηλώνει ότι το παρόν προϊόν συμμορφώνεται με τις εξής Οδηγίες:

Οδηγία 1999/5/ΕΚ περί Ραδιοεξοπλισμού και Τηλεπικοινωνιακού Τερματικού Εξοπλισμού (R&TTE)
Οδηγία 2004/108/ΕΚ περί Ηλεκτρομαγνητικής Συμβατότητας
Οδηγία 2006/95/ΕΚ περί Χαμηλής Τάσης
Οδηγία ErP 2009/125/ΕΚ
Οδηγία RoHS 2011/65/ΕΕ

Τα παραπάνω προϊόντα συμμορφώνονται με τις ουσιώδεις απαιτήσεις των ανωτέρω οδηγιών.

Ευρωπαϊκός αντιπρόσωπος:
LG Electronics Krijgsman 1, 1186 DM Amstelveen, Ολλανδία

Magyar

EU megfelelőségi nyilatkozat:
Az LG Electronics ezúton kijelenti, hogy a termék megfelel a következő irányelvek előírásainak:

1999/5/EK R&TTE irányelv
2004/108/EK EMC irányelv
2006/95/EK KISFESZÜLTSÉGŰ irányelv
2009/125/EK ErP irányelv
2011/65/EU RoHS irányelv

A fentiekben bemutatott termékek teljesítik a megadott irányelvek alapvető előírásait.

Európai képviselet:
LG Electronics Krijgsman 1, 1186 DM Amstelveen, Hollandia

Csak beltéri használatra.

Polski

Deklaracja zgodności z normami UE:
Firma LG Electronics niniejszym zaświadcza, że ten produkt spełnia wymagania poniższych dyrektyw.

Dyrektywa 1999/5/WE w sprawie urządzeń radiowych i końcowych urządzeń telekomunikacyjnych
Dyrektywa 2004/108/WE dotycząca kompatybilności elektromagnetycznej
Dyrektywa 2006/95/WE dotycząca sprzętu elektrycznego przeznaczonego do stosowania w określonych granicach napięcia
Dyrektywa 2009/125/WE w sprawie wymogów dotyczących ekoprojektu dla produktów związanych z energią
Dyrektywa RoHS 2011/65/UE w sprawie ograniczenia stosowania substancji niebezpiecznych

Powyżej wymienione produkty spełniają zasadnicze wymagania wymienionych dyrektyw.

Przedstawiciel na Europę:
LG Electronics Krijgsman 1, 1186 DM Amstelveen, Holandia

Tylko do użytku wewnątrz pomieszczeń.

Česky

Prohlášení o shodě s legislativou EU:
Společnost LG Electronics tímto prohlašuje, že tento výrobek je ve shodě s následujícími směrnicemi.

Směrnice o radiokomunikačních a telekomunikačních koncových zařízeních 1999/5/EC
Směrnice o elektromagnetické kompatibilitě 2004/108/EC
Směrnice o nízkém napětí 2006/95/EC
Směrnice ErP 2009/125/EC
Směrnice RoHS 2011/65/EU

Výše popisované produkty jsou v souladu se základními požadavky uvedených směrnic.

Zastoupení v Evropě:
LG Electronics Krijgsman 1, 1186 DM Amstelveen, Nizozemsko

Pouze pro vnitřní použití.

Slovenčina

Vyhlásenie o zhode pre oblasť EÚ:
Spoločnosť LG Electronics týmto vyhlasuje, že tento výrobok dosahuje súlad s nasledujúcimi smernicami.

Smernica R&TTE 1999/5/ES
Smernica EMC 2004/108/ES
Smernica o slaboprúde 2006/95/ES
Smernica ErP 2009/125/ES
Smernica RoHS 2011/65/EÚ

Vyššie popísané výrobky vyhovujú základným požiadavkám uvedených smerníc.

Európske zastupiteľstvo:

LG Electronics Krijgsman 1, 1186 DM Amstelveen, Holandsko

Len na použitie v interiéri.

Română

Declaraţie de conformitate UE:
Prin prezenta, LG Electronics declară că acest produs este conform cu următoarele Directive.

Directiva R&TTE 1999/5/CE
Directiva EMC 2004/108/CE
Directiva pentru tensiune joasă 2006/95/CE
Directiva ErP 2009/125/CE
Directiva RoHS 2011/65/UE

Produsul descris mai sus este conform cu cerinţele esenţiale ale directivelor specificate.

Reprezentant european:
LG Electronics Krijgsman 1, 1186 DM Amstelveen, Olanda

Doar pentru utilizare în interior.

Български

Бележка относно съответствие с нормите на ЕС:
С настоящото LG Electronics декларира, че този продукт съответства на следните директиви.

R&TTE директива 1999/5/EC
EMC директива 2004/108/EC
Директива за НИСКО НАПРЕЖЕНИЕ 2006/95/EC
ErP Директива 2009/125/EC
RoHS Директива 2011/65/EU

Описаният по-горе продукт съответства на основните изисквания на посочените директиви.

Европейски представител:
LG Electronics Krijgsman 1, 1186 DM Amstelveen, Нидерландия

За употреба само в закрити помещения.

Svenska

Meddelande om EU-regelefterlevnad:
LG Electronics intygar härmed att den här produkten uppfyller följande gällande direktiv:

R&TTE-direktivet 1999/5/EG
EMC-direktivet 2004/108/EG
Lågspänningsdirektivet 2006/95/EG
ErP-direktivet 2009/125/EG
RoHS-direktivet 2011/65/EG

Ovan nämnda produkter stämmer överens med de grundläggande kraven som anges i direktiven.

Europeisk representant:
LG Electronics Krijgsman 1, 1186 DM Amstelveen, Nederländerna

Används endast inomhus.

Norsk

Samsvarsmerknad for EU:
LG Electronics erklærer herved at dette produktet er i henhold til de følgende direktivene.

R&TTE-direktiv 1999/5/EC
EMC-direktiv 2004/108/EC
Lavspenningsdirektiv 2006/95/EC
ErP-direktiv 2009/125/EC
RoHS-direktiv 2011/65/EU

Produktene som beskrives ovenfor, overholder kravene i de angitte direktivene.

Europeisk representant:
LG Electronics Krijgsman 1, 1186 DM Amstelveen, Nederland

Bare til innendørs bruk.

Dansk

EU-overensstemmelseserklæring:
LG Electronics erklærer hermed, at dette produkt overholder følgende direktiver.

R&TTE-direktiv 1999/5/EC
EMC-direktiv 2004/108/EC
LOW VOLTAGE-direktiv 2006/95/EC
ErP-direktiv 2009/125/EC
RoHS-direktiv 2011/65/EU

De produkter, der er beskrevet ovenfor, overholder de vigtigste krav i de angivne direktiver.

Europæisk repræsentant:
LG Electronics Krijgsman 1, 1186 DM Amstelveen, Holland

Kun til indendørs brug.

Suomi

EU-vaatimustenmukaisuusilmoitus:
LG Electronics vakuuttaa täten, että tämä tuote on seuraavien direktiivien mukainen.

R&TTE-direktiivi 1999/5/EC
EMC-direktiivi 2004/108/EC
LOW VOLTAGE -direktiivi 2006/95/EC
ErP-direktiivi 2009/125/EY
RoHS-direktiivi 2011/65/EU

Edellä mainitut tuotteet ovat eriteltyjen direktiivien oleellisten vaatimusten mukaisia.

Edustaja Euroopassa:
LG Electronics Krijgsman 1, 1186 DM Amstelveen, Alankomaat

Vain sisäkäyttöön.

Eesti

EÜ vastavuskinnitus:
Käesolevaga kinnitab LG Electronics, et see toode ühildub järg¬miste direktiividega..

Raadioseadmete ja telekommunikatsioonivõrgu lõppseadmete direktiiv 1999/5/EÜ
Elektromagnetilise ühilduvuse direktiiv 2004/108/EÜ
MADALPINGESEADMETE direktiiv 2006/95/EÜ
Energiamõjuga toodete direktiiv 2009/125/EÜ
RoHS-direktiiv 2011/65/EL

Eelnimetatud tooted vastavad märgitud direktiivide oluliste nõuetele.

Euroopa esindus:
LG Electronics Krijgsman 1, 1186 DM Amstelveen, Holland

Kasutada ainult siseruumides.

Lietuvių k.

EB atitikties deklaracija:
„LG Electronics“ pareiškia, kad šis produktas atitinka tokias direktyvas.

R&TTE direktyvą 1999/5/EB
EMS direktyvą 2004/108/EB
Žemos įtampos direktyvą 2006/95/EB
ErP direktyva 2009/125/EB
RoHS direktyva 2011/65/ES

Aukščiau įvardinti produktai atitinka nurodytų direktyvų esminius reikalavimus.

Atstovas Europoje:
LG Electronics Krijgsman 1, 1186 DM Amstelveen, Nyderlandai

Naudoti tik patalpose.

Latviešu

Paziņojums par atbilstību ES direktīvām:
LG Electronics ar šo paziņo, ka šis izstrādājums atbilst turpmāk minētajām direktīvām.

R&TTE direktīva 1999/5/EK
Elektromagnētiskās savietojamības direktīva 2004/108/EK
Direktīva par zemspriegumu 2006/95/EK
Elektromagnētiskās savietojamības direktīva 2009/125/EK
RoHS direktīva 2011/65/ES

Iepriekš aprakstītie izstrādājumi atbilst norādīto direktīvu būtiskajām prasībām.

Pārstāvniecība Eiropā:
LG Electronics Krijgsman 1, 1186 DM Amstelveen, Nīderlande

Tikai lietošanai telpās.

Slovenščina

Izjava o skladnosti EU:
LG Electronics izjavlja, da je ta izdelek v skladu z naslednjimi direktivami.

Direktiva 1999/5/ES o radijski opremi in telekomunikacijski terminalski opremi ter medsebojnem priznavanju skladnosti te opreme
Direktiva 2004/108/ES o elektromagnetni združljivosti
Direktiva 2006/95/ES o nizki napetosti
Direktiva 2009/125/ES o energijskih izdelkih
Direktiva 2011/65/EU o standardu RoHS

Zgoraj opisani izdelki izpolnjujejo bistvene zahteve navedenih direktiv.

Evropski zastopnik:
LG Electronics Krijgsman 1, 1186 DM Amstelveen, Nizozemska

Samo za uporabo v zaprtih prostorih.

Srpski

Napomena o usklađenosti sa standardima:
LG Electronics ovim izjavljuje da je ovaj proizvod usklađen sa sledećim direktivama:.

R&TTE direktiva 1999/5/EC
EMC direktiva 2004/108/EC
NISKONAPONSKA direktiva 2006/95/EC
ErP direktiva 2009/125/EC
RoHS direktiva 2011/65/EU

Prethodno opisani proizvodi usklađeni su s osnovnim

zahtevima iz navedenih direktiva.

Evropski predstavnik:
LG Electronics Krijgsman 1, 1186 DM Amstelveen, Holandija

Koristite samo u zatvorenom prostoru.

Hrvatski

Napomena o sukladnosti s EU standardima:
LG Electronics ovim putem izjavljuje da je ovaj proizvod sukladan sljedećim Direktivama.

R&TTE direktiva 1999/5/EC
R&EMC direktiva 2004/108/EC
Direktiva o niskonaponskim uređajima 2006/95/EC
ErP direktiva 2009/125/EC
RoHS direktiva 2011/65/EU

Gore opisan proizvod sukladan je osnovnim zahtjevima navedenih direktiva.

Zastupnik za Europu:
LG Electronics Krijgsman 1, 1186 DM Amstelveen, Nizozemska

Korištenje isključivo u zatvorenom prostoru.

Türkçe

AB Uygunluk Bildirimi:
LG Electronics, burada bu ürünün aşağıdaki Direktifler ile uyumlu olduğunu beyan eder.

R&TTE Direktifi 1999/5/EC
EMC Direktifi 2004/108/EC
DÜŞÜK VOLTAJ Direktifi 2006/95/EC
ErP Direktifi 2009/125/EC
RoHS Direktifi 2011/65/EU

Yukarıda anlatılan ürünler, belirtilen direktiflerin gereklilikleri ile uyumludur.

Avrupa temsilciliği :
LG Electronics Krijgsman 1, 1186 DM Amstelveen, Hollanda

Sadece kapalı alanda kullanım.

Shqip

Deklarata e Konformitetit për BE-në:
LG Electronics nëpërmjet kësaj deklaron se ky produkt është në përputhje me Direktivat e mëposhtme.

Direktivën R&TTE 1999/5/KE
Direktivën EMC 2004/108/KE
Direktivën për VOLTAZHIN E ULËT 2006/95/KE
Direktiva ErP 2009/125/KE
Direktiva RoHS 2011/65/BE

Produktet e përshkruara më lart përputhen me kërkesat thelbësore të direktivave të specifikuara.

Përfaqësuesi evropian:
LG Electronics Krijgsman 1, 1186 DM Amstelveen, Holandë

Vetëm për përdorim të brendshëm.

Bosanski

Napomena o usklađenosti sa propisima EU:
LG Electronics ovim putem izjavljuje da je ovaj proizvod usklađen sa sljedećim direktivama:

Direktiva o radijskoj opremi i telekomunikacijskoj terminalnoj opremi 1999/5/EC
Direktiva o elektromagnetskoj kompatibilnosti 2004/108/EC
Direktiva o niskonaponskoj opremi 2006/95/EC
ErP direktiva 2009/125/EC
RoHS direktiva 2011/65/EU

Opisani proizvodi usklađeni su sa ključnim zahtjevima navedenih direktiva.

Predstavnik za Europu:
LG Electronics Krijgsman 1, 1186 DM Amstelveen, Holandija

Samo za unutarnju upotrebu.

Македонски

Известување за усогласеност со ЕУ:
LG Electronics јавно изјавува дека овој производ е во согласност со следните директиви.

R&TTE директива 1999/5/EC
EMC директива 2004/108/EC
Директива за НИЗОК НАПОН 2006/95/EC
ErP директива 2009/125/EC
RoHS директива 2011/65/EU

Производите опишани погоре ги исполнуваат основните услови од посочените директиви.

Европски претставник:
LG Electronics Krijgsman 1, 1186 DM Amstelveen, Холандија

За употреба само во затворени простории.

Қазақша

ЕО сәйкестік туралы ескертуі:

LG Electronics осы құжат арқылы бұл құрылғының мына директиваларға сай екенін мәлімдейді.

Радио және телекоммуникациялық жабдықтардың 1999/5/EC директивасы
2004/108/EC электромагниттік үйлесімділік директивасы
Төмен кернеулі жабдықтардың 2006/95/EC директивасы
2009/125/EC санды ErP директивасы
2011/65/EU санды RoHS директивасы

Жоғарыда сипатталған өнімдер көрсетілген директивалардың негізгі талаптарына сай келеді.

Еуропадағы өкілдік:
LG Electronics Krijgsman 1, 1186 DM Amstelveen, Нидерланд

Тек ғимарат ішінде қолдануға арналған.

Русский

Уведомление о соответствии нормам ЕС:
Компания LG Electronics настоящим заявляет о том, что данное изделие соответствует следующим директивам.

Директива R&TTE 1999/5/EC
Директива EMC 2004/108/EC
Директива LOW VOLTAGE 2006/95/EC
Директива ErP 2009/125/EC
Директива RoHS 2011/65/EU

Описанные выше изделия соответствуют основным требованиям указанных директив.

Представительство в Европе:
LG Electronics Krijgsman 1, 1186 DM Amstelveen, Нидерланды

Только для использование в помещении.

Українська

Підтвердження відповідності стандартам ЄС:
Цим компанія LG Electronics підтверджує відповідність цього продукту вимогам директив, що перелічені нижче.

Директива R&TTE, 1999/5/EC
Директива EMC, 2004/108/EC
Директива НИЗЬКОЇ НАПРУГИ, 2006/95/EC
Директива ErP, 2009/125/EC
Директива RoHS, 2011/65/EU

Описані вище продукти відповідають основним вимогам вказаних директив.

Уповноважена особа у Європі:
LG Electronics Krijgsman 1, 1186 DM Amstelveen, Нідерланди

Призначено лише для використання в приміщенні.

Environmental Information

LG Recycling Policy

LG Electronics offers a customized e-waste take-back & recycling service that meets local needs and requirements in the countries where e-waste regulations are in place, and also provides product and packaging take-back & recycling service voluntarily in some countries. LG Electronics evaluates products' recyclability at the design step using LG's recyclability evaluation tool, with the goal of improving recyclability where practicable. Through these activities, LG seeks to contribute to conserving natural resources and protecting the environment.
For more information about the LG Recycling Policy, please visit our global site at http://www.lg.com/global/sustainability/environment/take-back-recycling

EU ecolabel (Only EU ecolabel applied model)

EU Ecolabel
www.ecolabel.eu

Better for the environment...

- High Energy Efficiency
- Reduced CO2 emissions
- Designed to facilitate repair and recycling

... better for you.

EU Ecolabel : PL/22/004

LGE announced the 'LG Declaration for a Cleaner Environment 'in 1994, and this ideal has served as a Guiding managerial principle ever since. The Declaration is a foundation that has allowed us to undertake Environmentally friendly activities in careful consideration of economic, environmental, and social aspects. We promote activities for environmental preservation, and we specifically develop our products to embrace the Concept of environment- friendly through whole process from getting raw materials, production, transportation,
usage and end-of-life. These environmental characteristics are endorsed by the award of the European Commission as approval of the product environmental status for energy saving, Facilities for recycling and a host of other features.
The full list of criteria and more information on the eco label can be found at the web-site address :
http://www.ecolabel.eu

Energy Saving

Energy efficiency cuts energy consumption and thus saves money by reducing electricity bills.

The following indications allow to reduce power consumption when the television is not being watched:

- turning the television off at its mains supply, or un-plugging it, will cut energy use to zero for all televisions, and is recommended when the television is not being used for a long time, e.g. when on holiday,
- putting the television into standby mode, will reduce energy consumption, but will still draw some power,
- reducing the brightness of the screen will reduce energy use.

WEEE

ENGLISH

Disposal of your old appliance

1. This crossed-out wheeled bin symbol indicates that waste electrical and electronic products (WEEE) should be disposed of separately from the municipal waste stream.
2. Old electrical products can contain hazardous substances so correct disposal of your old appliance will help prevent potential negative consequences for the environment and human health. Your old appliance may contain reusable parts that could be used to repair other products, and other valuable materials that can be recycled to conserve limited resources.
3. You can take your appliance either to the shop where you purchased the product, or contact your local government waste office for details of your nearest authorised WEEE collection point. For the most up to date information for your country please see *www.lg.com/global/recycling*

FRANÇAIS

Recyclage de votre ancien appareil

1. Ce symbole de poubelle barrée d'une croix indique que votre équipement électrique et électronique (EEE) ne doit pas être jeté avec les ordures ménagères. Il doit faire l'objet d'un tri et d'une collecte sélective séparée.
2. Les équipements électriques que vous jetez peuvent contenir des substances dangereuses. Il est donc important de les jeter de façon appropriée afin d'éviter des impacts négatifs sur l'environnement et la santé humaine. L'équipement que vous jetez peut également contenir des pièces réutilisables pour la réparation d'autres produits ainsi que des matériaux précieux pouvant être recyclés pour préserver les ressources de la planète.
3. Vous pouvez rapporter votre appareil au commerçant qui vous l'a vendu ou contacter votre collectivité locale pour connaitre les points de collecte de votre EEE. Vous trouverez également des informations à jour concernant votre pays en allant sur *www.quefairedemesdechets.fr*

ITALIANO

Smaltimento delle apparecchiature obsolete

1. Tutte le apparecchiature elettriche ed elettroniche, contrassegnate da questo simbolo ("bidone della spazzatura barrato da una croce"), devono essere raccolte e smaltite separatamente rispetto agli altri rifiuti urbani misti mediante impianti di raccolta specifici installati da enti pubblici o dalle autorità locali. Si ricorda che gli utenti finali domestici possono consegnare gratuitamente le apparecchiature elettriche ed elettroniche a fine vita presso il punto vendita all'atto dell'acquisto di una nuova apparecchiatura equivalente. Gli utenti finali domestici possono inoltre consegnare gratuitamente apparecchiature elettriche ed elettroniche di piccolissime dimensioni (non eccedenti i 25 cm) a fine vita direttamente presso un punto vendita a ciò abilitato, senza obbligo di acquistare una apparecchiatura nuova di tipo equivalente. Si prega di informarsi previamente presso il punto vendita prescelto circa tale ultima modalità di conferimento dell'apparecchiatura a fine vita.
2. Il corretto smaltimento dell'unità obsoleta contribuisce a prevenire possibili conseguenze negative sulla salute degli individui e sull'ambiente. Una gestione responsabile del fine vita delle apparecchiature elettriche ed elettroniche da parte degli utenti contribuisce al riutilizzo, al riciclaggio ed al recupero sostenibile dei prodotti obsoleti e dei relativi materiali.
3. Per informazioni più dettagliate sullo smaltimento delle apparecchiature obsolete, contattare l'ufficio del comune di residenza, il servizio di smaltimento rifiuti o il punto vendita in cui è stato acquistato il prodotto. (*www.lg.com/global/recycling*)

SVENSKA

Kassera den gamla apparaten

1. Den överkorsade soptunnesymbolen indikerar att elektroniskt och elektrickt avfall (WEEE) ska kasseras separat från hushållsavfallet och lämnas in till av kommunen anvisat ställe för återvinning.
2. Gamla elektroniska och elektriska produkter kan innehålla farliga substanser så korrekt avfallshantering av produkten förhindrar negativa konsekvenser för miljön och den mänskliga hälsan. Din gamla apparat kan innehålla återanvändningsbara delar som används för att reparera andra produkter och andra värdefulla material som kan återvinnas för att spara begränsade resurser.
3. Du kan ta din gamla apparat till butiken där du köpte produkten, eller kontakta din kommun för information om närmaste WEEE-uppsamlingsställe. För den mest uppdateade informationen i ditt land, gå till *www.lg.com/global/recycling*

NEDERLANDS

Verwijdering van uw oude apparaat

1. Dit symbool van de doorgekruiste vuilnisbak geeft aan dat afgedankte elektrische en elektronische producten (WEEE) afzonderlijk van het huishoudelijke afval moeten worden verwijderd.
2. Oude elektrische producten kunnen gevaarlijke stoffen bevatten, dus een juiste verwijdering van uw oude apparaat helpt bij het voorkomen van mogelijke negatieve gevolgen voor het milieu en de volksgezondheid. Uw oude apparaat kan herbruikbare onderdelen bevatten die gebruikt zouden kunnen worden voor het repareren van andere producten, en andere waardevolle materialen die kunnen worden gerecycleerd voor het behoud van beperkte grondstoffen.
3. U kunt uw apparaat meenemen naar de winkel waar u het product hebt gekocht, of u kunt contact opnemen met uw plaatselijke afvalinstantie voor de gegevens van uw dichtstbijzijnde geautoriseerde WEEE-verzamelpunt. Voor de meest geactualiseerde informatie voor uw land wordt verwezen naar *www.lg.com/global/recycling*

SUOMI

Vanhan laitteesi hävittäminen

1. Tämä ylirastitettu jäteastian merkki ilmaisee, että sähkö- ja elektronikkalaitteiden jätteet (WEEE) tulee pitää erillään kotitalousjätteestä ja viedä kunnalliseen kierrätyskeskukseen.
2. Vanhat sähkötuotteet voivat pitää sisällään vaarallisia aineita, joten loppuun käytetyn laitteen oikea hävittäminen ehkäisee ympäristö- ja terveyshaittoja. Vanha laitteesi saattaa pitää sisällään uudelleen käytettäviä osia, joita voidaan käyttää korjaamaan muita tuotteita sekä arvokkaita materiaaleja, joita voidaan kierrättää rajoitettujen resurssien säästämiseksi.
3. Voit viedä laitteesi joko liikkeeseen, josta hankit laitteen, tai ottaa yhteyttä paikallishallintosi ympäristötoimistoon koskien lähintä valtuutettua WEEE -keräyspistettä. Kaikkein viimeisimmät tiedot koskien maatasi, ks. osoitteessa *www.lg.com/global/recycling*

DEUTSCH

Entsorgung Ihrer Altgeräte

1. Das durchgestrichene Symbol eines fahrbaren Abfallbehälters weist darauf hin, dass Elektro- und Elektronik-Produkte (WEEE) getrennt vom Hausmüll entsorgt werden müssen.
2. Alte elektrische Produkte können gefährliche Substanzen enthalten, die eine korrekte Entsorgung dieser Altgeräte erforderlich machen, um schädliche Auswirkungen auf die Umwelt und die menschliche Gesundheit zu vermeiden. Ihre ausgedienten Geräte können wiederverwendbare Teile enthalten, mit denen möglicherweise andere Produkte repariert werden können, aber auch sonstige wertvolle Materialien enthalten, die zur Schonung knapper Ressourcen recycelt werden können.
3. Sie können Ihr Gerät entweder in den Laden zurückbringen, in dem Sie das Produkt ursprünglich erworben haben oder Sie kontaktieren Ihre Gemeindeabfallstelle für Informationen über die nächstgelegene autorisierte WEEE Sammelstelle. Die aktuellsten Informationen für Ihr Land finden Sie unter *www.lg.com/global/recycling*

DANSK

Bortskaffelse af dit gamle apparat

1. Dette symbol med en affaldsspand med kryds over angiver at elektrisk og elektronisk affald (WEEE) skal bortskaffes og genbruges korrekt, adskilt fra kommunens husholdningsaffald.
2. Gamle elektriske produkter kan indeholde farlige stoffer, så når du bortskaffer dit gamle apparat på korrekt vis, hjælper du med at forhindre mulige negative konsekvenser for miljø og mennesker. Dit gamle apparat kan indeholde dele som kan genbruges, fx til at reparere andre produkter, eller værdifulde materialer som kan genbruges og derved begrænse spild af værdifulde ressourcer.
3. Du kan enten tage apparatet til den butik hvor du købte det, eller kontakte dit lokale affaldskontor angående oplysninger om det nærmeste, autoriserede WEEE-samlepunkt. Find de sidste nye oplysninger for dit land på *www.lg.com/global/recycling*

ΕΛΛΗΝΙΚΑ

Απόρριψη της παλιάς σας συσκευής

1. Αυτό το διαγραμμένο σύμβολο του τροχοφόρου κάδου υποδεικνύει ότι τα απόβλητα ηλεκτρικών και ηλεκτρονικών προϊόντων (ΑΗΗΕ) πρέπει να απορρίπτονται χωριστά από τα γενικά οικιακά απορρίμματα.
2. Τα παλιά ηλεκτρικά προϊόντα μπορεί να περιέχουν επικίνδυνες ουσίες και ως εκ τούτου η σωστή απόρριψη της παλιάς σας συσκευής αποτρέπει ενδεχόμενες αρνητικές συνέπειες για το περιβάλλον και την ανθρώπινη υγεία. Η παλιά σας συσκευή μπορεί να περιέχει επαναχρησιμοποιήσιμα ανταλλακτικά που θα μπορούσαν να χρησιμοποιηθούν για την επισκευή άλλων προϊόντων, καθώς και άλλα υλικά αξίας που μπορούν να ανακυκλωθούν για εξοικονόμηση των περιορισμένων φυσικών πόρων.
3. Μπορείτε να πάτε τη συσκευή σας, είτε στο κατάστημα από το οποίο αγοράσατε το προϊόν, ή να επικοινωνήσετε το τοπικό

γραφείο απορριμμάτων για λεπτομέρειες σχετικά με το πλησιέστερο εγκεκριμένο σημείο συλλογής ΑΗΗΕ (Απόβλητα Ηλεκτρικών και Ηλεκτρονικών Συσκευών). Για τις πιο πρόσφατες πληροφορίες για τη χώρα σας επισκεφθείτε τη διεύθυνση *www.lg.com/global/recycling*

ESPAÑOL

Símbolo para marcar AEE

1. El símbolo del contenedor de basura tachado con un aspa indica que la recogida separada de aparatos eléctricos y electrónicos (AEE) debe realizarse de manera separada.
2. Los productos eléctricos antiguos pueden contener sustancias peligrosas de modo que la correcta eliminación del antiguo aparato ayudará a evitar posibles consecuencias negativas para el medio ambiente y para la salud humana. El antiguo aparato puede contener piezas reutilizables que podrían utilizarse para reparar otros productos y otros materiales valiosos que pueden reciclarse para conservar los recursos limitados.
3. Puede llevar el aparato a cualquiera de los centros autorizados para su recogida. Para obtener la información más actualizada para su país por favor visite *www.lg.com/global/recycling*

PORTUGUÊS

Eliminação do seu aparelho usado

1. Este símbolo de um caixote do lixo com rodas e linhas cruzadas sobrepostas indica que os resíduos de produtos elétricos e eletrónicos (WEEE) devem ser eliminados separadamente do lixo doméstico.
2. Os produtos elétricos usados podem conter substâncias perigosas, pelo que, a eliminação correta do seu aparelho usado pode contribuir para evitar potenciais danos para o ambiente e saúde humana. O seu aparelho usado pode conter peças reutilizáveis que podem ser usadas para reparar outros aparelhos e materiais úteis que podem ser reciclados para preservar os recursos limitados.
3. Pode levar o seu aparelho à loja onde o adquiriu ou contactar a sua entidade local de recolha e tratamento de resíduos para obter mais informações sobre o ponto de recolha WEEE autorizado mais próximo. Para obter informações mais atualizadas relativas ao seu país, visite *www.lg.com/global/recycling*

SLOVENČINA

Zneškodnenie starého spotrebiča

1. Tento symbol prečiarknutého odpadkového koša na kolieskach znamená, že odpad z elektrických a elektronických zariadení (WEEE) musí byť zneškodnený samostatne od komunálneho odpadu.
2. Staré elektrické produkty môžu obsahovať nebezpečné latky, preto správne zneškodnenie vášho starého spotrebiča pomôže zabrániť potenciálnym negatívnym dopadom na prostredie a ľudské zdravie. Váš starý spotrebič môže obsahovať diely, ktoré možno opätovne použiť na opravu iných produktov, a iné cenné materiály, ktoré možno recyklovať s cieľom chrániť obmedzené zdroje.
3. Svoj spotrebič môžete zaniesť do predajne, kde ste produkt zakúpili, alebo sa môžete obrátiť na oddelenie odpadov miestnej samosprávy a požiadať o informácie o najbližšom zbernom mieste odpadu z elektrických a elektronických zariadení (WEEE). Najnovšie informácie platné pre vašu krajinu nájdete na stránke *www.lg.com/global/recycling*

ČESKY

Likvidace starého přístroje

1. Tento symbol přeškrtnutého koše značí, že odpad z elektrických a elektronických výrobků (WEEE) je nutné likvidovat odděleně od linky komunálního odpadu.
2. Staré elektrické výrobky mohou obsahovat nebezpečné látky, takže správná likvidace starých přístrojů pomůže zabránit potenciálním negativním důsledkům pro životní prostředí a lidské zdraví. Staré přístroje mohou obsahovat znovu použitelné díly, které lze použít k opravě dalších výrobků a další cenné materiály, které lze recyklovat a šetřit tak omezené zdroje.
3. Přístroj můžete zanést buď do obchodu, kde jste ho zakoupili nebo se obrátit na místní správu komunálních odpadů, kde získáte podrobné informace o autorizovaném sběrném místě WEEE. Pro poslední aktuální informace z vaší země si prosím prostudujte web *www.lg.com/global/recycling*

HRVATSKI

Zbrinjavanje starog uređaja

1. Ovaj simbol prekrižene kante za smeće na kotačićima označava kako se otpadni električni i električni proizvodi (WEEE) moraju zbrinjavati odvojeno od komunalnog otpada.
2. Dotrajali električni proizvodi mogu sadržavati opasne tvari stoga će ispravno zbirnjavanje vaših dotrajalih uređaja pomoći u sprječavanju potencijalnih negativnih posljedica na okoliš i ljudsko zdravlje. Vaš dotrajao uređaj može sadržavati dijelove koji se mogu ponovo iskoristiti za popravak drugih proizvoda te druge vrijedne materijale koji se mogu reciklirati i tako sačuvati ograničene resurse.
3. Ovisno o razini smetnje / štete i dobi stavke, stari proizvodi mogu se popraviti za više radnog života koji će spriječiti izbjeći otpada. Proizvodi koji nisu prikladni za ponovnu uporabu može se reciklirati da se oporavim vrijedne resurse i pomoći da se smanji globalno potrošnju novih sirovina.

4. Uređaj možete odjnjeti u trgovinu u kojoj ste kupili proizvod ili možete kontaktirati ured za zbrinjavanje otpada kod vaših mjesnih nadležnih tijela te od njih saznati više informacija o najbiližem ovlaštenom WEEE sabirnom centru. Za najnovije informacije iz vaše države molimo pogledajte internetske stranice *www.lg.com/global/recycling*

MAGYAR

A régi készülék ártalmatlanítása

1. A leselejtezett elektromos és elektronikai termékeket a háztartási hulladéktól elkülönítve kell begyűjteni, a jogszabályok által kijelölt módon és helyen.
2. Régi készülékeinek megfelelő leselejtezése segíthet megelőzni az esetleges egészségre vagy környezetre ártalmas hatásokat.
3. Ha további információra van szüksége régi készülékeinek leselejtezésével kapcsolatban, lépjen kapcsolatba velünk a *szelektalok.hu* oldalon ahol tájékoztatjuk Önt visszavételi, átvételi, gyűjtési és kezelési kötelezettségeinkről.

POLSKI

Utylizacja starego urządzenia

1. Symbol przekreślonego pojemnika na odpady na kółkach oznacza, że produkty elektryczne lub elektroniczne (WEEE) należy zutylizować poza obiegiem odpadów komunalnych.
2. Stare produkty elektroniczne mogą zawierać niebezpieczne substancje. Właściwa utylizacja starego urządzenia pozwoli uniknąć potencjalnych negatywnych skutków dla środowiska i zdrowia. Stare urządzenie może zawierać części wielokrotnego użytku, które mogą zostać wykorzystane do naprawy innych produktów lub inne wartościowe materiały, które można przetworzyć, aby oszczędzać zasoby naturalne.
3. Możesz zanieść urządzenie do sklepu, w którym zostało kupione lub skontaktować się z lokalnym urzędem gospodarki odpadami, aby uzyskać informacje o najbliższym punkcie zbiórki WEEE. Aby uzyskać aktualne informacje z zakresu gospodarki odpadami obowiązującej w Twoim kraju, odwiedź stronę *http://www.lg.com/global/sustainability/environment/take-back-recycling/global-network-europe* (plik PDF : „For more information about how to recycle LG products in your country".

EESTI

Teie vana seadme hävitamine

1. Läbitõmmatud ristiga prügikasti sümbol tähendab, et elektriliste ja elektrooniliste toodete (WEEE) jäätmeid tuleb olmeprügist eraldi hävitada.
2. Vanad elektriseadmed võivad sisaldada ohtlikke koostisosi, seega aitab prügi nõuetekohane hävitamine vältida võimalikku negatiivset mõju loodusele ja inimeste tervisele. Teie kasutatud seade võib sisaldada taaskasutatavaid osi, millega saab parandada teisi seadmeid ning muid väärtuslikke materjale, mida saab taaskasutada, et säilitada piiratud ressursse.
3. Saate viia oma seadme kas kauplusse, kust see on ostetud või võtta ühendust kohaliku prügiveo ettevõttega, et saada lisainfot oma lähima WEEE jäätmete kogumiskoha kohta. Kõige ajakohasemat infot oma riigi kohta vaadake *www.lg.com/global/recycling*

LATVIEŠU

Jūsu vecās ierīces likvidēšana

1. Šis simbols – pārsvītrota atkritumu tvertne uz riteņiem – norāda, ka elektrisko un elektronisko iekārtu atkritumi (EEIA) jālikvidē atsevišķi no sadzīves atkritumu plūsmas.
2. Veci elektriskie izstrādājumi var saturēt bīstamas vielas, tādēļ jūsu vecās ierīces pareiza likvidēšana palīdzēs novērst iespējamās negatīvās sekas videi un cilvēka veselībai. Jūsu vecā ierīce var saturēt vairākkārt izmantojamas detaļas, kuras var izmantot citu izstrādājumu remontam, un citus vērtīgus materiālus, kurus var pārstrādāt, tādējādi saglabājot ierobežotus resursus.
3. Jūs varat aiznest ierīci vai nu uz veikalu, kurā šo izstrādājumu iegādājieties, vai sazināties ar vietējās pašvaldības atkritumu savākšanas iestādi un uzzināt sīkāku informāciju par tuvāko oficiālo EEIA savākšanas punktu. Jaunāko informāciju par savu valsti skatiet vietnē *www.lg.com/global/recycling*

LIETUVIŲ K.

Seno prietaiso utilizavimas

1. Išbrauktos šiukšlių dėžės simbolis rodo, kad elektros ir elektronikos įrangos atliekos (EEĮA) turėtų būti utilizuojamos atskirai nuo komunalinių atliekų.
2. Senoje elektrinėje įrangoje gali būti pavojingų medžiagų, taigi tinkamas seno prietaiso utilizavimas padės apsisaugoti nuo galimų neigiamų pasekmių aplinkai ir žmonių sveikatai. Jūsų sename prietaise gali būti dalių, kurias galima panaudoti dar kartą taisant kitą įrangą ir kitų vertingų medžiagų, kurios gali būti perdirbamos siekiant tausoti ribotus išteklius.
3. Savo prietaisą galite nugabenti į parduotuvę, kurioje įrangą įsigijote, arba susisiekite su vietos valdžios atliekų tarnyba norėdami gauti artimiausio EEĮA surinkimo vietos informaciją. Norėdami gauti daugiau informacijos savo šalyje, apsilankykite *www.lg.com/global/recycling*

TÜRKÇE

Eski cihazınızın atılması

1. Tüm elektrikli ve elektronik atıklar, devlet ya da yerel yetkililer tarafından belirlenen toplama merkezlerinde ayrı olarak imha edilmelidir. Atık eletrikli ve elektronik aletler belediyeler tarafından kurulan toplama noktalarına teslim edilmeli veya aldığınız yeni ürünü satıcınız adresinize teslim ederken, satıcınızdan atık elektrikli ve elektronik aletinizi teslim almasını istemelisiniz.
2. Atık ürünün doğru imhası çevre ve insan sağlığı üzerindeki potansiyel olumsuz sonuçların engellenmesine yardımcı olacaktır.
3. Eski ürününüzün imhası hakkında daha fazla bilgi için lütfen belediyeniz ya da ürünü aldığını mağaza ile iletişime geçiniz.
4. AEEE Yönetmeliğine Uygundur.
5. Bu işareti içeren ürünler tehlikeli madde içerebilir. Ürünler içerisindeki tehlikeli maddeler çevre kirlenmesine veya yaralanma/ölüme sebebiyet verebilir. (*www.lg.com/global/recycling*)

SLOVENŠČINA

Odstranjevanje vašega starega aparata

1. Na izdelku prečrtan simbol smetnjaka opozarja, da je treba odpadne električne in elektronske izdelke (OEEI) odstranjevati ločeno od ostalih komunalnih odpadkov.
2. Odpadni električni izdelki lahko vsebujejo nevarne snovi, zato s pravilnim odstranjevanjem starega aparata pripomorete k preprečevanju morebitnih negativnih vplivov na okolje in zdravje ljudi. Vaš stari aparat lahko vsebuje dele, ki bi jih bilo mogoče uporabiti za popravilo drugih izdelkov, in druge dragocene materiale, ki jih je mogoče reciklirati in s tem ohranjati omejene vire.
3. Vaš aparat lahko odnesete bodisi v trgovino, kjer ste kupili ta izdelek, ali pa se obrnite na lokalni urad za odstranjevanje odpadkov glede podrobnosti o najbližjem pooblaščenem zbirnem mestu za OEEI. Za najnovejše informacije za vašo državo si oglejte *www.lg.com/global/recycling*

БЪЛГАРСКИ

Изхвърляне на стария уред

1. Символът със зачертания контейнер показва, че отпадъците от електрическите и електронните продукти (WEEE) трябва да се изхвърлят отделно от битовите отпадъци.
2. Старите електрически продукти могат да съдържат опасни вещества и правилното изхвърляне на Вашия уред ще помогне за предотвратяване на негативните последствия за околната среда и човешкото здраве. Вашият стар уред може да съдържа части за многократна употреба, които биха могли да бъдат използвани за ремонт на други продукти, както и други ценни материали, които могат да бъдат рециклирани с цел запазване на ограничените ресурси.
3. Можете да занесете Вашия уред или в магазина, от който сте го закупили или можете да се свържете с местния държавен офис за отпадъците, за да получите информация за най-близкия РАЗРЕШЕН WEEE пункт за събиране на отпадъци. За най-актуална информация от Вашата държава, моля, погледнете тук: *www.lg.com/global/recycling*

ROMÂNĂ

Eliminarea aparatului vechi

1. Simbolul de pubelă indică faptul că deşeurile electrice şi electronice (WEEE) trebuie eliminate separat de celelalte deşeuri.
2. Produsele electrice şi electronice vechi conţin substanţe periculoase. Astfel, prin eliminarea corespunzătoare veţi contribui la prevenirea deteriorării mediului înconjurător şi al sănătăţii umane. Este posibil ca dispozitivul dvs. vechi să conţină piese componente, care pot fi folosite pentru repararea altor produse sau materiale importante care pot fi reciclate în scopul economisirii resurselor limitate.
3. Dispozitivul vechi poate fi returnat magazinului de unde a fost achiziţionat, sau puteţi contacta firma responsabilă pentru eliminarea deşeurilor, în scopul aflării locaţiei unităţii autorizate pentru reciclarea deşeurilor electrice şi electronice (WEEE). Pentru informaţii mereu actualizate şi referitoare la ţara dvs. vă rugăm vizitaţi pagina web *www.lg.com/global/recycling*

NORSK

Avhending av gamle apparater

1. Dette symbolet av en utkrysset avfallsdunk indikerer at kasserte elektriske og elektroniske produkter (WEEE) skal kastes separat fra husholdningsavfall og leveres til den kommunale resirkulering.
2. Gamle elektriske produkter kan inneholde farlige stoffer, så korrekt avfallshåndtering av det gamle apparatet bidrar til å hindre potensielt negative konsekvenser for miljøet og andres helse. Gamle apparater kan inneholde gjenbrukbare deler som kan brukes til å reparere andre produkter og andre verdifulle materialer som kan resirkuleres for å bevare begrensede ressurser.
3. Du kan bringe apparatet enten til butikken der du kjøpte produktet, eller ta kontakt med den lokale myndighetens avfallskontor for informasjon om nærmeste autoriserte

innsamlingspunkt for el-avfall (WEEE-avfall). For den mest oppdaterte informasjonen for ditt land, gå til *www.lg.com/global/recycling*

SRPSKI

Odlaganje starog aparata

1. Ovaj simbol precrtana kanta za smeće pokazuje da električni i elektronski otpad (WEEE) treba da se odlaže odvojeno od običnog komunalnog otpada.
2. Stari električni aparati mogu da sadrže otrovne supstance, tako da će pravilno odlaganje Vašeg starog aparata pomoći sprečavanju pojave negativnih posledica po životnu sredinu i zdravlje ljudi. Vaš stari aparat može da sadrži delove za višekratnu upotrebu koji se mogu koristiti za zamenu drugih proizvoda i druge vredne materijale koji se mogu reciklirati radi očuvanja ograničenih resursa.
3. Vaš aparat možete da odnesete u radnju gde ste ga kupili ili da kontaktirate lokalnu vladinu kancelariju za otpad kako biste dobili informaciju o najbližoj autorizovanoj WEEE stanici za odlaganje ovog otpada. Za najnovije informacije za Vašu zemlju, molimo Vas da pogledate web stranicu *www.lg.com/global/recycling*

РУССКИЙ

Утилизация старого оборудования

1. Этот перечеркнутый символ мусорной корзины указывает на то, что отработанные электрические и электронные изделий (WEEE) следует утилизировать отдельно от бытовых отходов.
2. Старые электрические изделия могут содержать опасные вещества, поэтому правильная утилизация старого оборудования поможет предотвратить возможные негативные последствия для окружающей среды и здоровья человека. Старое оборудование может содержать детали, которые могут быть повторно использованы для ремонта других изделий, а также другие ценные материалы, которые можно переработать, чтобы сохранить ограниченные ресурсы.
3. Вы можете отнести свой прибор в магазин, где он был приобретен, либо связаться с органами местного самоуправления для получения подробных сведений о ближайшем пункте приема отходов электрического и электронного оборудования (WEEE). Для получения самой свежей информации относительно вашей страны обращайтесь по адресу: *www.lg.com/global/recycling*

Only India

Disposal of your old appliance (as per e-waste Rules)

1. When this crossed out wheeled bin symbol is depicted on the product and its operator's manual, it means the product is covered by the e-waste Management and Handling Rules, 2011 and are meant to be recycled, dismantled, refurbished or disposed off.
2. Do's :
   a. The product is required to be handed over only to the authorized recycler for disposal.
   b. Keep the product in isolated area, after it becomes non-functional/unrepairable so as to prevent its accidental breakage.

   Don't :
   a. The product should not be opened by the user himself/herself, but only by authorized service personnel.
   b. The product is not meant for re-sale to any unauthorized agencies/scrap dealer/kabariwalah.
   c. The product is not meant for mixing into household waste stream.
   d. Do not keep any replaced spare part(s) from the product in exposed area.
3. Any disposal through unauthorized agencies/person will attract action under Environment (Protection) Act 1986.
4. This product is complied with the requirement of Hazardous Substances as specified under Rule 13 (1) & (2) of the E-Waste (Management & Handling) Rules, 2011.
5. To locate a nearest collection centre or call for pick-up (limited area only) for disposal of this appliance, please contact Toll Free No. **1800-315-9999 / 1800-180-9999** for details. All collection centre and pick up facilities are done by third parties with **LG Electronics India Pvt. Ltd.** Merely as a facilitator. For more detailed information, please visit : *http://www.lge.com/in*.

पर्यावरणीय जानकारी

अपने पुराने निपटान के उपकरण (ई-अपशिष्ट नियम के अनुसार)

1. .जब इस काटे गए पहिये वाले बिन का चिन्ह किसी उपकरण और इसके ओपेरटर की पुस्तिका के साथ संलग्न होता है तो इसका मतलब है कि इसे "ई-अपशिष्ट "(प्रबंधन और हथालन) नियम २०११ के अंतर्गत सम्मिलित किया गया है , और इसे नवीनीकरणकरन ,विघटन और निपटान के लिए बनाया गया है ।

2. करें :
क . उपकरण को सिर्फ अधिकृत पुनः नवीनीकरणकर्ता को ही निपतारण करने हेतु हस्तांतरित करें ।
ख. जब उपकरण कार्यरत न हो इसे अलग क्षेत्र में रखें ताकि उपकरण से होने वाली दुर्घटनाओ से बचा जा सके ।

न करें :
क. इस उपकरण को स्वयं/खुद नहीं खोलना चाहिए ! उपकरण को केवल अधिकृत अधिकारी के द्वारा ही खोला जाना चाहिए ।
ख. इस उपकरण को पुनः बिक्री के लिए किसी भी कबाड़ीवाला / भंगार-वाला / अनाधिकृत संस्था को न दें ।
ग. इस उपकरण को किसी घरेलू अपशिष्ट सामान के साथ मिलाकर न रखें ।
घ. उपकरण के बदले हुए या आतंरिक पुरजो को खुले क्षेत्र में न रखें ।

3. यदि किसी अनाधिकृत विभाग या व्यक्ति के द्वारा निपटारन किया जाता है तो यह पर्यावरण (सुरक्षा) धारा १९८६ के अंतर्गत आता है ।

4. यह उत्पाद ई-अपशिष्ट (प्रबंधन और हथालन) नियम 2011 के अन्तर्गत 13(1) एवं (2) के तहत निर्दिष्ट खतरनाक पदार्थो की आवश्यकता का पालन करता है

5. उपरोक्त पदार्थो के निपटारन के लिए नजदीकी निपटारन संसथान (संकीर्ण क्षेत्र)में कॉल करें। अधिक जानकारी के लिए हमारे टोल फ्री नंबर **1800–315–9999 / 1800–180–9999** पर कॉल करें. सभी संग्रहण केंद्र व पिक-अप की सुविधाएं किसी थर्ड- पार्टी जो **LG Electronics India Pvt. Ltd.** को अपनी सेवाएं प्रदान कर रही हों, से करवाएं ।
ज्यादा जानकारी के लिए देखें वेब:साईट : http://www.lge.com/in

BATTERY

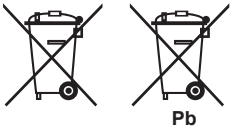

ENGLISH

1. This symbol may be combined with chemical symbols for mercury(Hg), cadmium(Cd) or lead(Pb) if the battery Contains more that 0.0005% of mercury, 0.002% of cadmium or 0.004% of lead.
2. All batteries/accumulators should be disposed separately from the municipal waste stream via designated collection facilities appointed by the government or the local authorities.
3. The correct disposal of Your old batteries/accumulators will help to prevent potential negative consequences for the environment, animal and human health.
4. For more detailed information about disposal of Your old batteries/accumulators, please contact Your city office, waste disposal service or the shop where You purchased the product. (*http://www.lg.com/global/sustainability/environment/take-back-recycling/global-network-europe*)

FRANÇAIS

1. Ce symbole peut être associé au symbole chimique du mercure (Hg), du cadmium (Cd) ou du plomb (Pb) si la batterie contient plus de 0,0005% de mercure, 0,002% de cadmium ou 0,004% de plomb.
2. Toutes les piles et batteries doivent être collectées séparément et emportées par les services de voierie municipaux vers des intallations spécifiques de collecte des déchets, identifiées en conséquence par le gouvernement ou par les autorités locales.
3. Le traitement correct de vos piles ou batteries usagées contribue à protéger l'environnement et la santé des personnes et des animaux.
4. Pour plus d'informations sur le traitement de vos piles ou batteries usagées, merci de bien vouloir vous adresser à votre mairie, au service de la voierie ou au magasin où vous avez acheté le produit. (*http://www.lg.com/global/sustainability/environment/take-back-recycling/global-network-europe*)

ITALIANO

1. Questo simbolo può essere combinato con i simboli di mercurio (Hg), cadmio (Cd) o piombo (Pb) se la batteria contiene più di 0,0005% di mercurio, 0,002% di cadmio 0,004% di piombo.
2. Tutte le batterie/accumulatori devono essere smaltiti separatamente dai rifiuti domestici e nei punti di raccolta designati dal governo o dalle autorità locali.
3. Il corretto smaltimento delle vecchie batterie/accumulatori consente di evitare conseguenze potenziali negative per l'ambiente e la salute umana.
4. Per informazioni più dettagliate relative allo smaltimento di vecchie batterie/accumulatori rivolgersi alla propria azienda di servizi ambientali o al servizio di smaltimento del negozio in cui avete acquistato il prodotto. (*http://www.lg.com/global/sustainability/environment/take-back-recycling/global-network-europe*)

SVENSKA

1. Denna symbol kan kombineras med de kemiska symbolerna för kvicksilver(Hg), kadmium(Cd) eller bly (Pb) om batteriet innehåller mer än, 0,0005% kvicksilver, 0,002% kadmium eller 0,004% bly.
2. Alla batterier/ackumulatorer skall hanteras åtskiljda från vanligt hushållsavfall och föras till för ändamålet avsedda uppsamlingsplatser utsedda av myndigheterna.
3. Rätt hantering av dina gamla batterier/ackumulatorer medverkar till att förhindra negativa konsekvenser för miljön, och för djurs och människors hälsa.
4. För mer detaljerad information om hanteringen av dina gamla batterier/ackumulatorer ber vi dig ta kontakt med myndigheterna där du bor, eller med affären där du köpt din apparat. (*http://www.lg.com/global/sustainability/environment/take-back-recycling/global-network-europe*)

NEDERLANDS

1. Dit symbool kan samen met de chemische symbolen voor kwik (Hg), cadmium (Cd) en lood (Pb) worden gebruikt als de batterij of de accu meer dan 0,0005% kwik, 0,002% cadmium of 0,004% lood bevat.
2. Batterijen en accu's moeten altijd gescheiden van het normale huisvuil worden afgevoerd via door de overheid aangewezen inzamelpunten.
3. Door lege batterijen en accu's op de juiste manier af te voeren, helpt u mogelijke negatieve gevolgen voor het milieu en de gezondheid van mens en dier te voorkomen.
4. Bel voor meer informatie over het afvoeren van lege batterijen en accu's de afdeling Milieudienst van het gemeentehuis van uw woonplaats, het dichtstbijzijnde erkende inleveradres of de winkel waar u het product hebt gekocht. (*http://www.lg.com/global/sustainability/environment/take-back-recycling/global-network-europe*)

SUOMI

1. Mikäli paristo tai akku sisältää yli 0,0005% elohopeaa, 0,002% kadmiumia tai yli 0,004% lyijyä, voi tämä symboli sisältää näiden kemiallisten aineiden lyhenteet kuten elohopea (Hg), kadmium (Cd) tai lyijy (Pb).
2. Kaikki paristot/akut tulisi hävittää erikseen kotitalousjätteestä, ja ne tulisi toimittaa hävitettäväksi valtion tai paikallisten viranomaisten osoittamaan keräyspisteeseen.
3. Käytettyjen paristojen/akkujen oikea hävitystapa auttaa estämään mahdollisia negatiivisia vaikutuksia ympäristölle, eläin- ja ihmisterveydelle.
4. Käytettyjen paristojen/akkujen hävityksestä saat lisätietoja ottamalla yhteyttä paikallisiin viranomaisiin, jätteenkäsittely-yhtiöön tai tuotteen hankintapaikkaan. (*http://www.lg.com/global/sustainability/environment/take-back-recycling/global-network-europe*)

DEUTSCH

1. Dieses Symbol kann mit chmeischen Symbolen für Quecksilber (Hg), Kadmium (Cd) oder Blei kombiniert sein, wenn die Batterie mehr als 0,0005 % Quecksilber, 0,002 % Kadmium oder 0,004 % Blei enthält.
2. Alle Batterien/Akkus sollten getrennt vom Hausmüll über die ausgewiesenen Sammelstellen entsorgt werden, die von staatlichen oder regionalen Behörden dazu bestimmt wurden.
3. Die ordnungsgemäße Entsorgung Ihrer alten Batterien/Akkus hilft bei der Vermeidung möglicher negativer Folgen für Mensch, Tier und Umwelt.
4. Beim Wunsch nach ausführlicheren Informationen über die Entsorgung Ihrer alten Batterien/Akkus wenden Sie sich bitte an Ihre Stadt-/ oder Gemeindeverwaltung, die für Sie zuständige Abfallbehörde oder das Geschäft, in dem Sie das Produkt gekauft haben. (*http://www.lg.com/global/sustainability/environment/take-back-recycling/global-network-europe*)

DANSK

1. Symbolet kan være kombineret med de kemiske symboler for kviksølv (Hg), kadmium (Cd) eller bly (Pb), hvis batteriet indeholer mere end 0,0005% kviksølv, 0,002%kadmium eller 0,004% bly.
2. Alle batterier/akkumulatorer bør bortskaffes på separat vis, og ikke som husholdningsaffald, men via specielle opsamlingssteder, der er udpeget af de offentlige eller lokale myndigheder.
3. Når du bortskaffer dine gamle batterier/akkumulatorer på korrekt vis, hjælper du med til at forhindre mulige negative konsekvenser på miljøet samt på dyrs og menneskers sundhed.
4. Ønsker du yderligere oplysninger om bortskaffelse af dine gamle batterier/akkumulatorer, skal du kontakte de offentlige myndigheder, genbrugspladsen eller butikken, hvor du købte produktet. (*http://www.lg.com/global/sustainability/environment/take-back-recycling/global-network-europe*)

ΕΛΛΗΝΙΚΑ

1. Αυτό το σύμβολο ενδέχεται να συνδυάζεται με χημικά σύμβολα για υδράργυρο (Hg), κάδμιο (Cd) ή μόλυβδο (Pb) εάν η μπαταρία περιέχει περισσότερο από 0,0005% υδράργυρο, 0,002% κάδμιο ή 0,004% μόλυβδο.
2. Όλες οι μπαταρίες /συσσωρευτές θα πρέπει να απορρίπτονται χωριστά από τα οικιακά απορρίμματα στις προβλεπόμενες εγκαταστάσεις συλλογής που έχει δημιουργήσει το κράτος ή οι τοπικές αρχές
3. Η σωστή απόρριψη των παλαιών μπαταριών / συσσωρευτών συμβάλλει στην πρόληψη αρνητικών επιπτώσεων για το περιβάλλον, τα ζώα και την υγεία ανθρώπων.
4. Για αναλυτικότερες πληροφορίες σχετικά με την απόρριψη των παλιών μπαταριών / συσσωρευτών, επικοινωνήστε με το δημαρχείο σας, την υπηρεσία αποκομιδής απορριμμάτων ή το κατάστημα όπου αγοράσατε το προϊόν. (*http://www.lg.com/global/sustainability/environment/take-back-recycling/global-network-europe*)

ESPAÑOL

1. Este símbolo puede aparecer junto con símbolos químicos de mercurio (Hg), cadmio (Cd) o plomo (Pb) si la batería contiene más de un 0,0005% de mercurio, un 0,002% de cadmio o un 0,004% de plomo.
2. Las baterías o acumuladores no deberán tirarse junto con la basura convencional, sino a través de los puntos de recogida designados por el gobierno o las autoridades locales.
3. La correcta recogida y tratamiento de las baterías o acumuladores antiguos contribuye a evitar las potenciales consecuencias negativas para el medio ambiente, los animales y la salud pública.
4. Para más información sobre la eliminación de baterías o acumuladores antiguos, póngase en contacto con su ayuntamiento, el servicio de recogida de basuras o el comercio en el que adquirió el producto. (*http://www.lg.com/global/sustainability/environment/take-back-recycling/global-network-europe*)

PORTUGUÊS

1. Este símbolo pode ser combinado com símbolos químicos para mercúrio (Hg), cádmio (Cd) ou

chumbo (Pb) se a bateria contiver mais de 0,0005% de mercúrio, 0,002% de cádmio ou 0,004% de chumbo.
2. Todos as baterias/acumuladores devem ser eliminados em separado do lixo municipal através dos serviços de recolha designados pelas autoridades locais ou nacionais.
3. A eliminação correcta das baterias/acumuladores usadas ajuda a prevenir consequências negativas potenciais para o ambiente e para a saúde humana e animal.
4. Para informações mais detalhadas sobre a eliminação das suas baterias/acumuladores, contacte por favor os serviços de reciclagem locais, ou o local onde adquiriu o produto. (*http://www.lg.com/global/sustainability/environment/take-back-recycling/global-network-europe*)

SLOVENČINA

1. Tento symbol môže byť kombinovaný s chemickými symbolmi pre ortuť (Hg), kadmium (Cd) alebo olovo (Pb) v prípade, ak batéria obsahuje viac ako 0,0005 % ortuti, 0,002 % kadmia alebo 0,004 % olova.
2. Všetky batérie/akumulátory by sa mali likvidovať oddelene od komunálneho odpadu prostredníctvom určených zberných zariadení ustanovených štátnymi alebo miestnymi úradmi.
3. Správna likvidácia vašich starých batérií/akumulátorov pomôže zabrániť negatívnym následkom na životné prostredie, zdravotný stav ľudí a zvierat.
4. Viac informácií o likvidácii vašich starých batérií/akumulátorov vám poskytne váš mestský úrad, firma na likvidáciu odpadu alebo obchod, kde ste si výrobok kúpili. (*http://www.lg.com/global/sustainability/environment/take-back-recycling/global-network-europe*)

ČESKY

1. Tento symbol může být kombinován s chemickou značkou rtuti (Hg), kadmia (Cd) nebo olova (Pb), pokud baterie obsahuje více než 0,0005 % rtuti, 0,002 % kadmia nebo 0,004 % olova.
2. Všechny baterie/akumulátory je nutno likvidovat odděleně od běžného domovního odpadu, využijte k tomu určená sběrná místa dle pokynů národních nebo místních úřadů.
3. Správná likvidace starých baterií/akumulátorů pomůže zabránit možným negativním dopadům na životní prostředí a zdraví lidí a zvířat.
4. Podrobnější informace o likvidaci starých baterií/akumulátorů vám sdělí váš místní úřad, zpracovatel odpadu nebo obchod, kde jste produkt zakoupili. (*http://www.lg.com/global/sustainability/environment/take-back-recycling/global-network-europe*)

HRVATSKI

1. Taj simbol može se pojaviti u kombinaciji s kemijskim simbolom za živu (Hg), kadmij (Cd) ili olovo (Pb) ako baterija sadrži više od 0,0005% žive, 0,002% kadmija ili 0,004% olova.
2. Sve baterije/akumulatore treba odvojiti od kućanskog otpada i odložiti ih na mjesto koje je za otpad odredila vlada ili lokalna uprava.
3. Ispravnim odlaganjem starih baterija/akumulatora sprječavate negativan utjecaj na okoliš, zdravlje životinja i ljudi.
4. Dodatne informacije o odlaganju starih baterija/akumulatora zatražite od gradske uprave, komunalne službe ili trgovine u kojoj ste kupili proizvod. (*http://www.lg.com/global/sustainability/environment/take-back-recycling/global-network-europe*)

MAGYAR

1. Ez a szimbólum a higany (Hg), a kadmium (Cd), illetve az ólom (Pb) vegyjelével is lehet kombinálva, ha az adott elem 0,0005%-nál több higanyt, 0,002%-nál több kadmiumot, illetve 0,004%-nál több ólmot tartalmaz.
2. Minden elemet/akkumulátort a háztartási hulladéktól elkülönítve kell kezelni, a kormány, illetve a helyi hatóságok által kijelölt gyűjtőlétesítményeken.
3. A régi elemek/akkumulátorok megfelelő hulladékkezelése segít megelőzni a környezetre, illetve állatok és emberek egészségére gyakorolt lehetséges negatív következményeket.
4. A régi elemek/akkumulátorok hulladékkezelésével kapcsolatos részletes tájékoztatásért forduljon az önkormányzat irodájához, a hulladékkezelő szolgálathoz, illetve ahhoz az üzlethez, ahol a terméket vásárolta. (*http://www.lg.com/global/sustainability/environment/take-back-recycling/global-network-europe*)

POLSKI

1. Symbol ten może znajdować się w obecności chemicznych oznaczeń rtęci (Hg), kadmu (Cd) lub ołowiu (Pb), jeżeli bateria zawiera ponad 0,0005% rtęci, 0,002% kadmu lub 0,004% ołowiu.
2. Wszystkie baterie/akumulatory powinny być utylizowane w oddzieleniu od innych odpadów komunalnych przez jednostki wyznaczone do tego celu przez władze rządowe lub lokalne.
3. Poprawna utylizacja zużytych baterii/akumulatorów pomoże zapobiec możliwym negatywnym wpływom na środowisko, zwierzęta i ludzkie zdrowie.
4. W celu uzyskania więcej informacji na temat utylizacji zużytych baterii/akumulatorów należy skontaktować się z lokalnym urzędem miasta, zakładem usług komunalnych lub sklepem, w którym produkt został zakupiony. (*http://www.lg.com/global/sustainability/environment/take-back-recycling/global-network-europe*)

EESTI

1. Seda sümbolit võbeda (Hg), kaadmiumi (Cd) või plii (Pb) keemiline tähis, kui patarei/aku sisaldab üle 0,0005% elavhõbedat, üle 0,002% kaadmiumi või üle 0,004% pliid.
2. Kõigi patareide/akude käitlemine peab toimuma olmeprügiveost eraldi, riiklikult või kohaliku omavalitsuse poolt määratud spetsiaalsete kogumispunktide kaudu.
3. Teie vanade patareide/akude nõuetekohane käitlemine aitab ära hoida võimalikke negatiivseid tagajärgi keskkonnale ja inimeste tervisele.
4. Täpsema teabe saamiseks oma vanade patareide/akude käitlemise kohta põõrduge palun kohaliku omavalitsuse/jäätmekäitlusettevõtte poole või kauplusse, kust te antud toote ostsite. (*http://www.lg.com/global/sustainability/environment/take-back-recycling/global-network-europe*)

LATVIEŠU

1. Šo simbolu var papildināt dzīvsudraba (Hg), kadmija (Cd) vai svina (Pb) ķīmisko elementu simboli, ja akumulators satur vairāk kā 0,0005% dzīvsudraba, 0,002% kadmija vai 0,004% svina.
2. Visas baterijas/akumulatori ir jālikvidē valsts vai pašvaldības nozīmētās speciālās atkritumu savākšanas vietās, atsevišķi no mājsaimniecības atkritumiem.
3. Pareizi atbrīvojoties no vecajām baterijām/akumulatoriem, tiks novērstas iespējami nelabvēlīgās sekas uz apkārtējo vidi un cilvēku veselību.
4. Lai saņemtu sīkāku informāciju par atbrīvošanos no vecajām baterijām/akumulatoriem, lūdzu, sazinieties ar savas pašvaldības biroju, atkritumu iznīcināšanas dienestu vai veikalu, kur nopirkāt šo izstrādājumu. (*http://www.lg.com/global/sustainability/environment/take-back-recycling/global-network-europe*)

LIETUVIŲ K.

1. Jeigu maitinimo elemente yra daugiau nei 0,0005 % gyvsidabrio, kadmio (Cd) arba 0,004 % švino, šis ženklas gali būti naudojamas kartu su cheminiais gyvsidabrio (Hg), 0,002% kadmio arba švino (Pb) ženklais.
2. Visi maitinimo elementai/akumuliatoriaus turi būti išmetami atskirai, ne su buitinėmis atliekomis; juos reikia atiduoti į tam skirtus surinkimo punktus, kuriuos įrengia vyriausybė arba vietos valdžios institucijos.
3. Tinkamai išmetę senus maitinimo elementus/akumuliatorius, padėsite apsaugoti aplinką, gyvūnų ir žmonių sveikatą nuo galimų neigiamų padarinių.
4. Išsamesnės informacijos apie senų maitinimo elementų/akumuliatorių išmetimą teiraukitės savo miesto savivaldybės administracijoje, atliekų tvarkymo tarnyboje arba parduotuvėje, kurioje įsigijote šį gaminį. (*http://www.lg.com/global/sustainability/environment/take-back-recycling/global-network-europe*)

TÜRKÇE

1. Bu sembol pillerin %0,0005 oranında civa, %0,002 oranında kadmiyum veya %0,004 oranında kurşun içermesi durumunda cıva (Hg), kadmiyum (Cd) veya kurşun (Pb) kimyasal sembolleri ile bir arada bulunabilir.
2. Tüm piller ve akümülatörler, normal atılan çöplerden ayrı olarak, hükümet veya yerel idareler tarafından belirlenmiş olan toplama merkezlerinde atılmalıdır.
3. Bu tip kullanılmış pillerin/akümülatörlerin doğru olarak atılması hem çevreye hem de hayvan ve insan sağlığına verilebilecek potansiyel olumsuz sonuçları önleyecektir.
4. Kullanılmış pillerinizin/akümülatörlerinizin atılması ile ilgili olarak, bulunduğunuz yerdeki belediye, çöp atım hizmeti veren kuruluşlara veya ürünü satın aldığınız yerlere başvurabilirsiniz. (*http://www.lg.com/global/sustainability/environment/take-back-recycling/global-network-europe*)

SLOVENŠČINA

1. Simbolu so lahko dodane tudi kemične oznake za živo srebro (Hg), kadmij (Cd) ali svinec (Pb), če baterija vsebuje več kot 0,0005 % živega srebra, 0,002 % kadmija ali 0,004 % svinca.
2. Vse baterije/akumulatorje odstranjujte ločeno od običajnih komunalnih odpadkov na namenskih zbirnih mestih, ki jih določijo vlada ali krajevne oblasti.
3. S pravilnim odlaganjem starih baterij/akumulatorjev pomagate preprečevati negativne posledice za okolje ter zdravje ljudi in živali.
4. Podrobnejše informacije o odstranjevanju starih baterij/akumulatorjev poiščite pri mestnem uradu, komunalni službi ali prodajalni, kjer ste izdelke kupili. (*http://www.lg.com/global/sustainability/environment/take-back-recycling/global-network-europe*)

БЪЛГАРСКИ

1. Ако батерията съдържа над 0,0005% живак, 0,002% кадмий или 0,004% олово, този символ може да е придружен от химически знак, обозначаващи живак (Hg), кадмий (Cd) или олово (Pb).
2. Всички батерии/акумулатори трябва да бъдат изхвърляни отделно от битовите отпадъци чрез определени за това от правителството и местните власти съоръжения.

3. Правилното изхвърляне на непотребните батерии/акумулатори ще помогне за предотвратяване на възможни негативни последици за околната среда, животните и човешкото здраве.
4. За по-подробна информация за изхвърлянето на непотребни батерии/акумулатори се обърнете към местната община, услугите по изхвърляне на отпадъци или магазина, откъдето сте закупили продукта. (*http://www.lg.com/global/sustainability/environment/take-back-recycling/global-network-europe*)

ROMÂNĂ

1. Acest simbol poate fi asociat cu simboluri de elemente chimice pentru mercur(Hg), cadmiu(Cd) sau plumb(Pb) dacă bateria conţine o cantitate mai mare de 0,0005% de mercur, 0,002% de cadmiu sau 0,004% de plumb.
2. Toate bateriile/acumulatoarele trebuie eliminate separat de deşeurile menajere municipale prin unităţi de colectare dedicate, desemnate de guvern sau de autorităţile locale.
3. Eliminarea corectă a vechilor dvs. baterii/acumulatoare va ajuta la prevenirea potenţialelor consecinţe negative asupra mediului înconjurător şi sănătăţii oamenilor.
4. Pentru informaţii mai detaliate despre eliminarea vechilor dvs. baterii/acumulatoare, contactaţi biroul local, serviciul de eliminare a deşeurilor sau magazinul de la care aţi achiziţionat produsul. (*http://www.lg.com/global/sustainability/environment/take-back-recycling/global-network-europe*)

NORSK

1. Dette symbolet kan være kombinert med de kjemiske tegnene for kvikksølv (Hg), kadmium (Cd) eller bly (Pb) hvis batteriene inneholder mer enn 0,0005 % kvikksølv, 0,002 % kadmium eller 0,004 % bly.
2. Alle batterier/akkumulatorer skal kastes atskilt fra restavfall og leveres ved offentlige spesialavfallsstasjoner.
3. Riktig håndtering av brukte batterier/akkumulatorer som avfall bidrar til å forhindre skader på miljøet og dyrs og menneskers helse.
4. Hvis du vil ha mer informasjon om hvordan du bør håndtere brukte batterier/akkumulatorer som avfall, kan du ta kontakt med lokale myndigheter, renovasjonstjenesten på stedet eller butikken der du kjøpte produktet. (*http://www.lg.com/global/sustainability/environment/take-back-recycling/global-network-europe*)

SRPSKI

1. Simbol može biti kombinovan sa hemijskim simbolima za živu (Hg), kadmijum (Cd) ili olovo (Pb) ako baterija sadrži više od 0,0005% žive, 0,002% kadmijuma ili 0,004% olova.
2. Sve baterije/akumulatore treba odložiti odvojeno od opšteg gradskog otpada, i to preko namenskih tačaka za prikupljanje, ustanovljenih od strane vlade ili lokalne uprave.
3. Ispravnim odlaganjem starih baterija/akumulatora sprečavate potencijalne negativne efekte na okolinu, zdravlje životinja i ljudi.
4. Dodatne informacije o odlaganju starih baterija/akumulatora zatražite od gradske uprave, komunalnog preduzeća ili prodavnice u kojoj ste kupili proizvod. (*http://www.lg.com/global/sustainability/environment/take-back-recycling/global-network-europe*)

РУССКИЙ

1. Данный символ может быть совмещен со значком химического элемента: ртути(Hg), кадмия(Cd) или свинца(Pb), если батарея содержит более 0,0005% ртути, 0,002% кадмия или 0,004% свинца.
2. Все аккумуляторы и батареи следует утилизировать отдельно от бытового мусора, в специальных местах сбора, назначенных правительственными или местными органами власти.
3. Правильная утилизация старых батарей и аккумуляторов поможет предотвратить потенциально вредное воздействие на окружающую среду и здоровье человека.
4. Для получения более подробных сведений об утилизации батарей и аккумуляторов обратитесь в администрацию города, службу, занимающуюся утилизацией или в магазин, где был приобретен продукт. (*http://www.lg.com/global/sustainability/environment/take-back-recycling/global-network-europe*)

МАКЕДОНСКИ

1. Овој симбол може да биде комбиниран со хемиските симболи за жива(Hg), кадмиум(Cd) или олово(Pb) ако батеријата содржи повеќе од 0,0005% жива, 0,002% кадмиум или 0,004% олово.
2. Сите батерии/акумулатори треба да бидат отстранети одделно од другиот отпад, на посебни места назначени од страна на владата или локалните власти.
3. Правилното отстранување на вашите стари батерии/акумулатори ќе ги спречи потенцијалните негативни последици за околината, животните и здравјето на луѓето.

4. За повеќе информации околу отстранувањето на вашите стари батерии/акумулатори, ве молиме обратете се до локалните власти, службата за отстранување отпад или продавницата од која сте го купиле производот. (*http://www.lg.com/global/sustainability/environment/take-back-recycling/global-network-europe*)

IR codes

This feature is not available for all models.

Code (Hexa)	Function	Note
08	⏻ (POWER)	Remote control Button (Power On/Off)
95	ENERGY SAVING	Remote control Button
B5	APP	Remote control Button
0B	INPUT	Remote control Button
F0	TV/RAD	Remote control Button
10-19	Number buttons 0~9	Remote control Button
53	LIST	Remote control Button
1A	Q.VIEW	Remote control Button
02	+ ◿	Remote control Button
03	◿ −	Remote control Button
7C	SMART	Remote control Button
79	RATIO	Remote control Button
09	MUTE	Remote control Button
00	∧ P / PAGE ▶	Remote control Button
01	P ∨ / PAGE ◀	Remote control Button
AB	GUIDE	Remote control Button
0C	PORTAL	Remote control Button
AA	INFO	Remote control Button
40	∧	Remote control Button
07	<	Remote control Button
41	∨	Remote control Button
06	>	Remote control Button
44	OK	Remote control Button
43	SETTINGS	Remote control Button
28	↩	Remote control Button
5B	EXIT	Remote control Button
72	Red	Remote control Button
71	Green	Remote control Button
63	Yellow	Remote control Button
61	Blue	Remote control Button
20	TEXT	Remote control Button
21	T.OPT	Remote control Button

Code (Hexa)	Function	Note
39	SUBTITLE	Remote control Button
B1	■	Remote control Button
B0	▶	Remote control Button
BA	❚❚	Remote control Button
8F	◀◀	Remote control Button
8E	▶▶	Remote control Button
DC	3D/*	Remote control Button
9F	DATA/*	Remote control Button
91	AD/*	Remote control Button
E8	ALARM/*	Remote control Button

ENGLISH

External control device setup

ENGLISH

RS-232C Setup

- Image shown may differ from your TV.

Connect the RS-232C (serial port) input jack to an external control device (such as a computer or an A/V control system) to control the product's functions externally.

Connect the serial port of the control device to the RS-232C jack on the product back panel.

NOTE

- RS-232C connection cables are not supplied with the product.

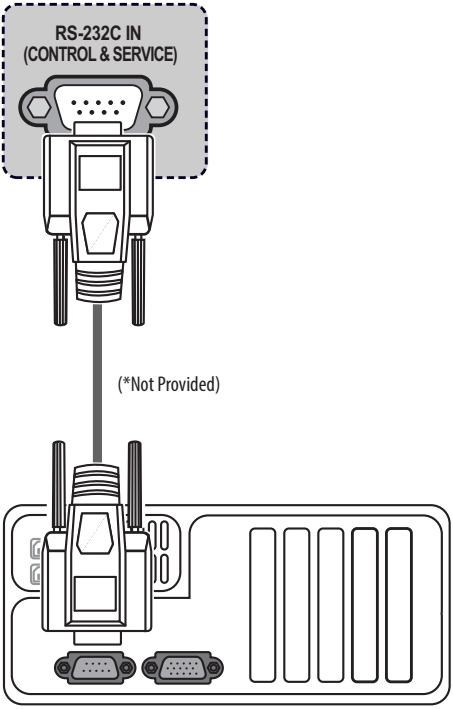

Type of Connector : D-Sub 9-Pin Male

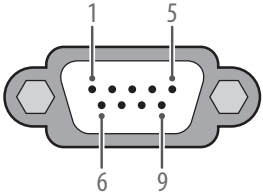

No.	Pin name
1	3.5 V
2	RXD (Receive data)
3	TXD (Transmit data)
4	IR OUT from TV
5	GND
6	No Connection
7	No Connection (5 V available in some model)
8	No Connection
9	No Connection (12 V available in some model)

RS-232C Configurations

7-Wire Configurations
(Standard RS-232C cable)

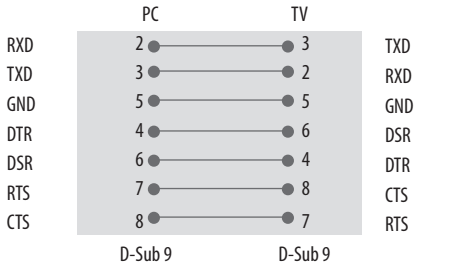

3-Wire Configurations
(Not standard)

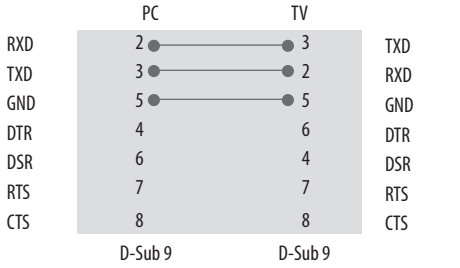

Set ID

Set ID number. "**Real data mapping**".

1 Press **SETTINGS** or **HOME** to access the main menus.

2 Press the Navigation buttons to scroll to **OPTION** and press **OK**.

3 Press the Navigation buttons to scroll to **Set ID** and press **OK**.

4 Scroll left or right to select a set ID number and select **Close**. The adjustment range is 1-99.

5 When you are finished, press **EXIT**.

Communication Parameters

- Baud rate : 9600 bps (UART)
- Data length : 8 bits
- Parity : None
- Stop bit : 1 bit
- Communication code : ASCII code
- Use a crossed (reverse) cable.

Command Reference List

(Depending on Model)

	COMMAND1	COMMAND2	DATA (Hexadecimal)
01. Power	k	a	00 to 01
02. Aspect Ratio	k	c	(See p. 4)
03. Screen Mute	k	d	(See p. 5)
04. Volume Mute	k	e	00 to 01
05. Volume Control	k	f	00 to 64
06. Contrast	k	g	00 to 64
07. Brightness	k	h	00 to 64
08. Colour	k	i	00 to 64
09. Tint	k	j	00 to 64
10. Sharpness	k	k	00 to 32
11. OSD Select	k	l	00 to 01
12. Remote Control Lock Mode	k	m	00 to 01
13. Balance	k	t	00 to 64
14. Colour Temperature	x	u	00 to 64
15. Energy Saving	j	q	(See p. 6)
16. Auto Configuration	j	u	01
17. Equalize	j	v	(See p. 6)
18. Tune Command	m	a	(See p. 7)
19. Programme Add/Skip	m	b	00 to 01
20. Key	m	c	(See p. 7)
21. Control Back Light	m	g	00 to 64
22. Input select (Main)	x	b	(See p. 7)

NOTE

- During USB operations such as DivX or EMF, all commands except Power(ka) and Key(mc) are not executed and treated as NG.

Transmission / Receiving Protocol

(Depending on Model)

Transmission

[Command1][Command2][ ][Set ID][ ][Data][Cr]

[Command 1] : First command to control the TV.(j, k, m or x)

[Command 2] : Second command to control the TV.

[Set ID] : You can adjust the set ID to choose desired monitor ID number in option menu. Adjustment range is 1 to 99. When selecting Set ID '0', every connected set is controlled. Set ID is indicated as decimal (1 to 99) on menu and as Hexa decimal (0x0 to 0x63) on transmission/receiving protocol.

[Data] : To transmit command data.Transmit 'FF' data to read status of command.

[Cr] : Carriage Return
ASCII code '0x0D'

[ ] : ASCII code 'space (0x20)'

OK Acknowledgement

[Command2][ ][Set ID][ ][OK][Data][x]

* The set transmits ACK (acknowledgement) based on this format when receiving normal data. At this time, if the data is data read mode, it indicates present status data. If the data is data write mode, it returns the data of the PC computer.

Error Acknowledgement

[Command2][ ][Set ID][ ][NG][Data][x]

* The set transmits ACK (acknowledgement) based on this format when receiving abnormal data from non-viable functions or communication errors.

Data 00 : Illegal Code

01 Power (Command: k a)

▶ To control Power On/Off of the set.

Transmission[k][a][ ][Set ID][ ][Data][Cr]

Data 00 : Power Off 01 : Power On

Ack [a][ ][Set ID][ ][OK/NG][Data][x]

▶ To Show TV is Power On/Off.

Transmission [k][a][ ][Set ID][ ][FF][Cr]

Ack [a][ ][Set ID][ ][OK/NG][Data][x]

* Similarly, if other functions transmit '0xFF' data based on this format, Acknowledgement data feed back presents status about each function.
* OK Ack., Error Ack. and other message may display on the screen when TV is power On.

02 Aspect Ratio (Command: k c)
(Main Picture Size)

▶ To adjust the screen format. (Main picture format) You can also adjust the screen format using the Aspect Ratio in the Q.MENU. or PICTURE menu.

Transmission [k][c][ ][Set ID][ ][Data][Cr]

Data 01 : Normal screen (4:3) 07 : 14:9
02 : Wide screen (16:9) 09 : Just Scan
04 : Zoom 0B : Full Wide
06 : Original 10 to 1F : Cinema Zoom 1 to 16

Ack [c][ ][Set ID][ ][OK/NG][Data][x]

* Using the PC input, you select either 16:9 or 4:3 screen aspect ratio.
* In DTV/HDMI (1080i 50 Hz / 60 Hz, 720p 50Hz / 60 Hz, 1080p 24 Hz / 30 Hz / 50 Hz / 60 Hz), Component(720p, 1080i, 1080p 50 Hz / 60 Hz) mode, Just Scan is available.
* Full Wide is supported only for Digital.

03 Screen Mute (Command: k d)

▶ To select screen mute on/off.

Transmission [k][d][ ][Set ID][ ][Data][Cr]

Data 00 : Screen mute off (Picture on)
Video mute off
01 : Screen mute on (Picture off)
10 : Video mute on

Ack [d][ ][Set ID][ ][OK/NG][Data][x]

* In case of video mute on only, TV will display On Screen Display(OSD). But, in case of Screen mute on, TV will not display OSD.

04 Volume Mute (Command: k e)

▶ To control volume mute on/off.
You can also adjust mute using the MUTE button on remote control.

Transmission [k][e][ ][Set ID][ ][Data][Cr]

Data 00 : Volume mute on (Volume off)
01 : Volume mute off (Volume on)

Ack [e][ ][Set ID][ ][OK/NG][Data][x]

05 Volume Control (Command: k f)

▶ To adjust volume.
You can also adjust volume with the volume buttons on remote control.

Transmission [k][f][ ][Set ID][ ][Data][Cr]

Data Min : 00 to Max : 64

* Refer to Real data mapping.

Ack [f][ ][Set ID][ ][OK/NG][Data][x]

06 Contrast (Command: k g)

▶ To adjust screen contrast.
You can also adjust contrast in the PICTURE menu.

Transmission [k][g][ ][Set ID][ ][Data][Cr]

Data Min : 00 to Max : 64

* Refer to Real data mapping.

Ack [g][ ][Set ID][ ][OK/NG][Data][x]

07 Brightness (Command: k h)

▶ To adjust screen brightness.
You can also adjust brightness in the PICTURE menu.

Transmission [k][h][ ][Set ID][ ][Data][Cr]

Data Min : 00 to Max : 64

* Refer to Real data mapping.

Ack [h][ ][Set ID][ ][OK/NG][Data][x]

08 Colour (Command: k i)

▶ To adjust the screen Colour.
You can also adjust colour in the PICTURE menu.

Transmission [k][i][ ][Set ID][ ][Data][Cr]

Data Min : 00 to Max : 64

* Refer to Real data mapping.

Ack [i][ ][Set ID][ ][OK/NG][Data][x]

09 Tint (Command: k j)

▶ To adjust the screen tint.
You can also adjust tint in the PICTURE menu.

Transmission [k][j][ ][Set ID][ ][Data][Cr]

Data Red : 00 to Green : 64

* Refer to Real data mapping.

Ack [j][ ][Set ID][ ][OK/NG][Data][x]

10 Sharpness (Command: k k)

▶ To adjust the screen sharpness.
You can also adjust sharpness in the PICTURE menu.

Transmission [k][k][ ][Set ID][ ][Data][Cr]

Data Min : 00 to Max : 32

* Refer to Real data mapping.

Ack [k][ ][Set ID][ ][OK/NG][Data][x]

11 OSD Select (Command: k l)

► To select OSD (On Screen Display) on/off when controlling remotely.

Transmission [k][l][ ][Set ID][ ][Data][Cr]

Data 00 : OSD off 01 : OSD on

Ack [l][ ][Set ID][ ][OK/NG][Data][x]

12 Remote control lock mode (Command: k m)

► To lock the front panel controls on the monitor and remote control.

Transmission [k][m][ ][Set ID][ ][Data][Cr]

Data 00 : Lock off 01 : Lock on

Ack [m][ ][Set ID][ ][OK/NG][Data][x]

* If you are not using the remote control, use this mode. When main power is on/off, external control lock is released.
* In the standby mode, if key lock is on, TV will not turn on by power on key of IR & Local Key.

13 Balance (Command: k t)

► To adjust balance.
You can also adjust balance in the AUDIO menu.

Transmission [k][t][ ][Set ID][ ][Data][Cr]

Data L : 00 to R : 64

* Refer to Real data mapping.

Ack [t][ ][Set ID][ ][OK/NG][Data][x]

14 Colour Temperature (Command: x u)

► To adjust colour temperature. You can also adjust Colour Temperature in the PICTURE menu.

Transmission [x][u][ ][Set ID][ ][Data][Cr]

Data Warm : 00 to Cool : 64

* Refer to Real data mapping.

Ack [u][ ][Set ID][ ][OK/NG][Data][x]

15 Energy Saving (Command: j q)

► To reduce the power consumption of the TV. You can also adjust Energy Saving in PICTURE menu.

Transmission [j][q][ ][Set ID][ ][Data][Cr]

Power Saving Function					Level				Description
7	6	5	4		3	2	1	0	
0	0	0	0	Low Power	0	0	0	0	Off
0	0	0	0	Low Power	0	0	0	1	Minimum
0	0	0	0	Low Power	0	0	1	0	Medium
0	0	0	0	Low Power	0	0	1	1	Maximum
0	0	0	0	Low Power	0	1	0	1	Screen Off
0	0	0	0	Low Power	0	1	0	0	Auto

► 'Auto' is available in TV that supports 'Intelligent Sensor'.

Ack [q][ ][Set ID][ ][OK/NG][Data][x]

16 Auto Configure (Command: j u) (Only RGB support model)

► To adjust picture position and minimize image shaking automatically. It works only in RGB (PC) mode.

Transmission [j][u][ ][Set ID][ ][Data][Cr]

Data 01 : To set

Ack [u][ ][Set ID][ ][OK/NG][Data][x]

17 Equalizer (Command : j v)

► To adjust equalize.

Transmission [j][v][ ][Set ID][ ][Data][Cr]

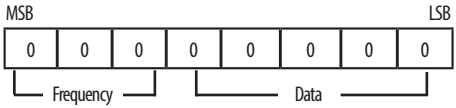

7	6	5	Frequency	4	3	2	1	0	Step
0	0	0	1st Band	0	0	0	0	0	0(decimal)
0	0	1	2nd Band	0	0	0	0	1	1(decimal)
0	1	0	3rd Band	...	...	...	...	...	...
0	1	1	4th Band	1	0	0	1	1	19(decimal)
1	0	0	5th Band	1	0	1	0	0	20(decimal)

Ack [v][ ][Set ID][ ][OK/NG][Data][x]

18 Tune Command (Command: m a)

▶ Select channel to following physical number.

Transmission [m][a][ ][Set ID][ ][Data 00][ ]
[Data 01][ ][Data 02][Cr]

Data 00 : High channel data

Data 01 : Low channel data
ex. No. 47 -> 00 2F (2FH)
No. 394 -> 01 8A (18AH),
DTV No. 0 -> Don't care

Data 02 : [Antena]
0x00 : Analog Main
0x10 : DTV Main
0x20 : Radio

[Cable]
0x80 : Analog Main
0x90 : DTV Main
0xA0 : Radio

[Satellite] (Depending on Model)
0x40 : DTV Main
0x50 : Radio Main

Channel data range
Min: 00 Max: 270F (0 to 9999)

Ack [a][ ][Set ID][ ][OK/NG][Data][x]

Data Min : 00 to Max : 7DH

19 Programme Add/Skip (Command: m b)

▶ To set skip status for the current Programme.

Transmission [m][b][ ][Set ID][ ][Data][Cr]

Data 00 : Skip 01 : Add

Ack [b][ ][Set ID][ ][OK/NG][Data][x]

20 Key (Command: m c)

▶ To send IR remote key code.

Transmission [m][c][ ][Set ID][ ][Data][Cr]

Data IR CODES

Ack [c][ ][Set ID][ ][OK/NG][Data][x]

21 Control Backlight (Command: m g)

▶ To control the backlight.

Transmission [m][g][ ][Set ID][ ][Data][Cr]

Data Min : 00 to Max : 64

Ack [g][ ][Set ID][ ][OK/NG][Data][x]

22 Input select (Command: x b)
(Main Picture Input)

▶ To select input source for main picture.

Transmission [x][b][ ][Set ID][ ][Data][Cr]

Data Structure

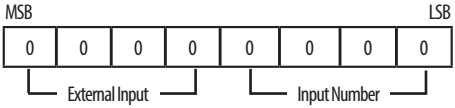

External Input				Data
0	0	0	0	DTV
0	0	0	1	Analogue
0	0	1	0	AV
0	1	0	0	Component
0	1	1	0	RGB
0	1	1	1	HDMI
1	0	0	0	
1	0	0	1	
1	0	1	0	

Input Number				Data
0	0	0	0	Input1
0	0	0	1	Input2
0	0	1	0	Input3
0	0	1	1	Input4

Ack [b][ ][Set ID][ ][OK/NG][Data][x]

* Real data mapping

00 :	Step 0
⋮	
A :	Step 10 (Set ID 10)
⋮	
F :	Step 15 (Set ID 15)
10 :	Step 16 (Set ID 16)
⋮	
64 :	Step 100
⋮	
6E :	Step 110
⋮	
73 :	Step 115
74 :	Step 116
⋮	
CF :	Step 199
⋮	
FE :	Step 254
FF :	Step 255