LG
Life's Good

OWNER'S MANUAL

IPS LED COMPUTER MONITOR (LED COMPUTER MONITOR*)

*Disclaimer: LG LED Monitor applies LCD screen with LED backlights.
This product is a computer monitor and not for television purpose.

Please read the safety information carefully before using the product.

IPS LED Monitor (LED Monitor) Model List

25UM58
29UM58
34UM58

www.lg.com

ENGLISH

CONTENTS

3 LICENSE

4 ASSEMBLING AND PREPARING

4 Product Components
5 Component and Button Description
6 Moving and Lifting the Monitor
7 Installing the Monitor
7 - Assembling the stand base
8 - Using the cable holder
9 - Detaching the stand base
11 - Installing onto a table
12 - Adjusting the angle
13 - Using the Kensington lock
13 - Installing the wall mount plate
14 - Installing to a wall

15 USING THE MONITOR

15 Connecting to a PC
15 - HDMI connection
16 Connecting to External Devices
16 - Connecting Headphones

17 CUSTOMIZING SETTINGS

17 Activating the Main Menu
18 Customizing settings
18 - Menu Settings
18 - -Quick Settings
19 - -Picture
21 - -General
22 - -Reset
23 - -Picture mode

24 TROUBLESHOOTING

26 SPECIFICATIONS

26 25UM58
27 29UM58
28 34UM58
29 Factory support mode
29 HDMI Timing (Video)
29 Power Indicator

30 PROPER POSTURE

30 Proper Posture for Using the Monitor

LICENSE

Each model has different licenses. Visit www.lg.com for more information on the license.

The terms HDMI and HDMI High-Definition Multimedia Interface, and the HDMI Logo are trademarks or registered trademarks of HDMI Licensing Administrator, Inc.

The following content is only applied to the monitor which is sold in Europe market and which needs to meet the ErP Directive:

* This monitor is set to be turned off automatically in 4 hours after you turned on display if there is no adjustment to display.
* To make this setting be disabled, change the option to ‘Off’ in OSD menu of “Automatic Standby”.

ENGLISH

ASSEMBLING AND PREPARING

Product Components

Please check whether all the components are included in the box before using the product. If there are missing components, contact the retail store where you purchased the product. Note that the product and components may look different from those shown here.

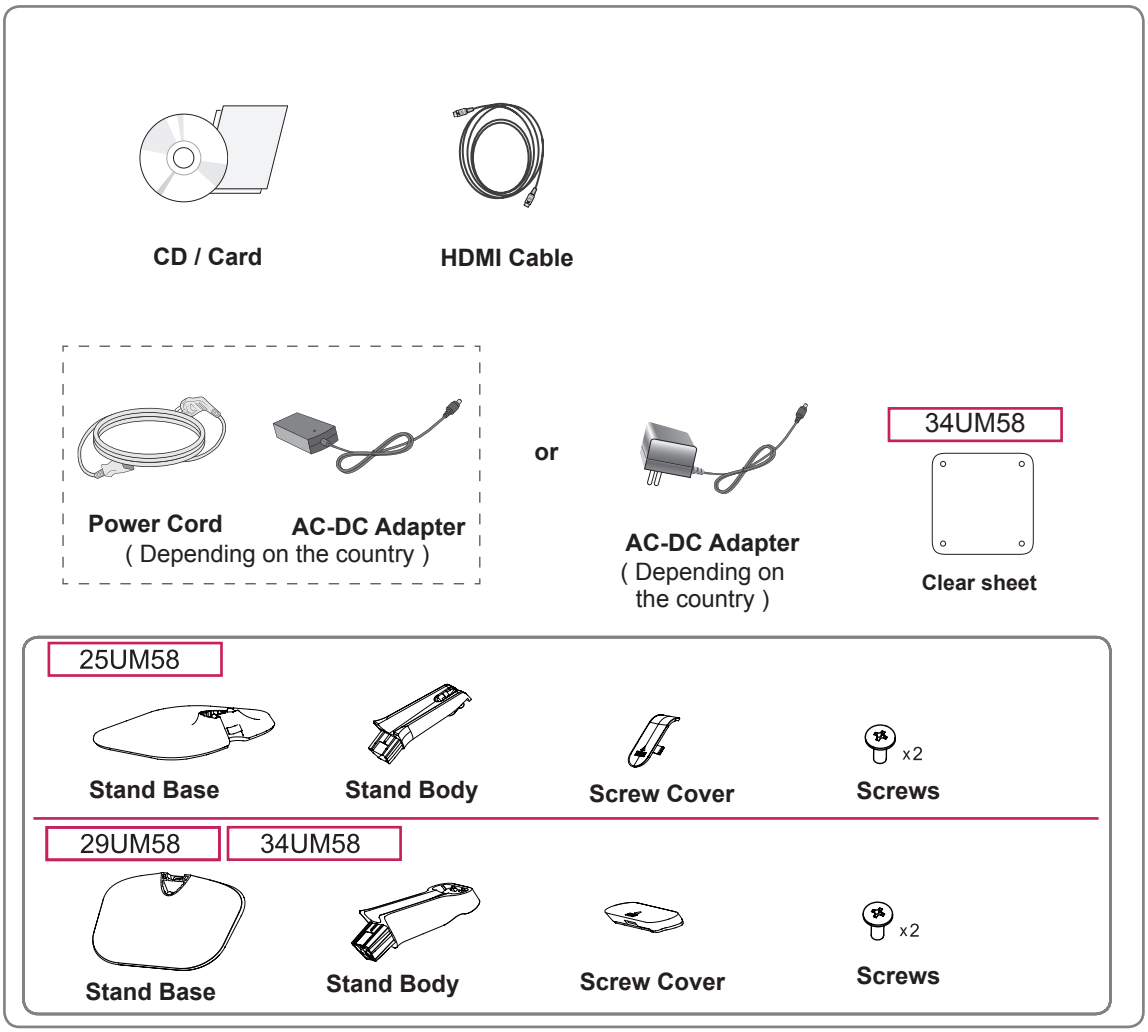

CAUTION

- Always use genuine components to ensure safety and product performance.
- The product warranty will not cover damage or injury caused by the use of counterfeit components.

NOTE

- Note that the components may look different from those shown here.
- Without prior notice, all information and specifications in this manual are subject to change to improve the performance of the product.
- To purchase optional accessories, visit an electronics store or online shopping site or contact the retail store where you purchased the product.

Component and Button Description

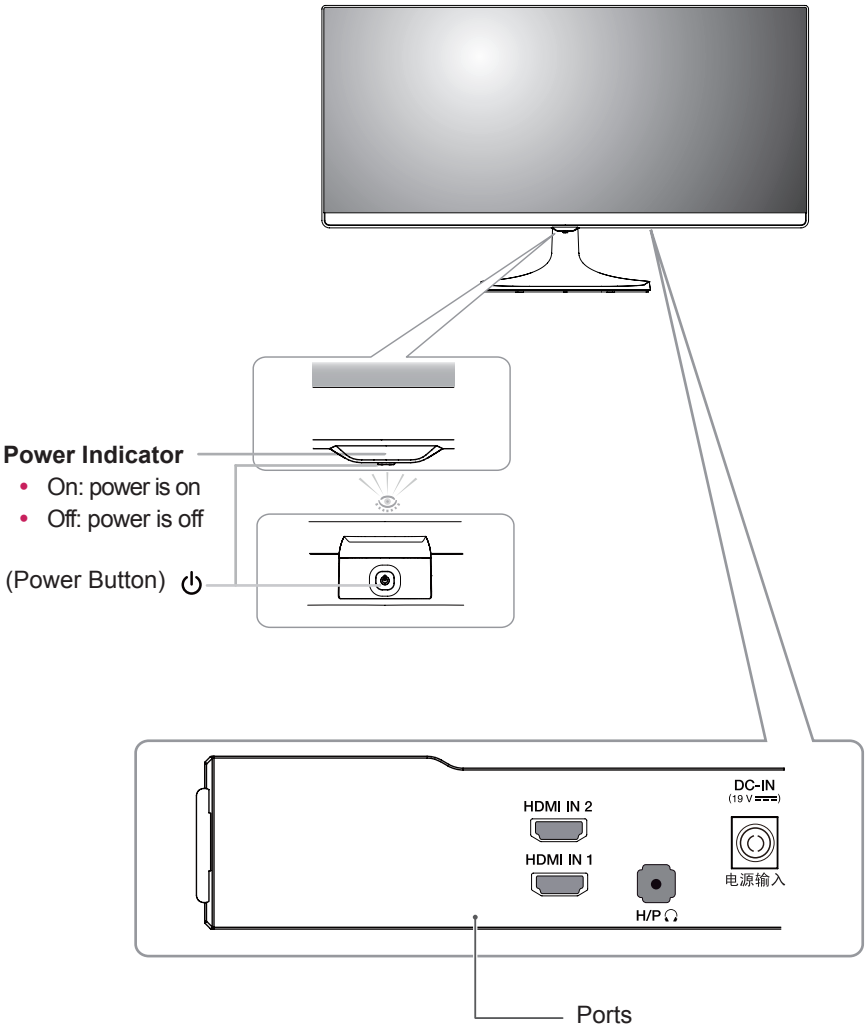

Moving and Lifting the Monitor

When moving or lifting the monitor, follow these instructions to prevent the monitor from being scratched or damaged and to ensure safe transportation regardless of its shape or size.

- It is advisable to place the monitor in the original box or packing material before attempting to move it.
- Before moving or lifting the monitor, disconnect the power cord and all cables.
- Hold the top and bottom of the monitor frame firmly. Do not hold the panel itself.

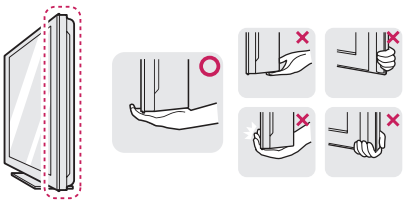

- When holding the monitor, the screen should face away from you to prevent it being scratched.

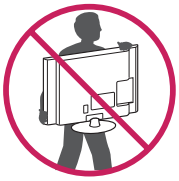

- When moving the monitor, avoid any strong shock or vibrations to the product.
- When moving the monitor, keep it upright, never turn the monitor on its side or tilt it sideways.

CAUTION

- As far as possible, avoid touching the monitor screen. This may result in damage to the screen or some of the pixels used to create images.

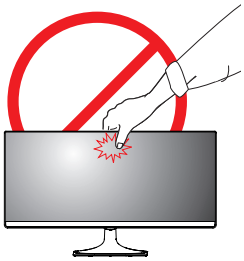

- If you use the monitor panel without the stand base, its joystick button may cause the monitor to become unstable and fall, resulting in damage to the monitor or human injury. In addition, this may cause the joystick button to malfunction.

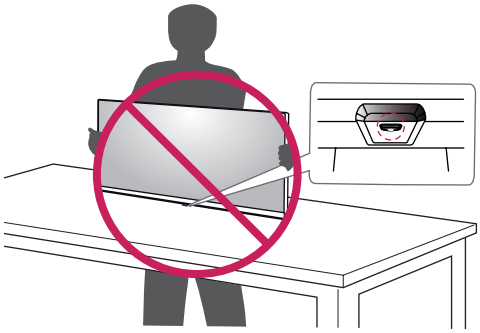

Installing the Monitor

Assembling the stand base

25UM58

1 Place the screen face down.

CAUTION

- To protect the screen from scratches, cover the surface with a soft cloth.

2 Check the direction of the stand body (front, back) and then mount the stand body onto the stand hinge.
Tighten two screws into the back of the stand body .

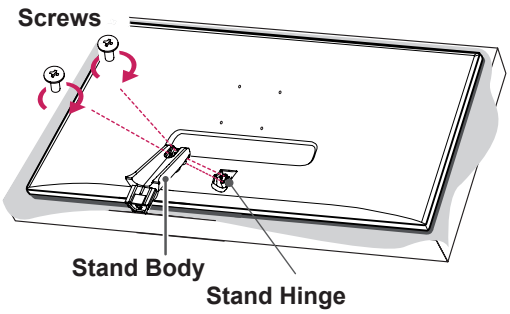

3 1 Attach the **Stand Base** to **Stand Body**.
2 Tighten the screw to the right.

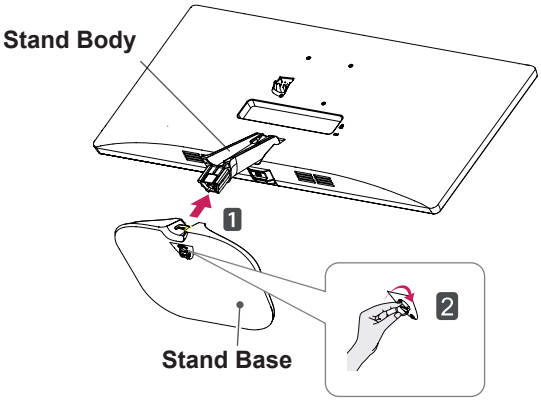

4 Attach the screw cover.

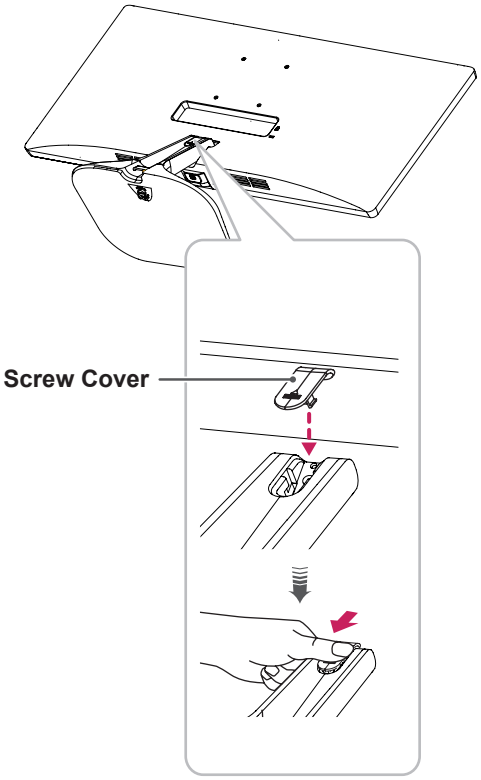

ENGLISH

29UM58 | 34UM58

1 Place the screen face down.

CAUTION

- To protect the screen from scratches, cover the surface with a soft cloth.

2 Check the direction of the stand body (front, back) and then mount the stand body onto the stand hinge.
Tighten two screws into the back of the stand body .

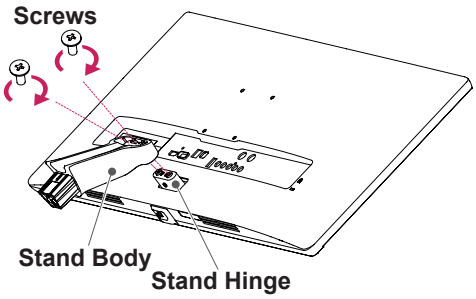

3 1 Attach the **Stand Base** to **Stand Body**.
2 Tighten the screw to the right.

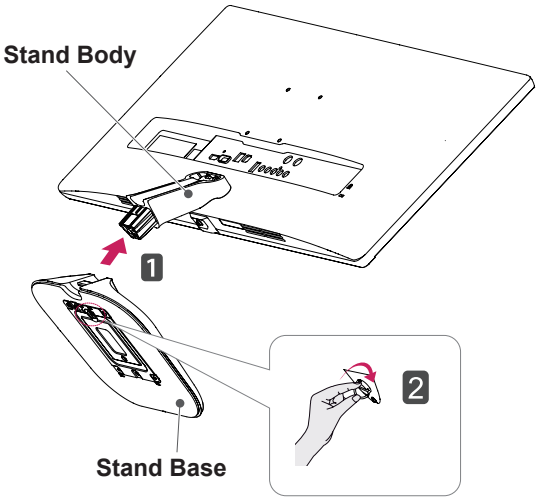

4 Attach the screw cover.

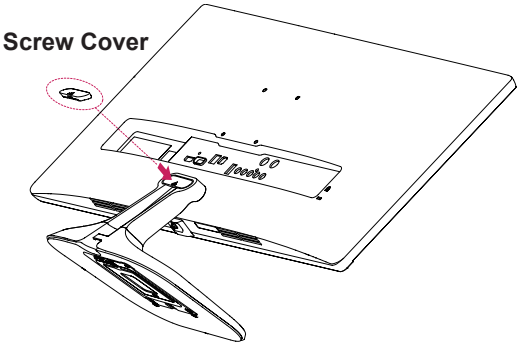

CAUTION

Applying excessive force when tightening the screws may cause damage to the monitor. Damage caused in this way will not be covered by the product warranty.

CAUTION

It may hurt your foot off the stand, so be careful.

Using the cable holder

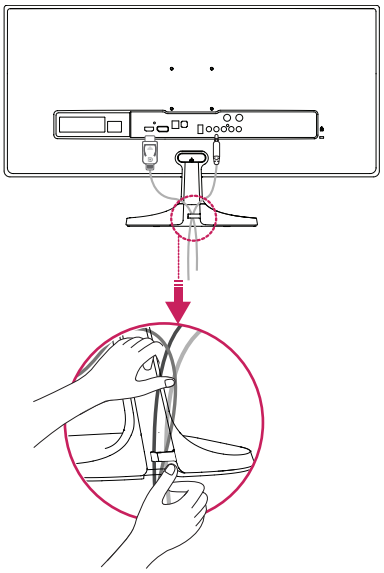

Detaching the stand base

25UM58

1 Place the screen face down.

CAUTION

- To protect the screen from scratches, cover the surface with a soft cloth.

2 Remove the screw cover.

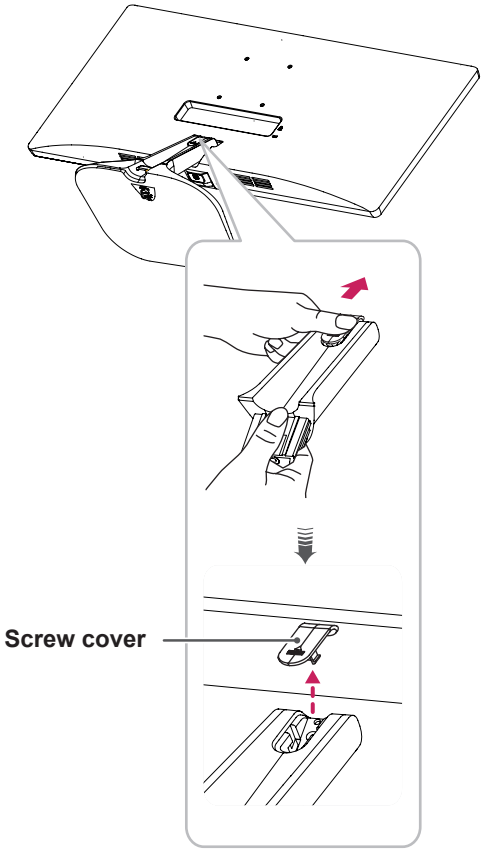

3 Remove the two screws on the back of stand body.

As shown in the illustration, disconnect the **stand body from the stand hinge.**

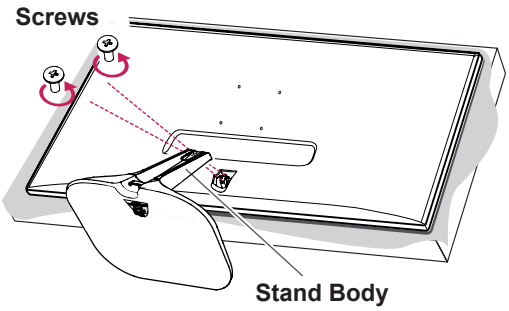

4 1 Turn the screw to the left.
2 Pull out the **Stand Base**.

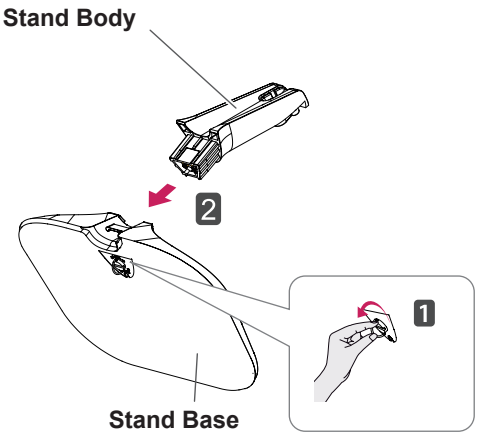

ENGLISH

29UM58 | 34UM58

1 Place the screen face down.

CAUTION

- To protect the screen from scratches, cover the surface with a soft cloth.

2 Remove the screw cover.

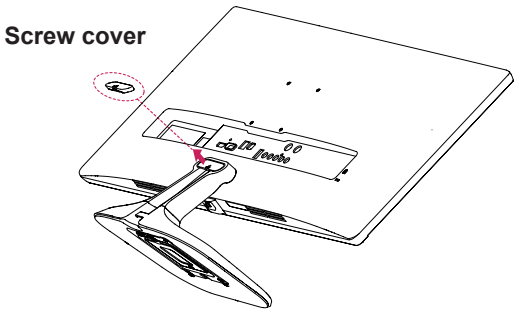

3 Remove the two screws on the back of stand body.

As shown in the illustration, disconnect the **stand body from the stand hinge.**

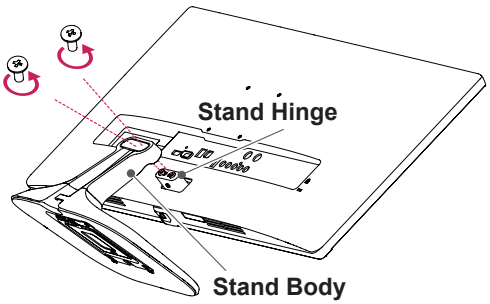

4 1 Turn the screw to the left.
2 Pull out the **Stand Base**.

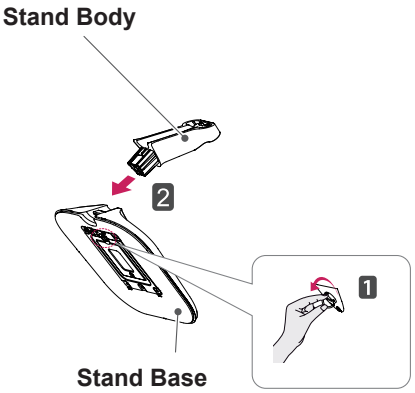

CAUTION

- Illustrations in this document represent typical procedures, so they may look different from the actual product.
- Do not carry the monitor upside down by just holding the stand base. This may cause the monitor to fall off the stand and could result in personal injury.
- When lifting or moving the monitor, do not touch the monitor screen. Applying force or pressure may damage the monitor screen. Instead, hold the stand body or the plastic frame of the product.

CAUTION

- The components in the illustrations may differ from the actual product.
- Do not carry the monitor upside down, as this may cause it to fall off its stand and result in damage or injury.
- To avoid damaging the screen when lifting or moving the monitor, only hold the stand or the plastic cover. This avoids putting unnecessary pressure on the screen.

Installing onto a table

1 Lift the monitor and place it on the table in an upright position.

Place at least **100 mm** away from the wall to ensure sufficient ventilation.

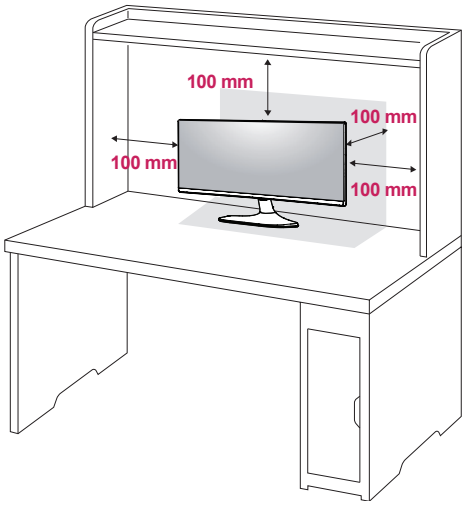

2 Connect the adapter to the monitor, then plug the power cord into the power outlet.

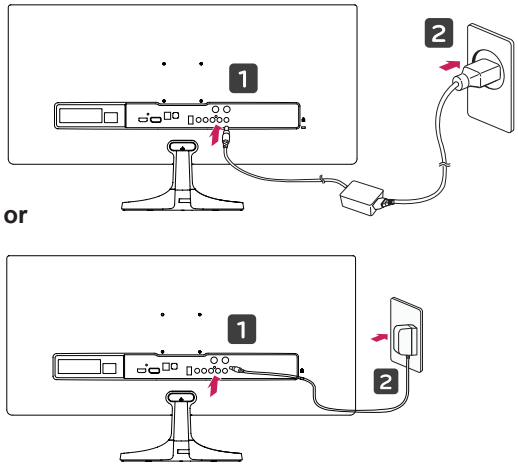

3 Press the ⏻ (Power) button on the bottom of the monitor to turn it on.

CAUTION

- Unplug the power cord prior to moving or installing the monitor. There is risk of electric shock.

Adjusting the angle

1 Place the monitor in an upright position, mounted on the stand base.

2 Adjust the angle of the screen. The angle of the screen can be adjusted forwards or backwards for a comfortable viewing experience.

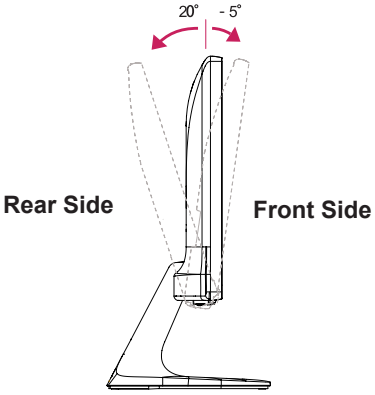

WARNING

- To avoid injury to the fingers when adjusting the screen, do not hold the lower part of the monitor's frame as illustrated below.

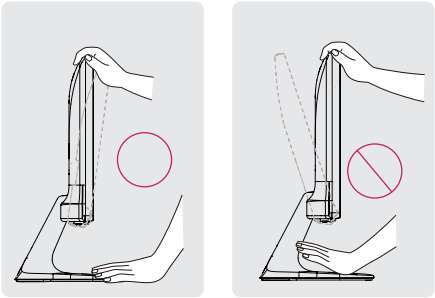

- Be careful not to touch or press the screen area when adjusting the angle of the monitor.

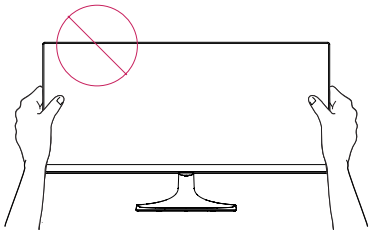

Using the Kensington lock

The Kensington security system connector is located at the back of the Monitor set.
For more information on installation and usage, refer to the Kensington lock user manual or visit the website at http://www.kensington.com.

Connect the Kensington security system cable between the Monitor set and a table.

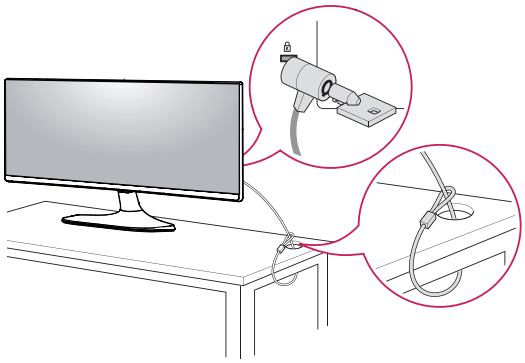

NOTE

- Use of the Kensington lock is optional. The accessories can be purchased at your local electronics store.

Installing the wall mount plate

This monitor supports the specification of the standard wall mount plate or compatible device.

1. Place the screen face down. To protect the screen from scratches, cover the surface with a soft cloth.
2. Attach the clear sheet to the back of the monitor and align it with the screw holes. (34UM58)
3. Place the wall mount plate onto the monitor and align it with the screw holes.
4. Tighten the four screws to fix the plate to the monitor using a screwdriver.

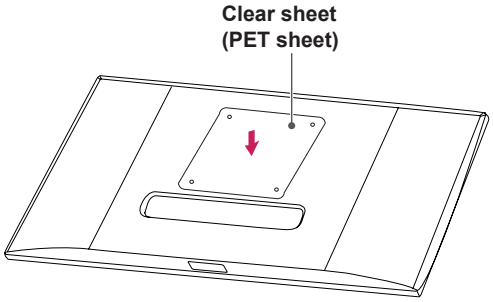

NOTE

- The wall mount plate is sold separately.
- For more information on installation, refer to the wall mount plate's installation guide.
- Be careful not to use excessive force when mounting the wall mount plate, as this can damage the monitor's screen.

ENGLISH

Installing to a wall

Install the monitor at least 100 mm away from the wall and leave about 100 mm of space at each side of the monitor to ensure sufficient ventilation. Detailed installation instructions can be obtained from your local retail store. Please refer to the manual to install and set up a tilting wall mounting bracket.

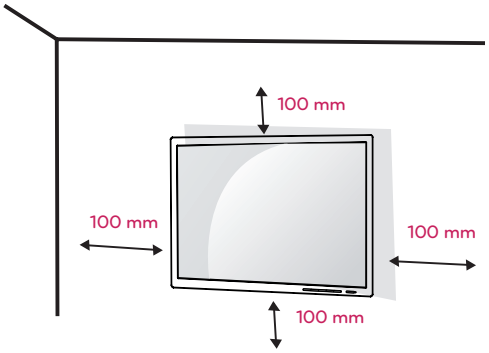

To install the monitor to a wall, attach a wall mounting bracket (optional) to the back of the monitor. Make sure that the wall mounting bracket is securely fixed to the monitor and to the wall.

1 If you use screw longer than standard, the monitor might be damaged internally.
2 If you use improper screw, the product might be damaged and drop from mounted position.
In this case, LG Electronics is not responsible for it.

Wall Mount (A x B)	25UM58 29UM58 75 x 75	34UM58
Stand Screw	M4 x 10 mm	
Required Screws	4	

CAUTION

- Unplug the power cord before moving or installing the monitor to avoid electric shocks.
- Installing the monitor on the ceiling or on a slanted wall may result in the monitor falling off, which could lead to injury. Please use the genuine LG wall mounting bracket. For more information, contact your local retail store or a qualified installer.
- Applying excessive force when fastening screws may cause damage to the monitor. Damage caused in this way will not be covered by the product warranty.
- Use the wall mounting bracket and screws that conform to the VESA standard. Damage caused by the use or misuse of inappropriate components will not be covered by the product warranty.
- Screw length from outer surface of back cover should be under 8mm.

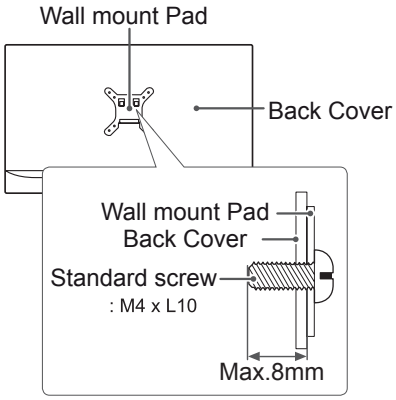

NOTE

- Use the screws specified by the VESA standard.
- The wall mount kit includes the installation guide and all necessary parts.
- The wall mounting bracket is optional. The accessories can be purchased at your local retail store.
- The length of the screw may differ for each wall mounting bracket. Ensure the correct length screw is used.
- For more information, please refer to the user manual for the wall mounting bracket.

USING THE MONITOR

Connecting to a PC

- This monitor supports the *Plug and Play feature.
  *Plug and Play: A feature that allows you to add a device to your computer without having to reconfigure anything or install any manual drivers.

HDMI connection

Transmits the digital video and audio signals from your PC and A/V devices to the monitor. Connect your PC and AV device to the monitor with the HDMI cable as illustrated below.
Press the menu button and then select the input option from the input menu.

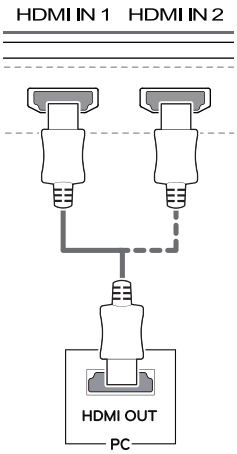

NOTE

- If you use HDMI PC, it can cause compatibility problem.
- Use a certified cable with the HDMI logo attached. If you do not use a certified HDMI cable, the screen may not display or a connection error may occur.
- Recommended HDMI cable types
  - High-Speed HDMI®/™ Cable
  - High-Speed HDMI®/™ Cable with Ethernet

ENGLISH

Connecting to External Devices

Connecting Headphones

Connect peripherals to the monitor via the headphones port. Connect as illustrated.

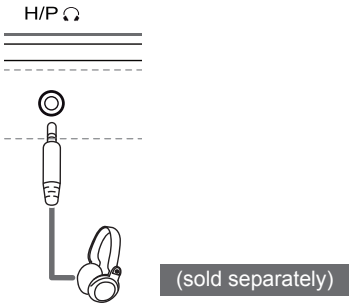

NOTE

- Peripheral devices are sold separately.
- If you use angled earphones, it may cause a problem with connecting another external device to the monitor. Therefore, it is recommended to use straight earphones.

Angled

Straight

- Depending on the audio settings of the PC and external device, headphones and speaker functions may be limited.

CUSTOMIZING SETTINGS

Activating the Main Menu

1 Press the joystick button on the bottom of the monitor.
2 Move the joystick up/down (▲/▼) and left/right(◀/▶) to set the options.
3 Press the joystick button once more to exit the main menu.

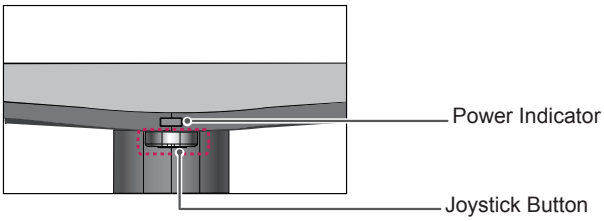

Button	Menu Status		Description
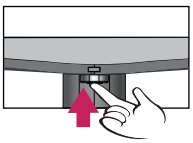	**Main menu disabled**		Enables the main menu.
	Main menu enabled		Exits the main menu. (Holding down the button to turn off the monitor: You can turn off the monitor this way at any time, including when the OSD is on.)
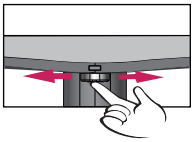	◀	**Main menu disabled**	Adjusts the monitor volume level.
		Main menu enabled	Enters the menu features.
	▶	**Main menu disabled**	Adjusts the monitor volume level.
		Main menu enabled	Operates the Input change.
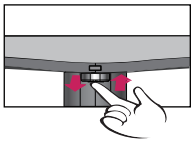	▲	**Main menu disabled**	Enables the main menu.
		Main menu enabled	Enters the picture mode feature.
	▼	**Main menu disabled**	Enables the main menu.
		Main menu enabled	Turns off the monitor.

Main Menu Features

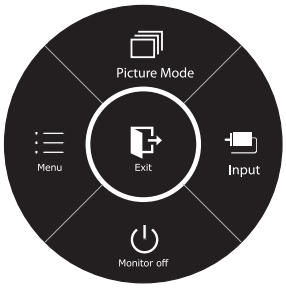

Long press: Monitor off

Main Menu	Description
Menu	Configures the screen settings.
Picture Mode	Select picture mode to achieve the best display effect.
Input	You can choose the input signal. • When two input signals are connected, you can select the input signal you want.
Monitor off	Turns off the monitor.
Exit	Exits the main menu.

ENGLISH

Customizing settings

Menu Settings

-Quick Settings

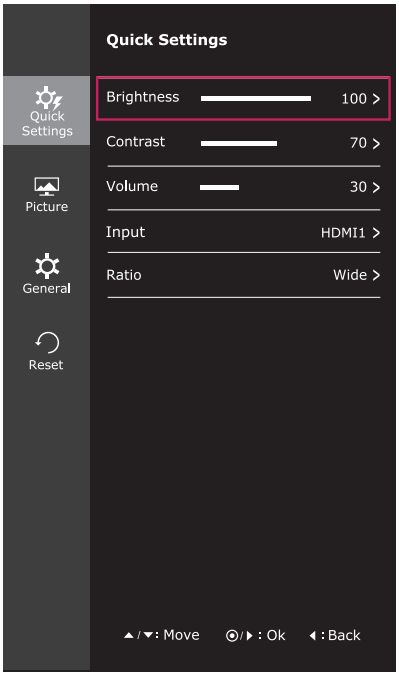

1 To view the **OSD menu**, press the **joystick button** at the bottom of the monitor and then enter the **Menu**.
2 Go to **Quick Settings > Brightness** by moving the joystick.
3 Configure the options following the instructions that appear in the bottom right corner.
4 To return to the upper menu or set other menu items, move the joystick to ◀ or pressing (◉ / OK) it.
5 If you want to exit the OSD menu, move the joystick to ◀ until you exit.

Each option is described below.

Menu > Quick Settings	Description	
Brightness	Adjusts the color contrast and brightness of the screen.	
Contrast		
Volume	Adjusts the volume.	
	NOTE • Jog joystick button down (⏻) in the Volume menu will enable/disable the Mute function.	
Input	Selects the input mode.	
Ratio	Adjusts the screen ratio.	
	Wide	Displays the video in wide-screen, regardless of the video signal input.
	Original	Displays a video according to the input video signal aspect ratio.

NOTE

- The display may look the same for Wide, Original options at the recommended resolution (2560 x 1080).
- The ratio is disabled in the interlaced signal.

-Picture

1 To view the **OSD menu**, press the **joystick button** at the bottom of the monitor and then enter the **Menu**.
2 Go to **Picture** by moving the joystick.
3 Configure the options following the instructions that appear in the bottom right corner.
4 To return to the upper menu or set other menu items, move the joystick to ◀ or pressing (◉ / OK) it.
5 If you want to exit the OSD menu, move the joystick to ◀ until you exit.

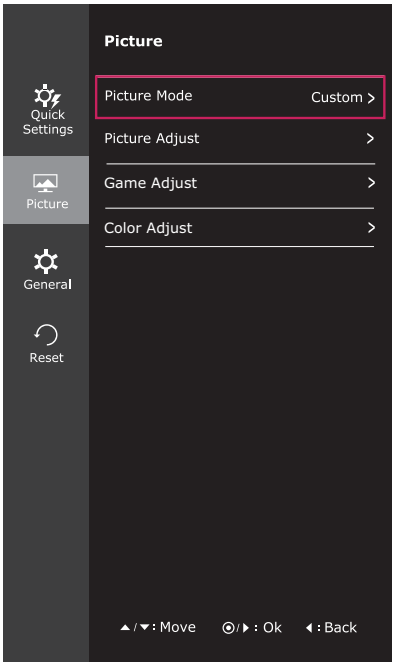

Each option is described below.

Menu > Picture	Description	
Picture Mode	**Custom**	Allows the user to adjust each element. The color mode of the main menu can be adjusted.
	Reader	It is a mode that the screen is adjusted to the best for the newspaper. If you want screen more bright, you can control brightness in Menu OSD.
	Photo	Optimizes the screen to view photos.
	Cinema	Optimizes the screen to improve the visual effects of a video.
	FPS 1	This mode is optimized for FPS games.
	FPS 2	It has a higher Black Stabilizer value than FPS Game 1. It is suitable for very dark FPS games.
	RTS	This mode is optimized for RTS Game.
	Custom (Game)	In this mode, users can customize various elements including game-related options.
Picture Adjust	**Sharpness**	Adjusts the sharpness of the screen.
	Black Level	Sets the offset level (for HDMI only). • **Offset:** as a reference for a video signal, this is the darkest color the monitor can display.
	High	Keeps the current contrast ratio of the screen.
	Low	Lowers the black levels and raises the white levels from the current contrast ratio of the screen.
	DFC	Adjusts the brightness automatically according to the screen.

ENGLISH

Game Adjust	**Black Stabilizer**	Black Stabilizer : You can control the black contrast to have better visibility in dark scenes. Increasing the Black Stabilizer value brightens the low gray level area on the screen. (You can easily distinguish objects on dark game screens.) Reducing the Black Stabilizer value darkens the low gray level area and increases the dynamic contrast on the screen.	
	Response Time	Sets a response time for displayed pictures based on the speed of the screen. For a normal environment, it is recommended that you use Normal. For a fast-moving picture, it is recommended that you use High. Setting to High may cause image sticking.	
		High	Sets the response time to High.
		Middle	Sets the response time to Middle.
		Low	Sets the response time to Low.
		Off	Sets the response time to Off.
Color Adjust	**Gamma**	The higher the gamma value, the darker the image becomes. Likewise, the lower the gamma value, the lighter the image becomes. If you do not need to adjust the gamma settings, select Off.	
	Color Temp	Selects the factory default picture color. **Warm:** Sets the screen color to a reddish tone. **Medium:** Sets the screen color between a red and blue tone. **Cool:** Sets the screen color to a bluish tone.	
		Custom	
		Red **Green** **Blue**	You can customize the picture color using Red, Green, and Blue colors.
	Six Color	Meets the user requirements for colors through adjusting the color and saturation of the six colors(**Red_Hue, Red_Saturation, Green_Hue, Green_Saturation, Blue_Hue, Blue_Saturation, Cyan_Hue, Cyan_Saturation, Magenta_Hue, Magenta_Saturation, Yellow_Hue, Yellow_Saturation**) and saving the settings.	
		*Hue: Adjusts tone of the screen. *Saturation: Adjusts the saturation of the screen colors. The lower the value, less saturated and bright the colors become. The higher the value, the more saturated and dark the colors become.	
	Reset	Returns the color settings to the default settings.	

-General

1 To view the **OSD menu**, press the **joystick button** at the bottom of the monitor and then enter the **Menu**.
2 Go to **General** by moving the joystick.
3 Configure the options following the instructions that appear in the bottom right corner.
4 To return to the upper menu or set other menu items, move the joystick to ◀ or pressing (◉ / OK) it.
5 If you want to exit the OSD menu, move the joystick to ◀ until you exit.

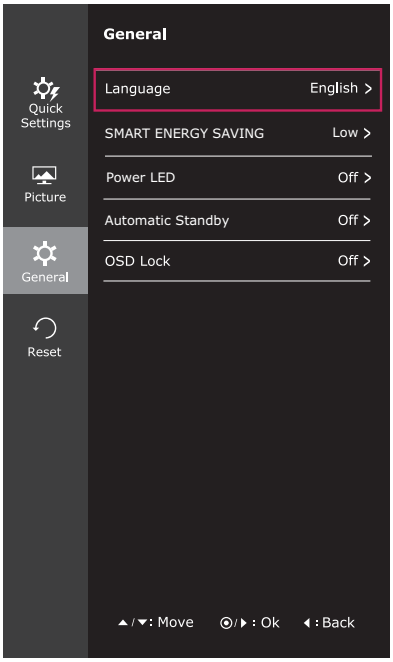

Each option is described below.

Menu > General	Description	
Language	To choose the language in which the control names are displayed.	
SMART ENERGY SAVING	**High**	Enables SMART ENERGY SAVING you can save energy with this energy- high efficient function.
	Low	Enables SMART ENERGY SAVING you can save energy with this energy- low efficient function.
	Off	Disables SMART ENERGY SAVING .
Power LED	Turns the power indicator on the front side of the monitor on/off.	
	On	The power indicator is automatically turned on.
	Off	The power indicator is automatically turned on.
Automatic Standby	The monitor will automatically switch to standby mode after a certain period.	
OSD Lock	Prevents incorrect key input.	
	On	Key input is disabled.
	NOTE All functions except for the OSD Lock mode and the Exit button for Brightness, Contrast, Volume, Input, and General are disabled.	
	Off	Key input is enabled.

NOTE

- SMART ENERGY SAVING: Conserve energy by using luminance compensation algorithm.
- Saving Data depends on the Panel. So,those values should be different from each panel and panel vendor.If option of SMART ENERGY SAVING is High or Low, monitor luminance become higher or lower depend on source.

ENGLISH

-Reset

1 To view the **OSD menu**, press the **joystick button** at the bottom of the monitor and then enter the **Menu**.
2 Go to **Reset** by moving the joystick.
3 Configure the options following the instructions that appear in the bottom right corner.
4 To return to the upper menu or set other menu items, move the joystick to ◀ or pressing (◉ / OK) it.
5 If you want to exit the OSD menu, move the joystick to ◀ until you exit.

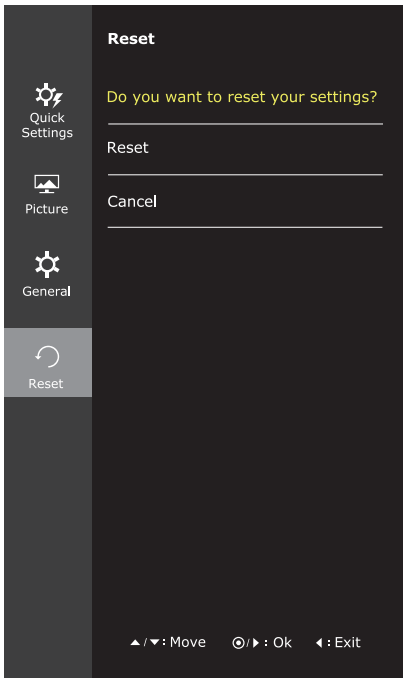

Each option is described below.

Menu > Reset	Description
Do you want to reset your settings?	
Reset	Returns to the default settings.
Cancel	Cancel the select.

-Picture mode

1 Press the joystick button on the bottom of the monitor.
2 Go to **Picture mode** by moving the joystick button to ▲.
3 Configure the options following the instructions that appear in the bottom.

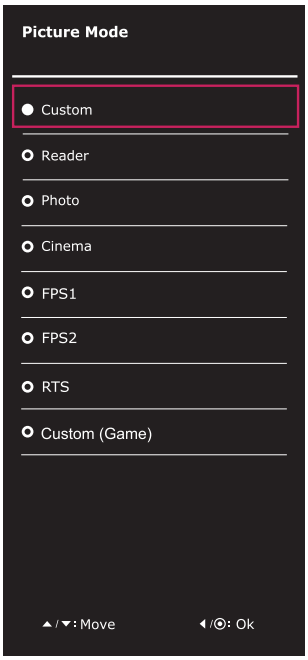

Each option is described below.

Menu > Picture	Description	
Picture Mode	**Custom**	Allows the user to adjust each element. The color mode of the main menu can be adjusted.
	Reader	It is a mode that the screen is adjusted to the best for the newspaper. If you want screen more bright, you can control brightness in Menu OSD.
	Photo	Optimizes the screen to view photos.
	Cinema	Optimizes the screen to improve the visual effects of a video.
	FPS 1	This mode is optimized for FPS games.
	FPS 2	It has a higher Black Stabilizer value than FPS Game 1. It is suitable for very dark FPS games.
	RTS	This mode is optimized for RTS Game.
	Custom (Game)	In this mode, users can customize various elements including game-related options.

TROUBLESHOOTING

Nothing is displayed on the screen.	
Is the monitor's power cord plugged in?	• Check if the power cord is correctly plugged in to the power outlet.
Is the power indicator on?	• Check the power cable connection and press the power button.
Is the power indicator displaying ?	• Check that the connected input is enabled (Menu - Input).
Is the power indicator blinking?	• If the monitor is in sleep mode, move the mouse or press any key on the keyboard to switch the display on. • Check if the computer is turned on.
Is the "OUT OF RANGE" message displayed?	• This occurs when signals transferred from the PC (video card) are out of the horizontal or vertical frequency range of the monitor. Please see the "Product Specification" section of this manual to set the appropriate frequency.
Is the "CHECK SIGNAL CONNECTION" message is displayed?	• This is displayed when the signal cable between the PC and the monitor is missing or disconnected. Check the cable and reconnect.

The screen retains an image.	
Does image sticking occur even when the monitor is turned off?	• Displaying a still image for a prolonged time may cause damage to the screen, resulting in the retention of the image. • Use a screen saver to protect the screen when using the monitor for a prolonged period of time.

NOTE

- **Vertical Frequency:** In order to display an image, the screen must be refreshed dozens of times per second like a fluorescent lamp.
  The number of times the screen is refreshed per second is called vertical frequency or refresh rate and is represented by Hz.
- **Horizontal Frequency:** The time it takes to display one horizontal line is called the horizontal cycle. The number of horizontal lines displayed in one second can be calculated by dividing one by the horizontal cycle. This is called horizontal frequency and is represented by kHz.

NOTE

- Check if the video card's resolution or frequency is within the range allowed by the monitor and set to the recommended (optimal) resolution in **Control Panel > Display > Settings**.
- Failing to set the video card to the recommended (optimal) resolution may result in blurred text, a dimmed screen, a truncated display area or misalignment of the display.
- The configuration procedure may differ depending on your computer and/or operating system. Also, some video cards may not support certain resolutions. If this is the case, contact the manufacturer of the computer or video card for assistance.
- Some video cards may not support the 2560x1080 resolution.
  If the resolution cannot be displayed, contact the manufacturer of your video card.

The display color is abnormal.	
Does the display appear discolored (16 color)?	• Set the color to 24 bit (true color) or higher. In Windows, go to Control Panel > Display > Settings > Color Quality.
Does the display color appear unstable or in monochrome?	• Check if the signal cable is connected properly. Reconnect the cable or reinsert the PC's video card.
Are there spots on the screen?	• When using the monitor, pixilated spots (red, green, blue, white or black) may appear on the screen. This is normal for the LCD screen. It is not an error nor is it related to the monitor's performance.

SPECIFICATIONS

25UM58

LCD Screen	Type	TFT (Thin Film Transistor) LCD (Liquid Crystal Display) Screen
	Pixel Pitch	0.2286 mm x 0.2286 mm
Resolution	Maximum Resolution	2560 x 1080 @ 60 Hz
	Recommended Resolution	2560 x 1080 @ 60 Hz
Video Signal	Horizontal Frequency	30 kHz to 90 kHz
	Vertical Frequency	56~75 Hz (PC)
	Synchronization	Separate Sync.
Input Connector	HDMI IN1, HDMI IN2 , H/P	
Power	Voltage	19 V ⎓ 1.6 A
	Power consumption (Typ.)	On mode: 27 W Typ. (Outgoing condition)** Sleep Mode (Standby Mode) ≤ 0.3 W Off Mode ≤ 0.3 W
AC/DC adaptor	Output: 19 V ⎓ 1.7 A	
Environmental Conditions	Operating Condition	Temperature: 0°C to 40°C; Humidity: ≤ 80%
	Storing Condition	Temperature: -20°C to 60°C; Humidity: ≤ 85%
Stand Angle Adjustment	Forwards/Backwards: -5° to 20° (Head)	
Dimension	Monitor Size (Width x Height x Depth)	
	With Stand	609 mm x 383 mm x 188 mm
	Without Stand	609 mm x 287 mm x 55 mm
Weight (Without Packaging)	4.0 kg	

The specifications are subject to change without notice.
The ~ symbol means alternating current, and the ⎓ symbol means direct current.
* The power consumption level can be different by operating condition and monitor setting.
** The On mode power consumption is measured with LGE test standard (Full White pattern,Maximum resolution)

SPECIFICATIONS

29UM58

LCD Screen	Type	TFT (Thin Film Transistor) LCD (Liquid Crystal Display) Screen
	Pixel Pitch	0.2628 mm x 0.2628 mm
Resolution	Maximum Resolution	2560 x 1080 @ 60 Hz
	Recommended Resolution	2560 x 1080 @ 60 Hz
Video Signal	Horizontal Frequency	30 kHz to 90 kHz
	Vertical Frequency	56~75 Hz (PC)
	Synchronization	Separate Sync.
Input Connector	HDMI IN1, HDMI IN2 , H/P	
Power	Voltage	19 V ⎓ 1.6 A
	Power consumption (Typ.)	On mode: 32 W Typ. (Outgoing condition)** Sleep Mode (Standby Mode) ≤ 0.3 W Off Mode ≤ 0.3 W
AC/DC adaptor	Output: 19 V ⎓ 1.7 A	
Environmental Conditions	Operating Condition	Temperature: 0°C to 40°C; Humidity: ≤ 80%
	Storing Condition	Temperature: -20°C to 60°C; Humidity: ≤ 85%
Stand Angle Adjustment	Forwards/Backwards: -5° to 20° (Head)	
Dimension	Monitor Size (Width x Height x Depth)	
	With Stand	703 mm x 414 mm x 213 mm
	Without Stand	703 mm x 328 mm x 64 mm
Weight (Without Packaging)	5.2 kg	

The specifications are subject to change without notice.

The ~ symbol means alternating current, and the ⎓ symbol means direct current.

* The power consumption level can be different by operating condition and monitor setting.

** The On mode power consumption is measured with LGE test standard (Full White pattern,Maximum resolution)

SPECIFICATIONS

34UM58

LCD Screen	Type	TFT (Thin Film Transistor) LCD (Liquid Crystal Display) Screen
	Pixel Pitch	0.312(H) mm x 0.310(V) mm
Resolution	Maximum Resolution	2560 x 1080 @ 60 Hz
	Recommended Resolution	2560 x 1080 @ 60 Hz
Video Signal	Horizontal Frequency	30 kHz to 90 kHz
	Vertical Frequency	(PC)56Hz to75 Hz
	Synchronization	Separate Sync.
Input Connector	HDMI IN1, HDMI IN2 , H/P	
Power	Voltage	19 V ⎓ 2.0 A
	Power consumption (Typ.)	On mode: 41 W Typ. (Outgoing condition)** Sleep Mode (Standby Mode) ≤ 0.5 W Off Mode ≤ 0.3 W
AC/DC adaptor	Output: 19 V ⎓ 2.1 A	
Environmental Conditions	Operating Condition	Temperature: 0°C to 40°C; Humidity: < 80%
	Storing Condition	Temperature: -20°C to 60°C; Humidity: < 85%
Stand Angle Adjustment	Forwards/Backwards: -5° to 20° (Head)	
Dimension	Monitor Size (Width x Height x Depth)	
	With Stand	830 mm x 461 mm x 213 mm
	Without Stand	830 mm x 382 mm x 66 mm
Weight (Without Packaging)	6.4 kg	

The specifications are subject to change without notice.
The ~ symbol means alternating current, and the ⎓ symbol means direct current.
* The power consumption level can be different by operating condition and monitor setting.
** The On mode power consumption is measured with LGE test standard (Full White pattern,Maximum resolution)

Factory support mode

Preset Mode	Horizontal Frequency (kHz)	Vertical Frequency (Hz)	Polarity (H/V)	Remarks
720 x 400	31.468	70.08	-/+	
640 x 480	31.469	59.94	-/-	
640 x 480	37.5	75	-/-	
800 x 600	37.879	60.317	+/+	
800 x 600	46.875	75	+/+	
1024 x 768	48.363	60	-/-	
1024 x 768	60.123	75.029	+/+	
1152 x 864	67.5	75	+/+	
1280 x 720	45	60	+/+	
1280 x 1024	63.981	60.02	+/+	
1280 x 1024	79.976	75.025	+/+	
1600 x 900	60	60	+/+	
1680 x 1050	65.290	59.954	-/+	
1920 x 1080	67.5	60	+/-	
2560 x 1080	66.7	60	-/+	

HDMI Timing (Video)

Preset Mode	Horizontal Frequency (kHz)	Vertical Frequency (Hz)	Remarks
480P	31.50	60	
576P	31.25	50	
720P	37.50	50	
720P	45.00	60	
1080P	56.25	50	
1080P	67.50	60	

Power Indicator

Mode	LED Color
On Mode	Light On
Power-saving	Blinking
Off Mode	Off

PROPER POSTURE

Proper Posture for Using the Monitor

Adjust the screen so that you can comfortably view at a slight downward angle from your natural eye level.

- Take a break for approximately ten minutes every hour to reduce any fatigue caused by long-time usage.
- The stand of the touch monitor allows the product to be used in the optimum position.
  Adjust the stand angle to obtain the best view of the screen.

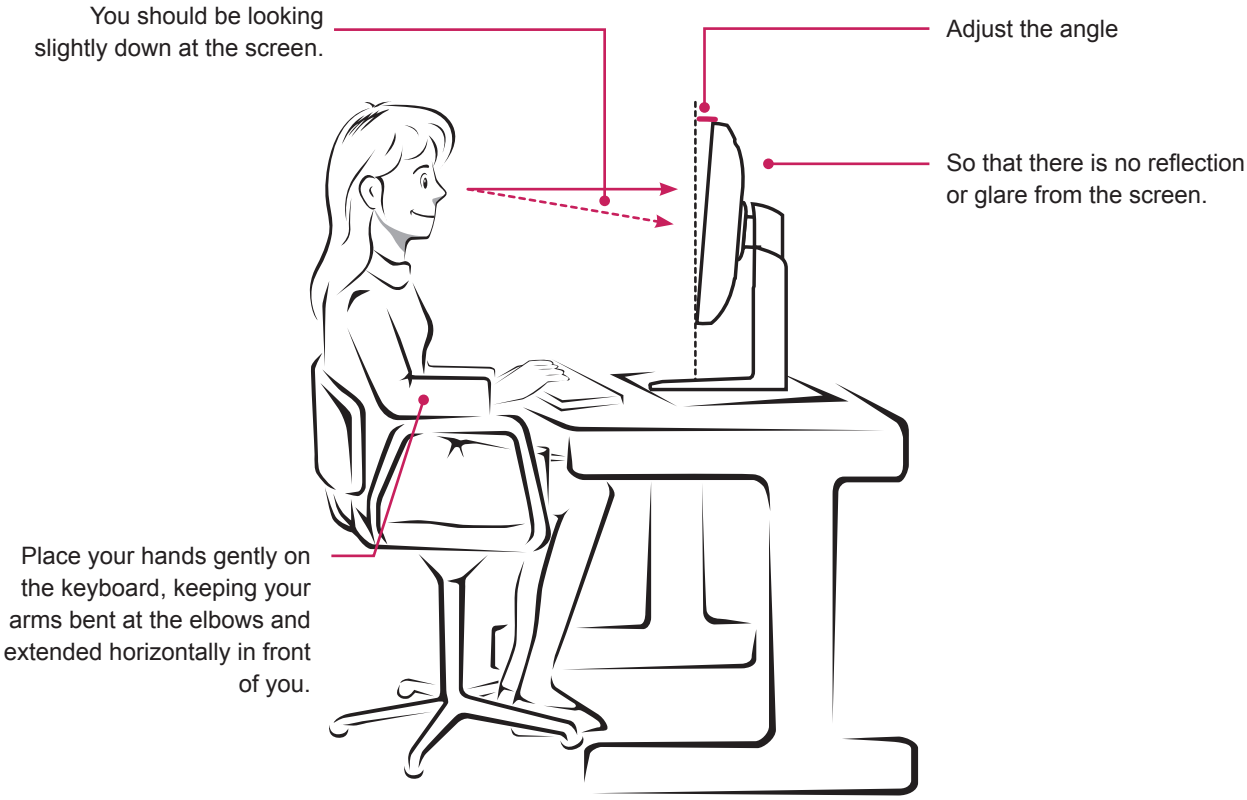

Make sure to read the Safety Precautions before using the product.
The model and serial number of the product are located on the back and on one side of the product. Record them below in case you ever need service.

MODEL _____

SERIAL _____