OWNER'S MANUAL

LG LED Screen

Please read this manual carefully before operating your set and retain it for future reference.

LAA015FL9B3
LAA015FL9B4
LAA015FL9B5
LAA015FL9B6

www.lg.com

Copyright © 2020 LG Electronics Inc. All Rights Reserved.

TABLE OF CONTENTS

SAFETY PRECAUTIONS 3

- Precautions for the AC Adapter and Power 4
- Precautions for Moving the Product.....6
- Precautions for Installing the Product 7
- Precautions for Cleaning the Product.....9
- Precautions for Using the Product.....10
- Precautions for Using the Remote control.....12
- Precautions for Experiencing Image Retention.....13
- Product Disposal.....13

ASSEMBLY AND PREPARATION..... 14

- Parts and Buttons.....15
- Storage Method for Panel Protection.....17
- Installation Precautions Guide.....18
- Installation Location.....20

REMOTE CONTROL 22

MAKING CONNECTIONS..... 24

- Connecting to a PC.....24
- External Device Connection.....24
- Using the Input List 26
- Daisy Chain Monitors 26

TROUBLESHOOTING..... 27

PRODUCT SPECIFICATIONS..... 28

LICENSES..... 31

WARNING - This equipment is compliant with Class A of CISPR 32. In a residential environment this equipment may cause radio interference.

SAFETY PRECAUTIONS

The Safety Precautions are intended to prevent unexpected danger or harm by helping the user to use the product safely and for its intended purpose.

⚠ WARNING

If you ignore the warning message, you may be seriously injured or there is a possibility of accident or death.

⚠ CAUTION

If you ignore the caution message, you may be slightly injured or the product may be damaged.

⚠ WARNING

This product cannot be installed outdoors. Only use the product indoors as installed by the installer.

Precautions for the AC Adapter and Power

⚠ WARNING

- Use only the power cord or AC adapter provided or approved by LG Electronics, Inc. If you use another power cord, make sure that it is certified by the national standards. If the power cable is faulty in any way, please contact the manufacturer or the nearest authorized service center for a replacement.
- Operate the display only from a power source(i.e. voltage) indicated in the product specification.
  - Otherwise the product can be damaged, fire can occur or you may be electrocuted. If you are not sure what type of power supply you have, consult a certified installation company.
- Make sure the power cord connect to a properly grounded outlet.
  - If you do not you may be electrocuted or injured or the product can be damaged.
- Insert the power plug or AC adapter firmly so it cannot come loose.
  - Poor connection may cause a fire or electric shock.
- In the presence of thunder and lightning, never touch the power cord and signal cable because it can be very dangerous.
  - It can cause electric shock.
- Be careful not to step or place heavy objects (electronic appliances, clothing, etc.) on the power cord or AC adapter. Additionally, do not bend or pull out the power cord or AC adapter with excessive force.
  - Damaged power cords may cause a fire or electric shock.
- Do not connect power cord or AC adapter damaged with sharp objects to power outlet.
  - You may be electrocuted.
- Do not insert a conductor (like a metal chopstick) into one end of the power cord while the other end is connected to the input terminal on the wall. Additionally, do not touch the power cord right after unplugged.
  - You may be electrocuted.
- Do not use with a multi-outlet connected by many electrical product and heating devices. Use an exclusive multi-outlet with a grounding terminal.
  - A fire can break out due to overheating.

- If water or any foreign substance goes inside the product, disconnect the power cord immediately and contact the service center.
  - Otherwise, this may cause a fire or electric shock due to damage to the product.
- Keep the power cord or AC adapter away from any heating devices.
  - The cord coating may melt and cause fire or electric shock.
- Never disassemble, repair or modify the power cord or AC adapter.
  - This may cause a fire or electric shock.
- Please make sure the main power cutoff device is power cord and the product is installed near the wall outlet that is easily accessible.
- As long as this unit is connected to the AC wall outlet, it is not disconnected from the AC power source even if the unit is turned off.
- Power consumption will be '0' only when the power plug is unplugged.
- Use an appliance coupler as a disconnect device.

⚠ CAUTION

- If the outlet, pins of the power plug, or AC adapter is covered with dust, be sure wipe and keep clean.
  - Overheating due to layers of dust may cause a fire or electric shock.
- If the outlet, pins of the power plug, or AC adapter is covered with water, be sure wipe and keep clean. Additionally, Do not touch the power plug or AC adapter with wet hands.
  - This may cause an electric shock.
- Do not turn the product on or off by plugging in or unplugging the power plug from the power outlet. It means do not use the power plug as a switch.
  - This may cause an electric shock or product malfunction.
- Do not unplug the power cord while the product is in use.
  - Electrical shock can damage the product.

Precautions for Moving the Product

WARNING

- Contact the service center before moving the product.
  - It may cause electric shock and damage the product.
- Make sure the product is turned off, unplugged, and all cables have been removed before the product is moved.
  - You may be electrocuted or the product can be damaged.
- When moving the product, Do not shock the product and impact on the front panel of the product.
  - You may be electrocuted or the product can be damaged.
- Comply with the number of people according to weight of product. (Under 25 kg per person, use the equipment when exceed 100 kg)
  - If use the damaged product again, contact the service center because it can cause electric shock or fire.
- Do not hold it upside down while holding only the stand. (It is for stand supported models only.)
  - This may cause stand warping, panel damage and other types of product damage.

CAUTION

- Do not dispose the product-packing box. It may be used put the product in the box when carrying it.

Precautions for Installing the Product

⚠ WARNING

- Contact the service center before installing the product.
  - It can cause electric shock and damage the product.
- Do not drop an object on or impact on the product. Keep out of reach of children and do not place toys or objects near the product to prevent throwing things on the product screen.
  - It can cause injury to human, problem to product and damage the display.
- Do not put heavy objects on, or hang from, the product.
  - If the product collapses or is dropped, you may be injured.
- Do not touch the surface of product to overheat.
  - It can cause injury to human.
- Install the product firmly fixed on a floor, wall, etc. to prepare against external impact such as wind and earthquake.
  - You must refer to the manual provided.
- Prevent Children from climbing or hanging on the product.
  - If the product collapses or is dropped, you may be injured.
- Do not install it where there are heating devices such as electrical heaters or lighting equipment.
  - Fire, electrical shock, malfunction may occur.
- Do not install this product by yourself as you may injure yourself or cause damage to product. Please contact service engineer authorized by service center.
- Do not install this product on a wall if it could be exposed to oil or oil mist.
  - This may damage the product and cause it to fall.
- Do not leave the power or signal cable, etc. on the pathway.
  - This could cause a trip or fall, which can be caused electrical shock, fire, product breakdown, or injury.
- Do not let the product drop when connecting it to an external device connected with a short cable.
  - This may cause injury and damage to the product.
- If you dropped the product or the case is broken, turn off the product and unplug the power cord and contact the service center.
  - If you continue to use without taking proper measures, electrical shock or fire can occur.
- Install the product in a dry place where it is not near dust and water. Avoid high temperatures and humidity.
  - This may cause electrical shock, fire or product damage.
- Safely install the product in a place that can hold the weight of the product.
  - A lack of strength may cause the product to fall.
- Take a comfortable and natural position to relax the muscles when working with a product.

⚠ CAUTION

- Install the product where no Electromagnetic Interference occurs.
- If you install the product in a place that does not meet the recommended conditions, this may cause serious damage to the product's picture quality, life cycle, and appearance. Please check with service engineer before installing. Please do not install the product in places such as where there is an abundance of fine dust or oil mist, chemical substances are used, exposed to direct sunlight, the temperature is very high or low, the humidity is very high.
- Make sure the product is well ventilated by Installing at a distance (100 mm or more) from the wall.
  - If you install the product too close to the wall, it may be deformed or fire can break out due to internal heat buildup.
- Do not cover the product with tablecloth or curtain or other material (eg. plastic) while plugged in to block the ventilation hole of the product.
  - The product can be deformed or fire can break out due to overheating inside the product.
- Do not install the product in an area with poor ventilation (e.g. on a bookshelf, in a closet) or outside and avoid placing on cushions or carpets.
  - The product could catch fire due to overheating inside the product.
- Install the product on a flat and stable place that is large enough to support the product.
  - If the product is dropped, you may be injured or the product may be broken.
- When installing the product on a shelf or cabinet, make sure that the bottom end of the product is not protruding forward.
  - The product may fall due to unbalanced center of gravity, which may cause personal injury or damage to the product. Be sure to use cabinets or shelves that fit your product.

Precautions for Cleaning the Product

WARNING

- Keep the product clean at all times.
  - If you don't clean the unit for a long time and it becomes covered in dust, it can cause fire or product damage.
- When you need to clean the inside of the product, you must contact the service center.
  - Otherwise, cleaning without support may cause a fire, electric shock, or damage to the product.
- When cleaning the product, unplug the power cord and wipe gently with a soft cloth to prevent scratching.
  - An electric shock may occur or damage to the screen as get a scratch.
- When you want to clean the front frame, spray water onto a soft cloth 2 to 4 times and wipe in one direction only.
  - Too much moisture may cause staining.
- Do not physically come in contact with the screen of the LED Package.
  - This may cause damage to the product.
- To clean the product, use an air gun to lightly remove dust from the front frame and the screen.
  - If there are foreign substances in between the LEDs on the screen, it may cause a defect in the screen.

CAUTION

- When cleaning the product or the screen, unplug the power cord and wipe it gently with a soft cloth. Do not spray water or other liquids directly on the product. Especially, do not clean your product with chemicals including glass cleaner, any type of air freshener, insecticide, lubricants, wax (car, industrial), abrasive, thinner, benzene, alcohol, etc., which can damage the product or its panel.
  - This may result in fire, electric shock or product damage (deformation, corrosion or breakage).

Precautions for Using the Product

⚠ WARNING

- Do not use the product in any environment with excessively high temperatures or humidity.
- If you use the product for a long period of time, take a rest from time to time to protect your vision.
  - Extended viewing could result in impaired vision.
- Listening at high volume or using for a long time can cause damage to your hearing.
- In the event that liquid or a foreign object falls into the product, please switch it off and unplug it from the wall outlet and contact the service center.
  - Otherwise, the product may cause fire or electric shock.
- In the event that no image appears on the screen or no sound is heard, stop using the product. Switch it off immediately, unplug it from the power outlet and contact the service center.
  - Otherwise, the product may cause fire or electric shock.
- Do not drop an object or impact on the product or screen.
  - It can cause injury to human, problem to product and damage the screen.
- If you can smell smoke or other odors or hear a strange sound, unplug the power cord and contact the service center.
  - If you continue to use the product without taking proper measures, it may cause electrical shock or fire.
- Do not attempt to disassemble, repair or modify the product yourself. Please contact service center if you need to repair it.
  - Fire or electric shock can occur.
- Do not place objects filled with liquids, such as vases, cups, etc. on over of the product to prevent liquid from entering the product.
  - Failure to do so may result in fire, electric shock, malfunction or deformation.
- Do not push hard on or scratch the product's surface with your hands or sharp objects, such as nails, pencils or pens. Do not shock or scratch the front and sides of the screen with metallic objects.
  - This may damage the products and cause it to malfunction.
- Do not touch the product if it has been exposed to sunlight or an intense light because it could be hot.

- Do not use high voltage electrical goods near the product (e.g., a bug zapper).
  - This may result in product malfunction if it receives an electrical shock.
- If there is a gas leak, do not touch the outlet, and open the windows for ventilation.
  - Otherwise, the product may cause fire or electric shock.
- If you dropped the product or the case is broken, turn off the product and unplug the power cord.
  - If you continue to use without taking proper measures, electrical shock or fire can occur. Contact the service center.
- Keep small accessories out of the reach of children.
  - If a child swallows it, consult a doctor immediately.
- Keep out of reach of children from the product. Also, do not throw toys or objects to the product or screen.
  - It can cause injury to human, problem to product and damage the screen.
- All the power sources must be disconnected by removing the power cables to remove all power from the unit.

⚠ CAUTION

- This panel is an advanced product that contains millions of pixels. You may occasionally see pixel spots when viewing the screen. Since these deactivated pixels are not a defect, the performance and reliability of the product is not affected.
- Do not put or store inflammable substances near the product.
  - There is a danger of explosion or fire.
- Keep the proper distance from the product.
  - It can cause damage to your vision if you look at the product too closely.
- Set the appropriate resolution and frequency by products.
  - It can cause damage to your vision.
- Take a regular break when working with the product for a long time.

Precautions for Using the Remote control

WARNING

- Avoid places with high humidity.
  - It may cause electrical shock or damage the product.
- Do not expose batteries to excessive heat, such as direct sunlight, open fireplace, and electric heaters.
  - It may cause fire and you may be injured.
- Make sure that children do not swallow the remote control batteries when you replace them. Keep batteries out of reach of children.
  - If a child swallows a battery, consult a doctor immediately.
- Do not dispose of batteries in a fire.
  - Please dispose batteries at a local recycling center or a retail store that handles batteries.
- Used batteries, which include rechargeable batteries, should be recycled separately from waste.
  - Please dispose used batteries and rechargeable batteries at a local recycling center or a retail store that handles batteries.

CAUTION

- Do not short circuit and disassemble of batteries.
  - It may cause electrical shock or fire.
- The remote control may not function properly in sunlight or under a strong lamp. Move the product if it is being used in these conditions.
- Check if there is any obstacle between the product and the remote control.
- Do not mix new batteries with old batteries.
  - Overheating or leaking batteries may cause fire or electric shock.
- Only use the specified type of battery. Do not insert batteries that are not rechargeable into the charger.
  - Overheating or leaking batteries may cause fire or electric shock.

Precautions for Experiencing Image Retention

- Displaying a still image for a prolonged period of time may cause damage to the screen, resulting in image retention. Most third-party products have the same issue. The resulting damage is not covered by the product warranty.
  - Use a screen saver when using the monitor for a prolonged period of time.

Product Disposal

- Do not dispose of this product with general household waste.
- Disposal of this product must be carried out in accordance to the regulations of your local authority.

ASSEMBLY AND PREPARATION

⚠ CAUTION

- Always use genuine components to ensure safety and product performance.
- The product warranty will not cover damage or injury caused by the use of counterfeit components.
- Connect the power cord to the product before you plug it into a wall outlet. Plugging the power cord into a wall outlet first may cause an electric shock, which can also damage the product.
- The warranty will not cover any damage caused by using the product in an excessively dusty environment.

NOTE

- The accessories provided with your product may vary depending on the model or region.
- Product specifications or contents in this manual may be changed without prior notice due to upgrade of product functions.
- SuperSign Software & Manual
  - Downloading from the LG Electronics website.
  - Visit the LG Electronics website *http://partner.lge.com* and download the latest software for your model.

How to use the ferrite core

1 Use the ferrite core to reduce the electromagnetic interference in the power cable. Wind the power cable on the ferrite core once.

2 Place the ferrite core close to the monitor.

Parts and Buttons

LAA015FL9B3, LAA015FL9B5

The image may be different according to the model.

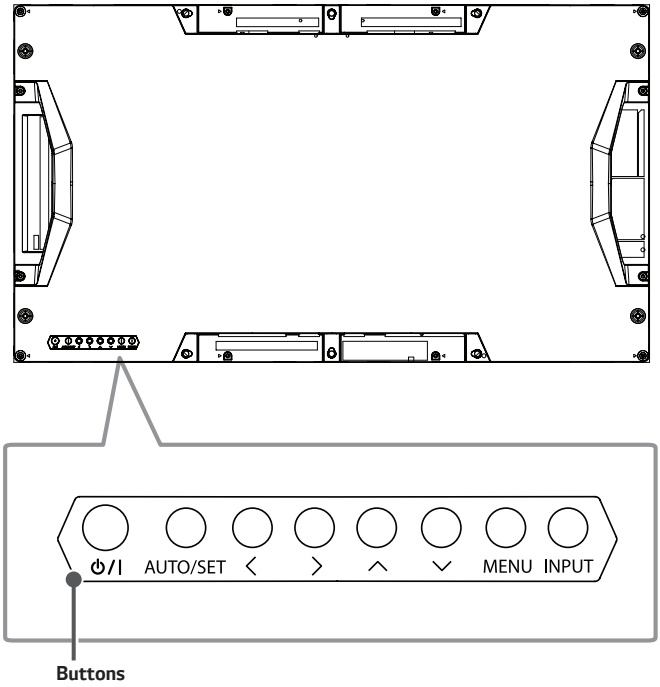

- ⏻/I: Turns the power on or off.
- **AUTO/SET**: Displays the current signal and mode.
- < >: Moves left and right.
- ∧ ∨: Adjust the up and down.
- **MENU**: Accesses the main menus, or saves your input and exits the menus.
- **INPUT**: Changes the input source.

LAA015FL9B4, LAA015FL9B6

The image may be different according to the model.

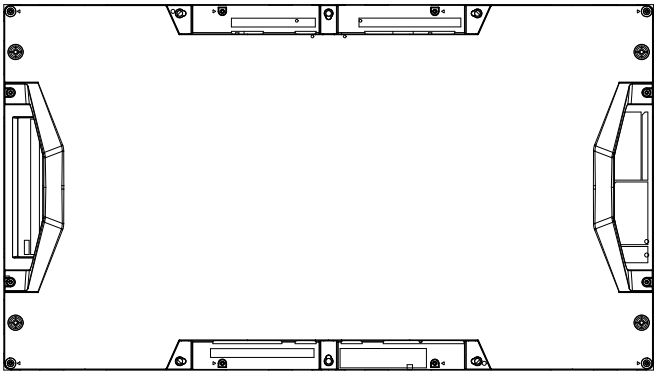

Storage Method for Panel Protection

Correct Method

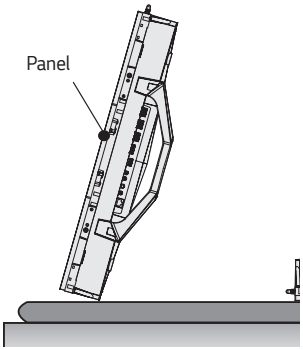

If the product needs to be set upright, hold both sides of the product, and tilt backward carefully. Do not let the panel touch the floor.

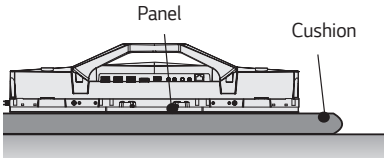

When laying down the product, lay a cushion on a flat floor. Put the product on it with the panel of the product facing down.

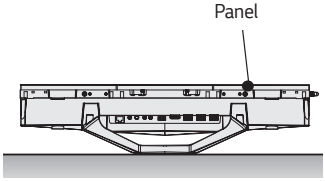

If there is not a cushion available, ensure the floor is clean and then lay the product down carefully with the panel facing upward. At this time, be careful for objects not to fall on the panel.

Incorrect Method

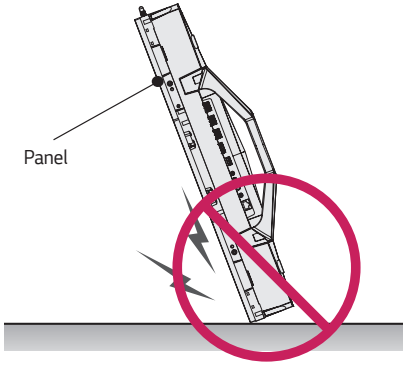

If the product is tilted onto the bezel, the bottom of the panel may be damaged.

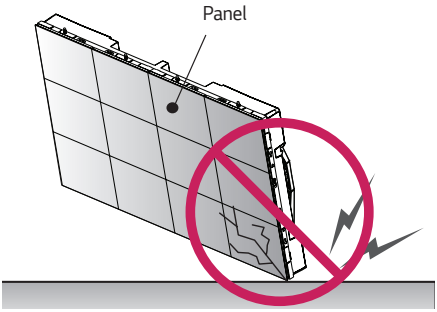

If the product is tilted onto the edge of the panel, the panel may be damaged.

Installation Precautions Guide

Temperature

- Make a cooling system for the enclosure so that the operating temperature of the product can be maintained.
  - Product operating temperature: 0 °C to 40 °C (the recommended room temperature is below 25 °C.)
- Install in a location where the warm air from an air conditioner does not directly affect the product.
  - This will prevent malfunctions such as the screen turning off.

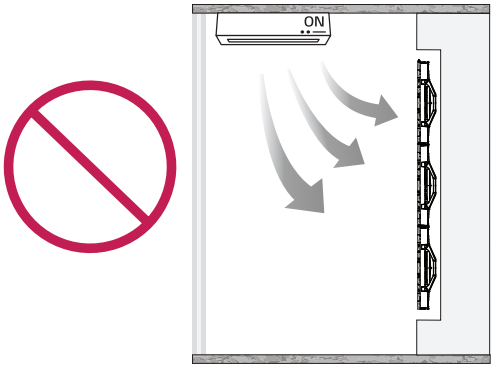

Direct Sunlight

- Install in a location that is not exposed to direct sunlight.
  - This will prevent the screen from appearing blurry due to light reflection.

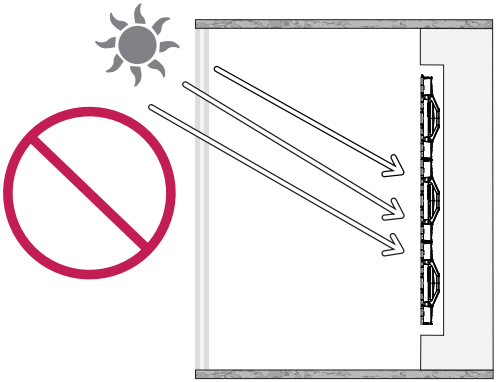

Installation Position

- Ensure the distance from the ceiling of the installation room to the product is at least 400 mm.
  - The high temperature air collected at the ceiling will naturally circulate to prevent malfunction.
- Ensure the distance from the floor of the installation room to the product is at least 100 mm.
  - The air from the floor will easily circulate to the ceiling to prevent malfunctions.

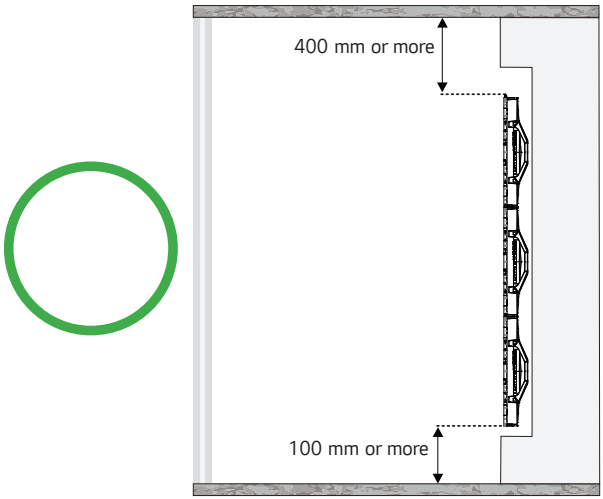

Installation Location

Installing on a Recessed Wall

- After installation on a recessed wall, a bezel can be installed for interior purposes.

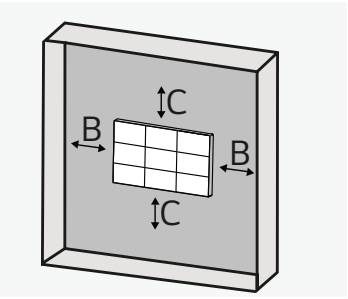

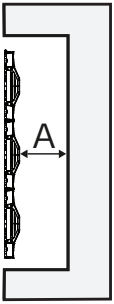

A : 100 mm or more
B : 25 mm or more
C : 60 mm or more

When Installing the Bezel

- Ensure it can be detached for product repair.
- For the top / bottom bezels, secure at least 60 % of the air vent to facilitate air circulation.
  - This will prevent malfunction.

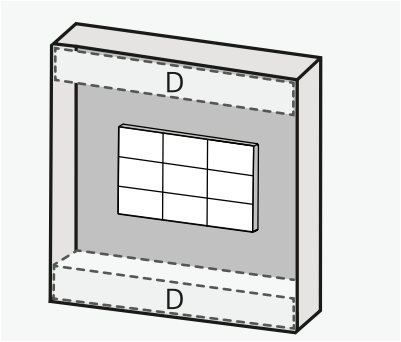

D : Air Vent
(60 % or more)

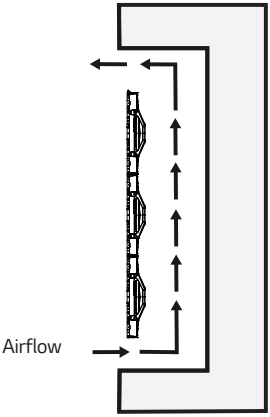

Installing on a Wall

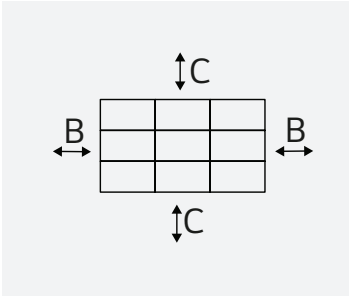

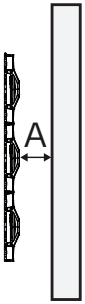

A : 100 mm or more
B : 25 mm or more
C : 60 mm or more

REMOTE CONTROL

The descriptions in this manual are based on the buttons on the remote control. Please read this manual carefully to use the monitor correctly. To install batteries, open the battery cover, place batteries (1.5 V AAA) matching ⊕ and ⊖ terminals to the labels inside the compartment, and close the battery cover. To remove the batteries, perform the installation actions in reverse. The illustrations may differ from the actual accessories.

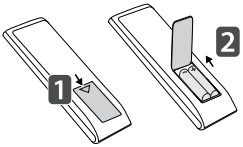

⚠ CAUTION

- Do not mix old and new batteries, as this may damage the remote control.
- Be sure to point the remote control toward the remote control sensor on the monitor.
- Some features of the remote control may not be supported in certain models.
- The product's internal and external batteries should not be exposed to excessive heat such as direct sunlight, fire, or the like.

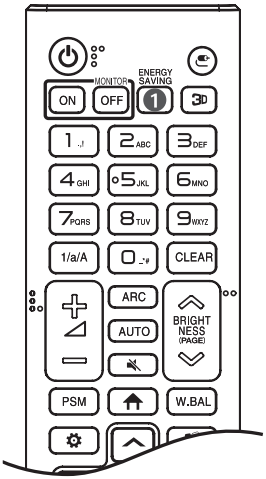

(POWER) Turns the monitor on or off.

MONITOR ON Turns the monitor on.

MONITOR OFF Turns the monitor off.

1 ENERGY SAVING Adjusts the brightness of the picture to reduce energy consumption.

(INPUT) Selects the input mode.

3D Turns the display layout pattern on.

Number and Alphabet buttons Enters numerical or alphabetical characters depending upon the setting.

1/a/A Toggles between numerical and alphabetical.

CLEAR Deletes the entered numerical or alphabetical character.

(Volume Up/Down Button) Adjusts the volume.

ARC Selects the Aspect Ratio mode.

AUTO Automatically adjusts picture position and minimizes image instability (available for RGB input only).

(MUTE) Mutes all sounds.

BRIGHTNESS Adjusts the brightness of the display.

PAGE The function is not supported in this model.

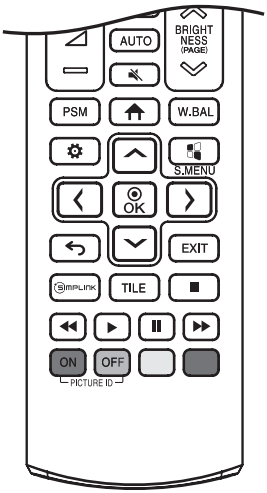

PSM Selects the Picture Mode.

(HOME) Activates the Launcher.

W.BAL Enters the White Balance menu.

(SETTINGS) Accesses the main menus or saves your input and exit menus.

S.MENU SuperSign menu key.

(Navigation Buttons) Scrolls through menus or options.

OK Selects menus or options and confirms your input.

(BACK) Allows you to move back one step in the user interaction function.

EXIT Quit all OSD tasks and applications.

SIMPLINK Allows you to control various multimedia devices to enjoy multimedia simply by using the remote control through the SimpLink menu.

TILE Selects the TILE Mode.

PICTURE ID ON/OFF When the Picture ID number matches the Set ID number, you can control whichever monitor you want in multi-display format.

(USB Menu Control Buttons) Controls media playback. (May not be supported on some models.)

MAKING CONNECTIONS

You can connect various external devices to your monitor. Change the input mode and select the external device you want to connect. For more information about external device connections, see the user manual provided with each device.

Connecting to a PC

Some of the cables are not provided. This monitor supports the Plug and Play* feature.

* Plug and Play: a feature that enables a PC to recognize devices attached by the user without device configuration or user intervention when powering up.

External Device Connection

Some of the cables are not provided. Connect a HD receiver, DVD, or VCR player to the monitor and select an appropriate input mode.

For the best picture and sound quality, connecting external devices to your monitor using HDMI cables is recommended.

NOTE

- For the best image quality, using the monitor with HDMI connection is recommended.
- To comply with the specifications of the product, use a shielded interface cable with ferrite core, such as a HDMI cable.
- If you turn the monitor on when the set is cold, the screen may flicker. This is normal.
- Sometimes red, green, or blue spots may appear on the screen. This is normal.
- Use a High Speed HDMI®/™ cable (shorter than 3 meters).
- Use a certified cable with the HDMI logo attached. If you do not use a certified HDMI cable, the screen may not display or a connection error may occur.
- Recommended HDMI Cable Types
  - High Speed HDMI®/™ Cable
  - High Speed HDMI®/™ Cable with Ethernet
- If you cannot hear any sound in HDMI mode please check your PC settings. Some PCs require you to manually change the default audio output to HDMI.
- If you want to use HDMI-PC mode, you must set your PC/DTV to PC mode.
- You may experience compatibility issues if you use HDMI-PC mode.
- Make sure the power cable is disconnected.
- If you connect a gaming device to the monitor, use the cable provided with the gaming device.
- High Speed HDMI®/™ cables transmit a HD signal up to 1080p and higher.
- When connecting an external audio device, use a device with audio amplifier.

CAUTION

- Do not press the screen with your finger for a prolonged period as this may result in temporary distortion on the screen.
- Avoid displaying static images on the screen for a long period of time to prevent image retention. Use a screensaver if possible.
- A wireless communication device near your monitor can affect the image.

Using the Input List

(HOME) →

- HDMI1 → HDMI2 → HDMI3 → DISPLAYPORT

Daisy Chain Monitors

To use multiple products, first connect an external device to the product, connect one end of the supported signal input cable to the OUT connector of the product, and then connect the other end to the IN connector of the product you wish to connect to.

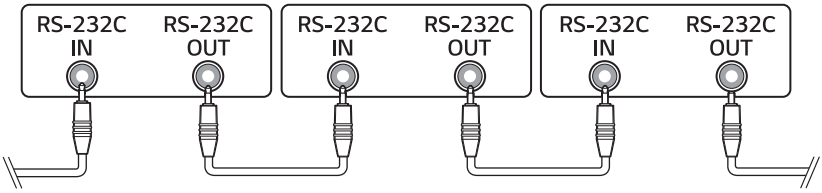

NOTE

- If the signal cable between the product and your PC is too long, make sure to use a Booster or optical cable.
- Daisy chaining the video output may be limited depending on the performance of the input device that supports HDCP.

TROUBLESHOOTING

No image is displayed.

- Is the power cord connected to the product?
  - Check if the power cord is correctly plugged into the power outlet.
- Did you install the driver?
  - Check if the Plug and Play function is supported by referring to the graphics card user manual.

Issues Related to Screen (Video)

- Is the screen position wrong?
  - Check if the graphics card resolution and frequency are supported by the product. If the frequency is out of range, set to the recommended resolution in the “Display” settings in Control Panel.
- The screen is displayed abnormally.
  - The proper input source is not connected to the port. Connect a cable that matches the input source signal.

Issues Related to Screen (Color)

- After-image appears when the product is turned off.
  - If you display a still image on the screen for a long time, the LED package may be damaged rapidly. Use the screen-saver function.
  - When a dark image is displayed on the screen after an image with high contrast (black and white or grey), this may cause image sticking. This is normal for LED products.
- Screen has poor color resolution (16 colors).
  - Set the color depth to more than 24 bits (true color).
- Screen color is unstable or mono-colored.
  - Check the connection status of the signal cable. Or, re-insert the PC graphics card.

Other Issues

- The power suddenly turned off.
  - Check if the auto-off function is activated on the settings related time.
  - Power source has not being supplied properly. See if the product power cord is connected properly.

PRODUCT SPECIFICATIONS

The product specifications below may be changed without prior notice due to upgrade of product functions.
" ~ " refers to alternating current (AC), and " ⎓ " refers to direct current (DC).

Pixel pitch (distance between pixels)		1.5 mm
Resolution		640 x 360 - LDM Resolution: 160 x 120
Environmental Conditions	Operating Temperature	0 °C to 40 °C
	Operating Humidity	10 % to 80 %
	Storage Temperature	-20 °C to 60 °C
	Storage Humidity	5 % to 85 %
Audio	Input Sensitivity	0.7 Vrms

LAA015FL9B3, LAA015FL9B5

Video signal	Maximum resolution	3840 x 2160 @ 30 Hz - This may not be supported on some OS or graphics card types.
	Recommended resolution	1920 x 1080 @ 60 Hz - This may not be supported on some OS or graphics card types.
	Horizontal frequency	30 kHz to 83 kHz
	Vertical frequency	30 Hz, 56 Hz to 60 Hz
	Synchronization	Separate Sync, Digital
Input/ Output ports		HDMI IN, DP IN, USB 2.0 IN, AUDIO OUT, RS-232C IN/OUT, IR IN, LAN IN, DATA OUT, AC IN/OUT
Embedded battery		Applied

* DP Cable: Use a DP cable that is certified to a DP 1.1a (SST) standard or higher.

LAA015FL9B3, LAA015FL9B5

Power	Rated Voltage	100-240 V~ 50/60 Hz 9.0 A / 9.0 A
	Power Consumption	On Mode: 410 W (Max.) Sleep Mode: ≤ 0.5 W Standby Mode: ≤ 0.5 W
Dimensions (Width x Height x Depth) / Weight	960 mm x 540 mm x 128.5 mm / 19.34 kg	

LAA015FL9B4, LAA015FL9B6

Power	Rated Voltage	100-240 V~ 50/60 Hz 9.0 A / 9.0 A
	Power Consumption	On Mode: 390 W (Max.) Sleep Mode: ≤ 0.5 W Standby Mode: ≤ 0.5 W
Dimensions (Width x Height x Depth) / Weight	960 mm x 540 mm x 128.5 mm / 17.85 kg	

HDMI/ DisplayPort (PC) Support mode

Resolution	Horizontal frequency (kHz)	Vertical frequency (Hz)
800 x 600	37.879	60.317
1024 x 768	48.363	60
1280 x 720	44.772	59.855
1366 x 768	47.7	60
1280 x 1024	63.981	60.02
1680 x 1050	65.29	59.954
1920 x 1080	67.5	60
3840 x 2160	67.5	30

HDMI/ DisplayPort (DTV) Support mode

Resolution	Horizontal frequency (kHz)	Vertical frequency (Hz)
480/60p	31.5	60
576/50p	31.25	50
720/50p	37.5	50
720/60p	45	60
1080/50i	28.1	50
1080/60i	33.75	60
1080/50p	56.25	50
1080/60p	67.432	59.94
1080/60p	67.5	60
2160/30p	67.5	30

NOTE

- When the cable is connected to the HDMI or the DisplayPort, you can select the PC/DTV mode optionally. It is recommended that you select PC mode when connecting to a PC and select DTV mode when connecting to other devices. The DTV mode refers to all modes excluding the PC mode.
- Vertical frequency: The product display functions by the screen image changing dozens of times every second like a fluorescent lamp. The vertical frequency or refresh rate is the number of image displays per second. The unit is Hz.
- Horizontal frequency: The horizontal interval is the time taken to display one horizontal line. When 1 is divided by the horizontal interval, the number of horizontal lines displayed every second can be tabulated as the horizontal frequency. The unit is kHz.

LICENSES

Supported licenses may differ by model. For more information of the licenses, visit *www.lg.com*.



The terms HDMI, HDMI High-Definition Multimedia Interface, HDMI trade dress and the HDMI Logos are trademarks or registered trademarks of HDMI Licensing Administrator, Inc.

Manufactured under license from Dolby Laboratories. Dolby, Dolby Vision, Dolby Vision IQ, Dolby Audio, Dolby Atmos, and the double-D symbol are trademarks of Dolby Laboratories Licensing Corporation.

For DTS patents, see *http://patents.dts.com*. Manufactured under license from DTS Licensing Limited. DTS, the Symbol, & DTS and the Symbol together, DTS 2.0 Channel, DTS 2.0+Digital Out, DTS-HD, and DTS Virtual:X are registered trademarks or trademarks of DTS, Inc. in the United States and/or other countries. © DTS, Inc. All Rights Reserved.





The model and serial number of the product are located on the back and on one side of the product. Record them below in case you ever need service.

MODEL

SERIAL NO.

Temporary noise is normal when powering ON or OFF this device.