LG

MFL72063756 2403REV07

43UT80* 75UT80*
50UT80* 86UT80* 65UT75*
55UT80* 43UT75* 70UT75*
65UT80* 50UT75* 75UT75*
70UT80* 55UT75* 86UT75*

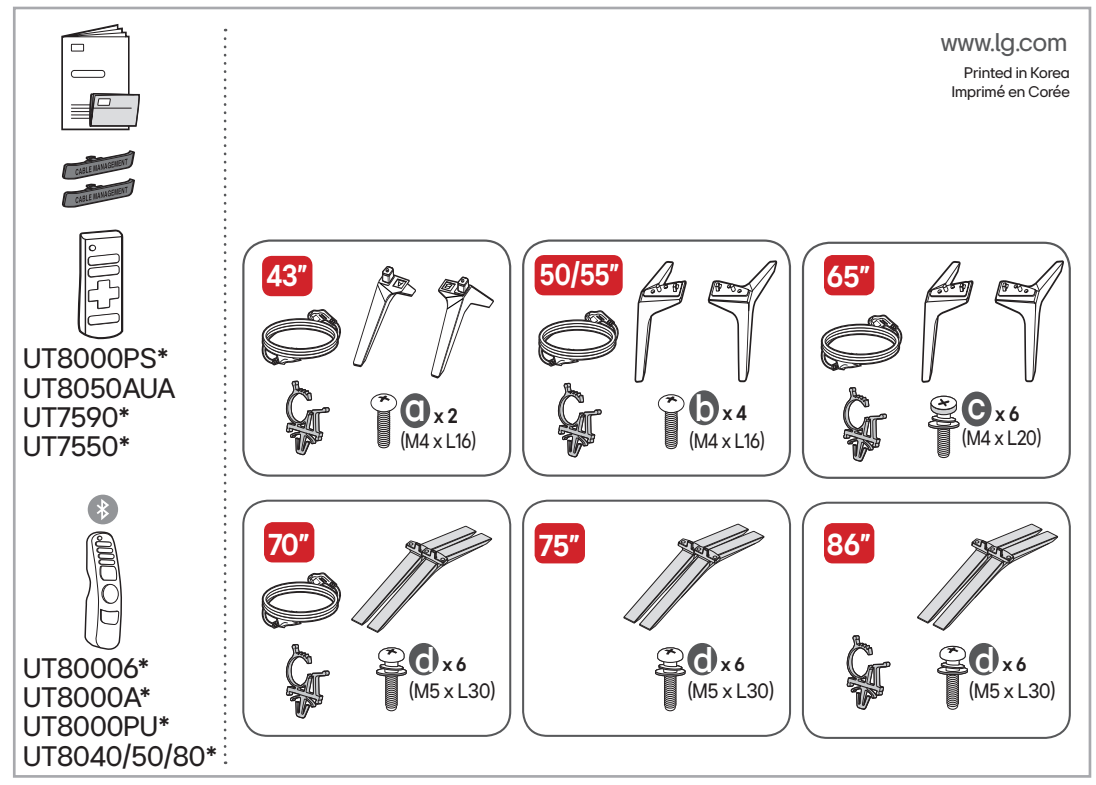

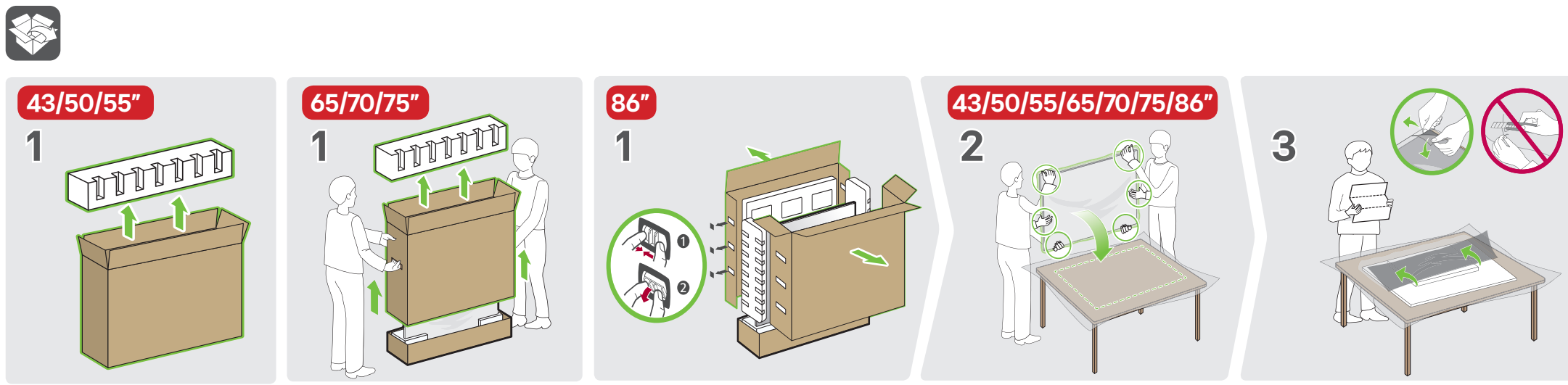

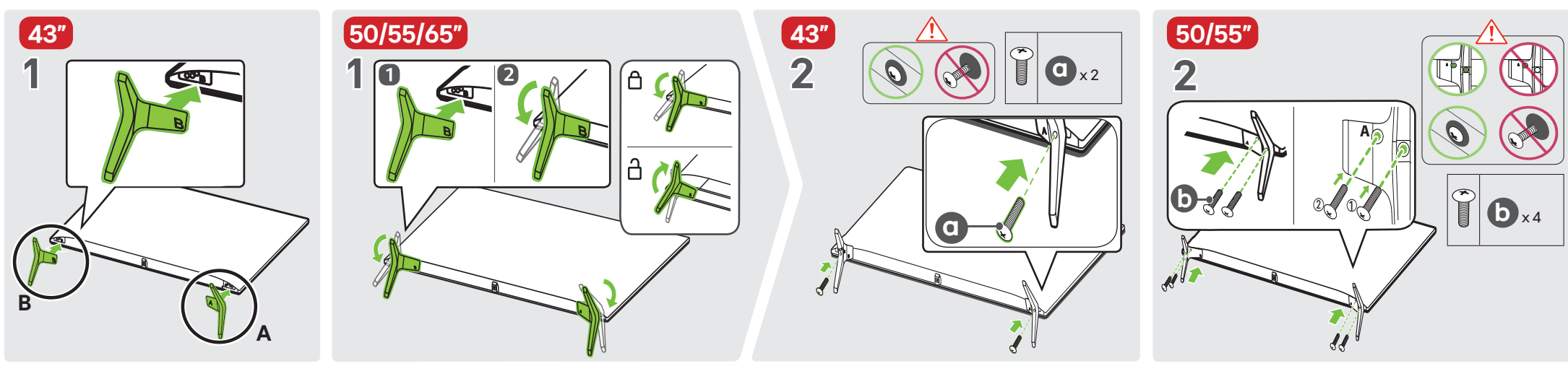

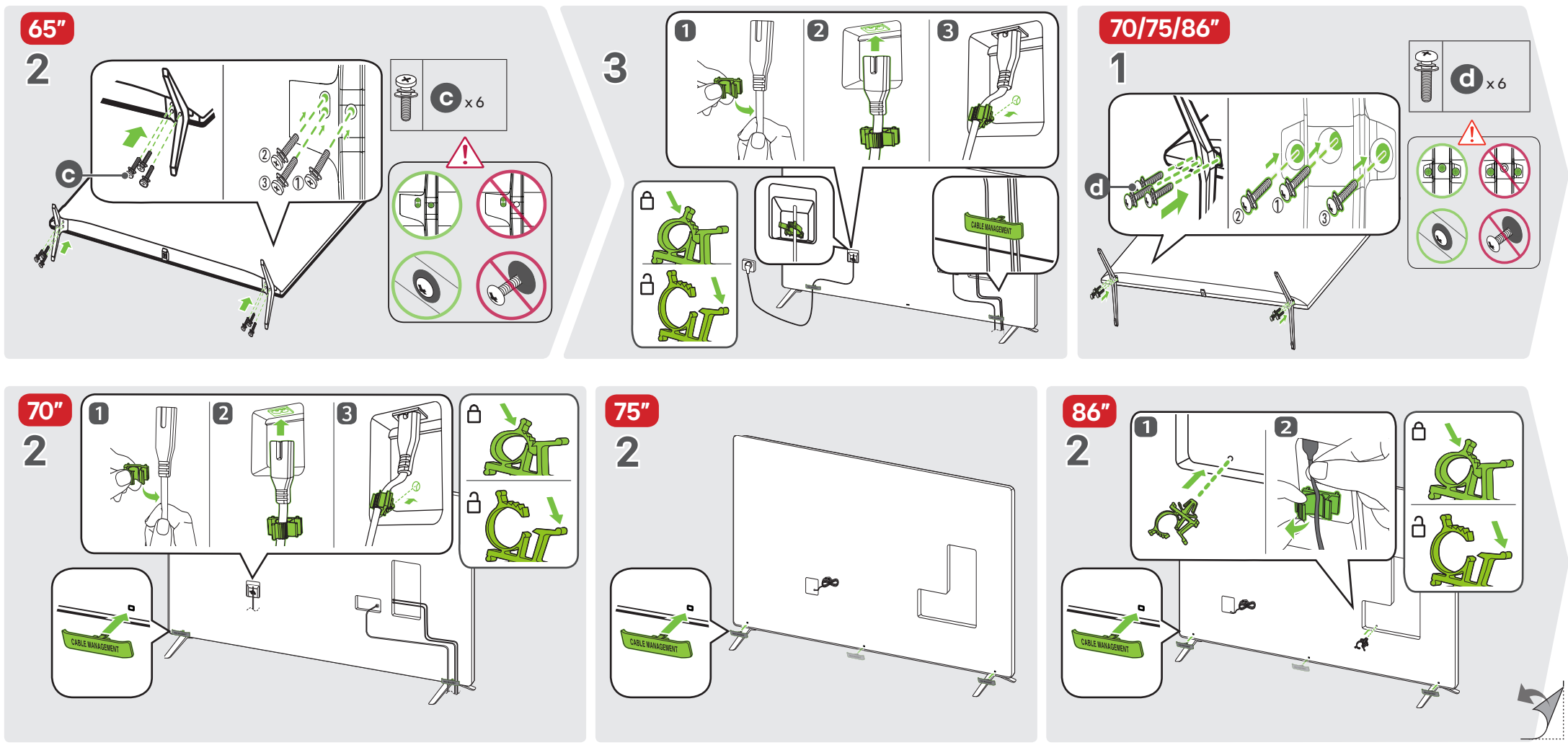

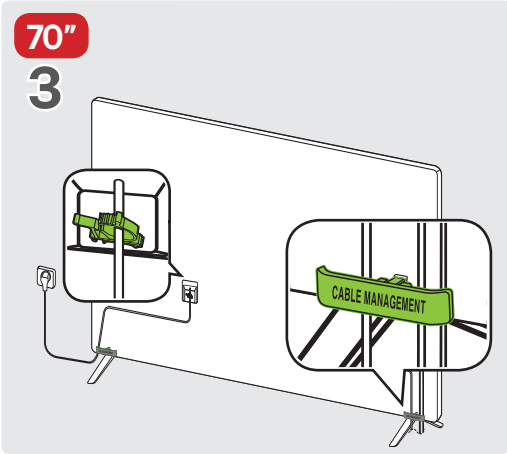

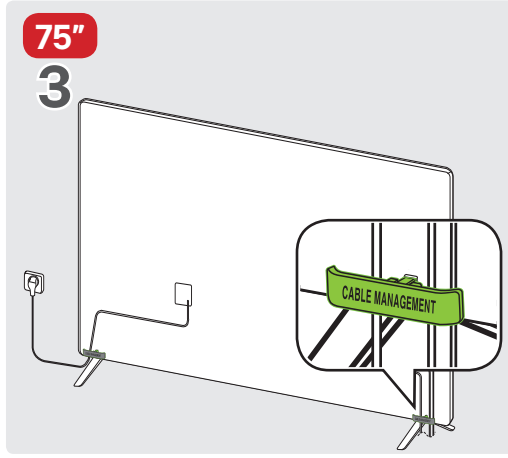

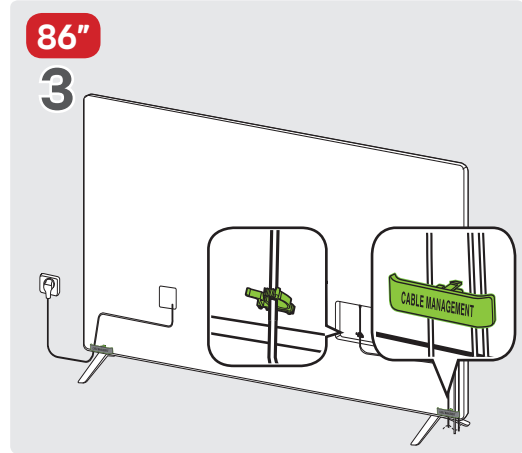

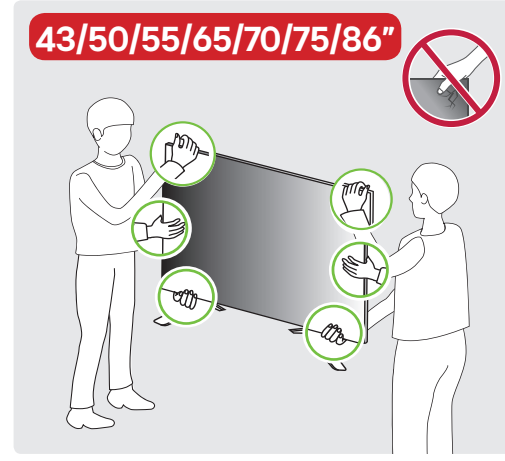

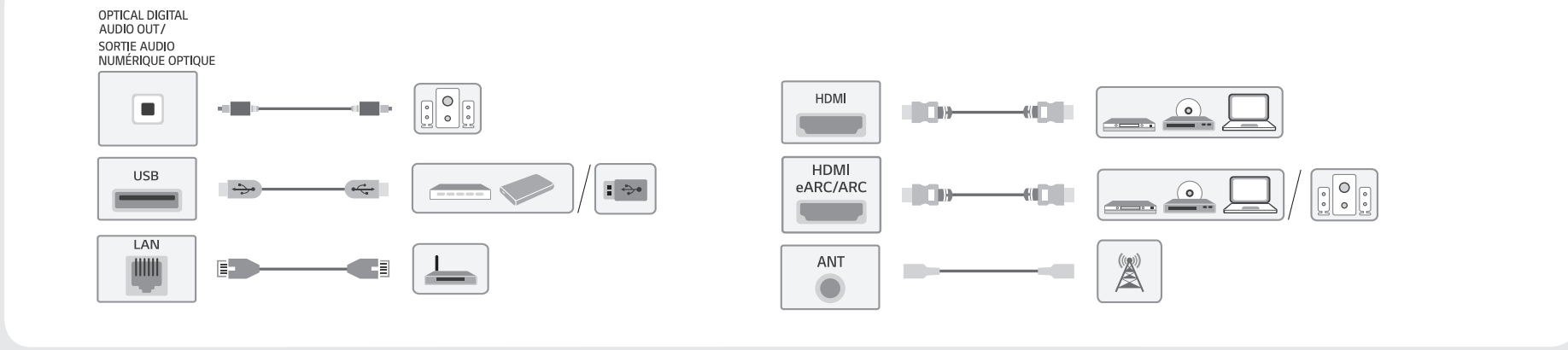

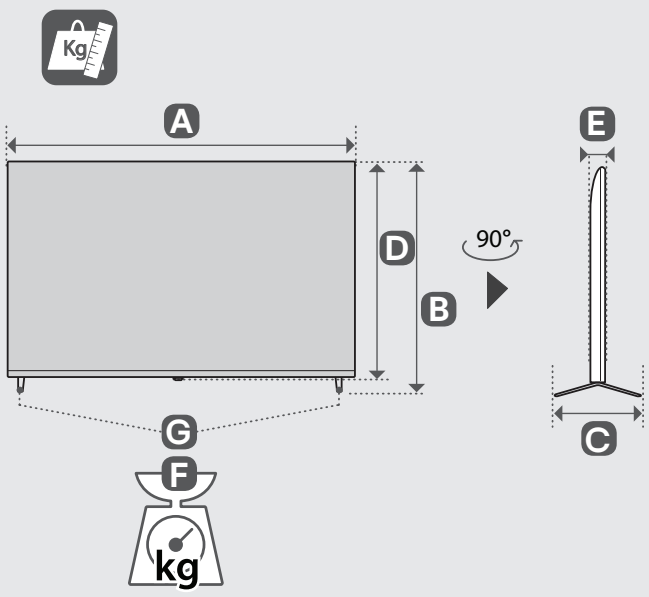

mm (inches / pulgadas / po)
kg (lbs / libras / lb)

	A	B	C	D	E	F	F-G	
43UT75* 43UT80*	967 mm (38.0) inches	621 mm (24.4) inches	216 mm (8.5) inches	564 mm (22.2) inches	57.1 mm (2.2) inches	8.9 kg (19.6) lbs	8.8 kg (19.4) lbs	115 W
50UT75* 50UT80*	1 121 mm (44.1) inches	713 mm (28.0) inches	231 mm (9.0) inches	651 mm (25.6) inches	57.1 mm (2.2) inches	11.9 kg (26.2) lbs	11.7 kg (25.7) lbs	135 W
55UT75* 55UT80*	1 235 mm (48.6) inches	776 mm (30.5) inches	231 mm (9.0) inches	715 mm (28.1) inches	57.5 mm (2.2) inches	14.2 kg (31.3) lbs	14.0 kg (30.8) lbs	150 W
65UT75* 65UT80*	1 454 mm (57.2) inches	906 mm (35.6) inches	269 mm (10.5) inches	838 mm (32.9) inches	57.7 mm (2.2) inches	21.7 kg (47.8) lbs	21.4 kg (47.1) lbs	190 W
70UT75* 70UT80*	1 562 mm (61.4) inches	972 mm (38.2) inches	361 mm (14.2) inches	907 mm (35.7) inches	59.9 mm (2.3) inches	28.1 kg (61.9) lbs	27.7 kg (61.0) lbs	205 W
75UT75* 75UT80*	1 678 mm (66.0) inches	1 027 mm (40.4) inches	361 mm (14.2) inches	964 mm (37.9) inches	59.9 mm (2.3) inches	31.8 kg (70.1) lbs	31.4 kg (69.2) lbs	230 W
86UT75* 86UT80*	1 927 mm (75.8) inches	1 167 mm (45.9) inches	362 mm (14.2) inches	1 104 mm (43.4) inches	59.9 mm (2.3) inches	45.9 kg (101.1) lbs	45.2 kg (99.6) lbs	305 W

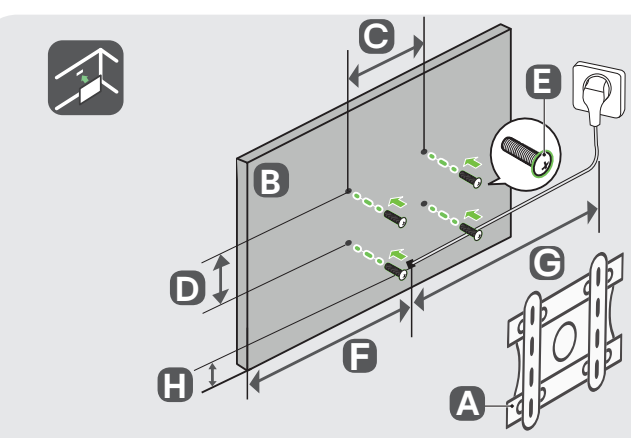

mm (inches / pulgadas / po)

A	B	C x D	E	F	G	H
LSW240B MSW240	43UT75* 43UT80*	200 x 200 mm (7.8 x 7.8) inches	M6	306 mm (12.0) inches	≧1.5 m (59.0) inches	214 mm (8.4) inches
	50UT75* 50UT80*			384 mm (15.1) inches		254 mm (10.0) inches
WB24GCB MSW240	55UT75* 55UT80*	300 x 300 mm (11.8 x 11.8) inches		371 mm (14.6) inches		230 mm (9.0) inches
WB24GCB	65UT75* 65UT80*	300 x 300 mm (11.8 x 11.8) inches		480 mm (18.8) inches		240 mm (9.4) inches
WB24GCB	70UT75* 70UT80*	400 x 400 mm (15.7 x 15.7) inches		485 mm (19.0) inches		275 mm (10.8) inches
	75UT75* 75UT80*			559 mm (22.0) inches		212 mm (8.3) inches
WB24GDB	86UT75* 86UT80*	600 x 400 mm (23.6 x 15.7) inches	M8	599 mm (23.5) inches		215 mm (8.4) inches

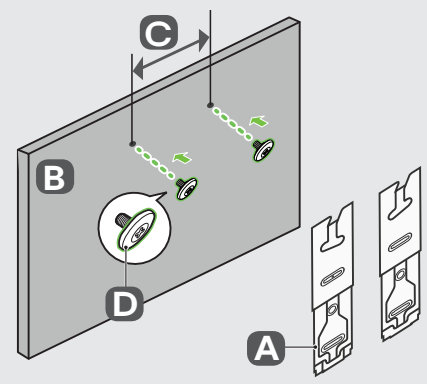

mm (inches / pulgadas / po)

A	B	C	D
WB21LMB	43/50UT75* 43/50UT80*	200 mm (7.8) inches	M6
	55/65UT75* 55/65UT80*	300 mm (11.8) inches	
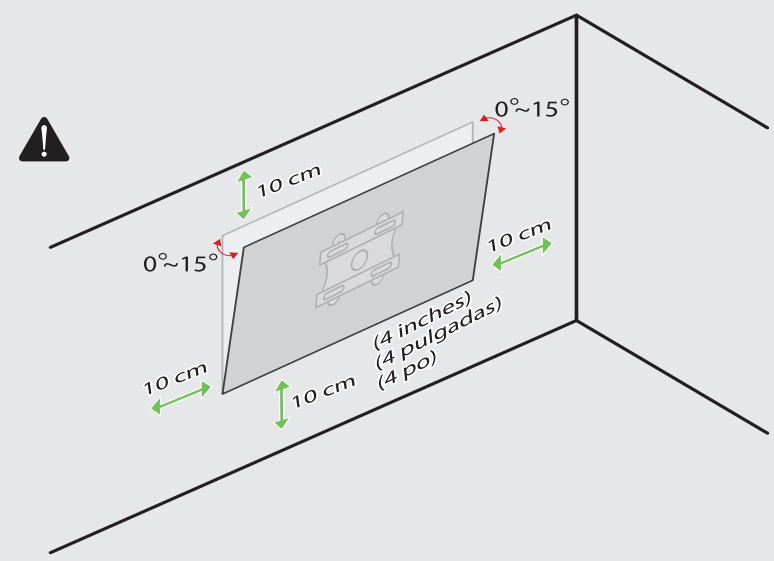
* : 0~9, A~Z