LG

MFL72140023250 2REV01

43QNED82A*
50QNED82A*
55QNED82A*
55QNED8ZA*
65QNED82A*
65QNED8ZA*
75QNED82A*
75QNED8ZA*
86QNED82A*

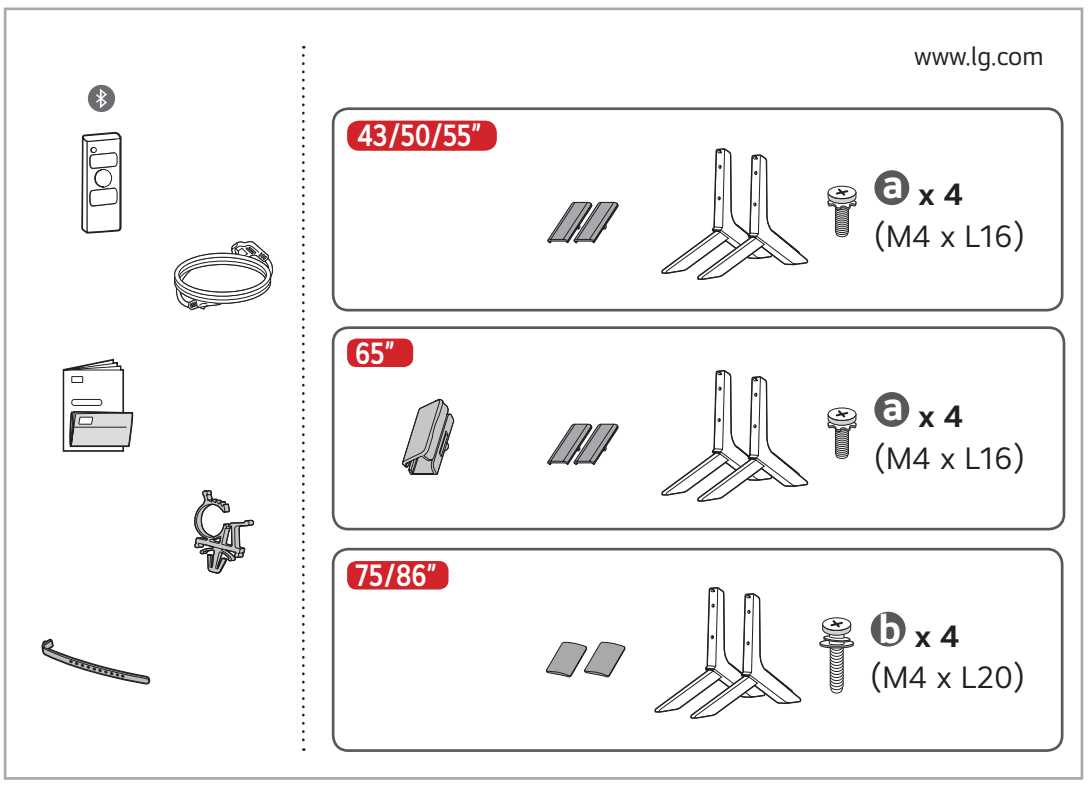

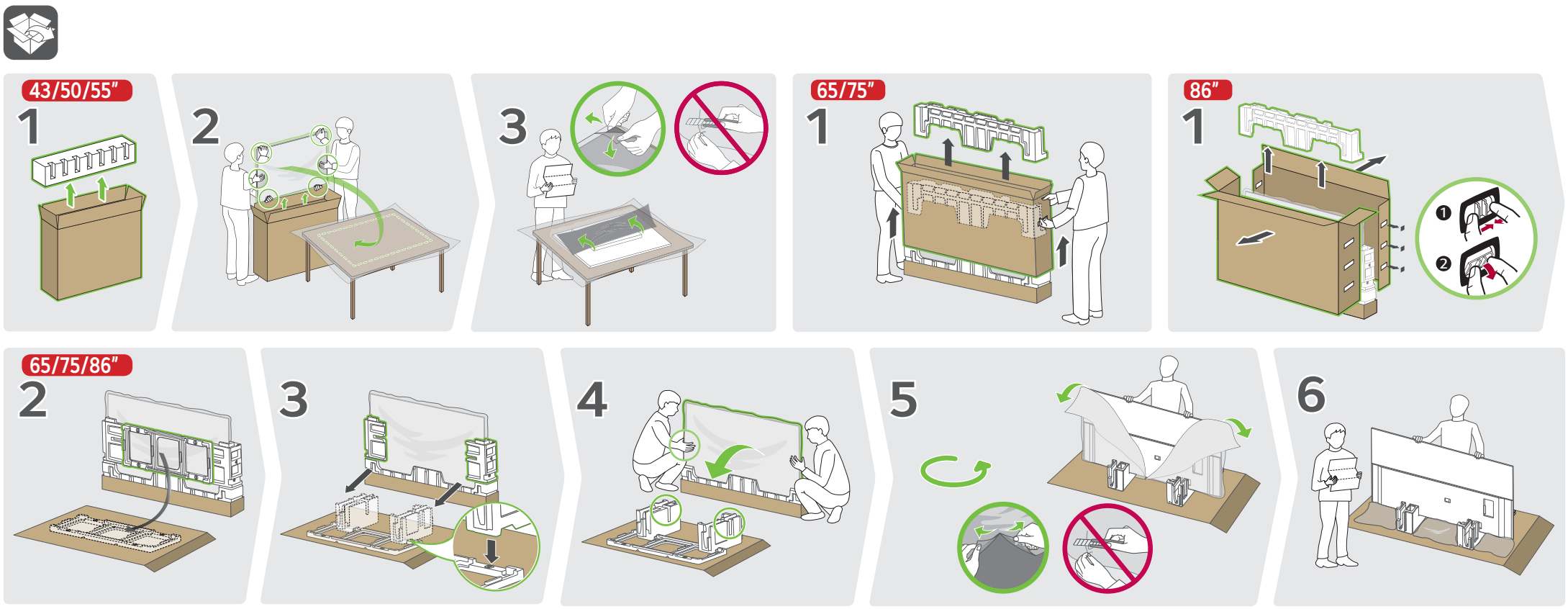

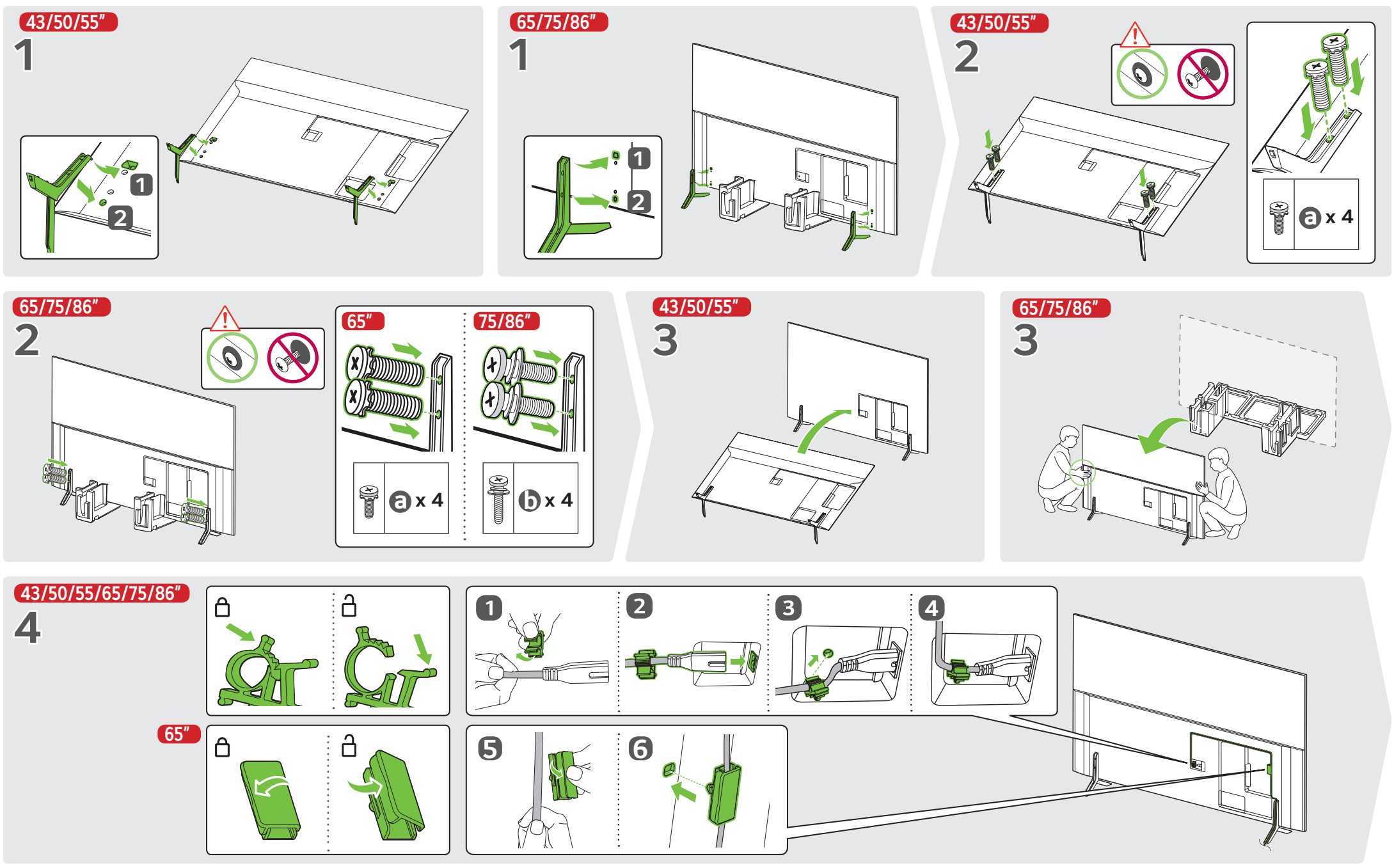

5

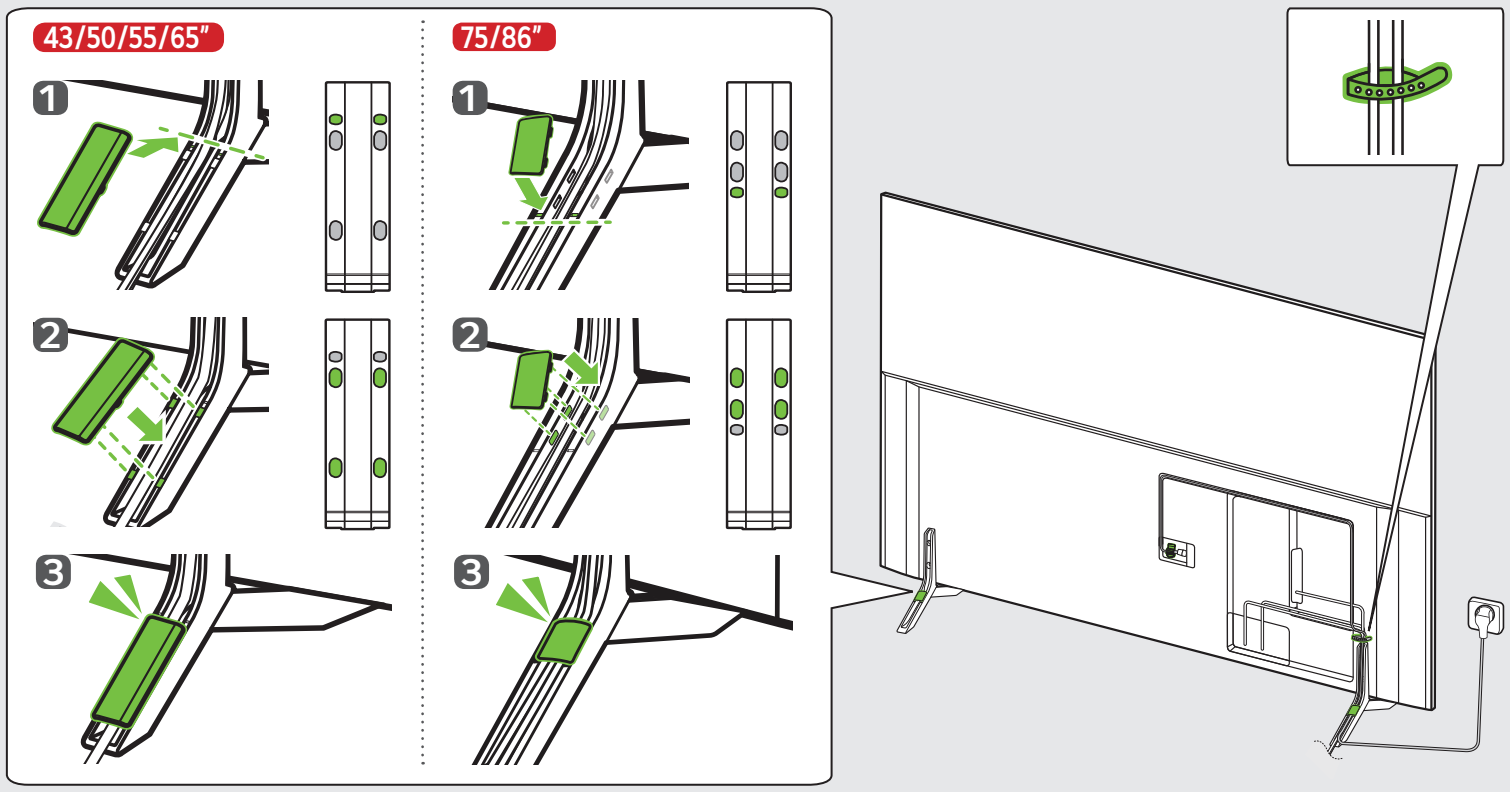

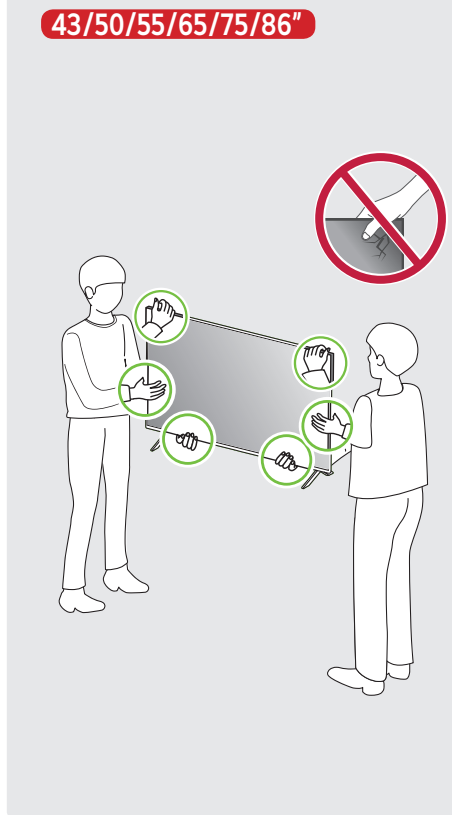

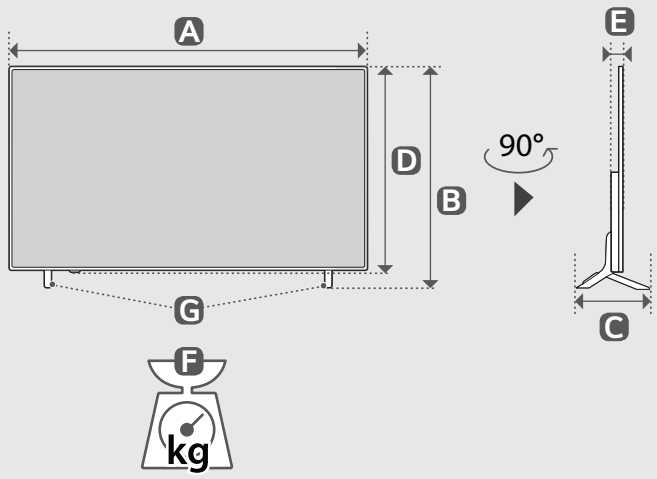

	A	B	C	D	E	F	F - G
	(mm)					(kg)	
43QNED82A*	969	634	257	567	49.9	9.8	9.4
50QNED82A*	1124	721	257	654	49.9	12.6	12.2
55QNED82A* 55QNED8ZA*	1237	784	257	717	49.9	16.1	15.7
65QNED82A* 65QNED8ZA*	1456	906	295	841	49.9	23.2	22.8
75QNED82A* 75QNED8ZA*	1677	1032	359	966	51.6	32.4	31.4
86QNED82A*	1929	1174	359	1108	51.9	46.5	45.5

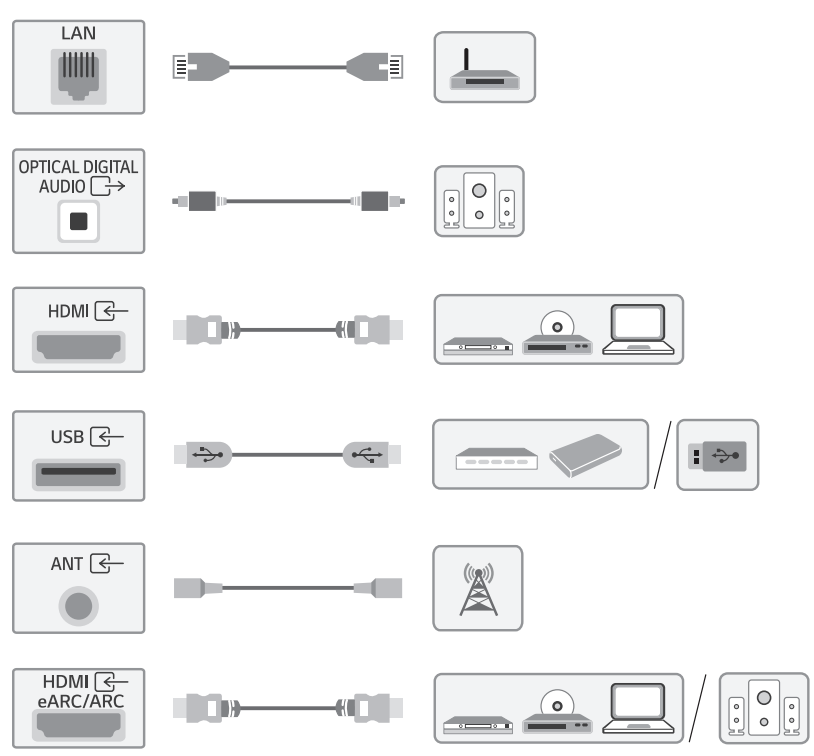

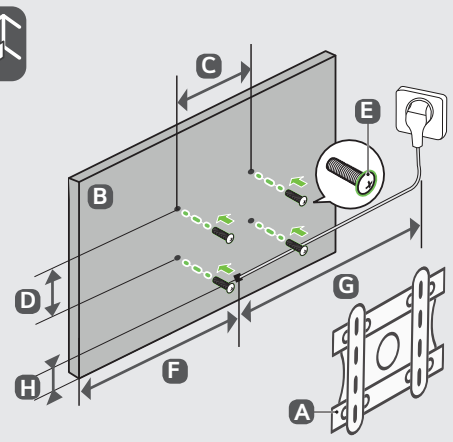

A	B	C × D (mm)	E	F (mm)	G (m)	H (mm)
LSW240B MSW240	43QNED82A*	200 x 200	M6	512	≧ 1.5	247
	50QNED82A*			588		247
OLW480B MSW240	55QNED82A* 55QNED8ZA*	300 x 200		742		249
	65QNED82A* 65QNED8ZA*			851		249
	75QNED82A* 75QNED8ZA*			962		253
WB24GDD	86QNED82A*	600 x 400	M8	1160		405

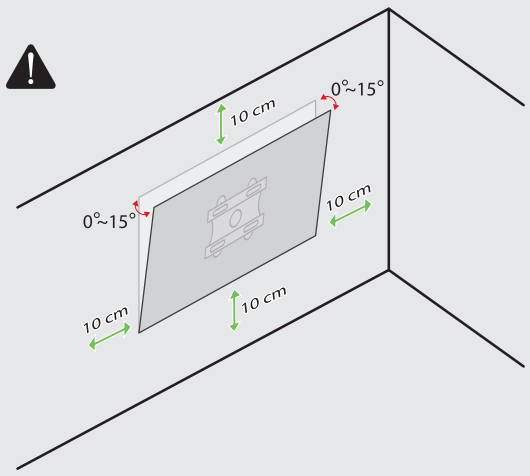

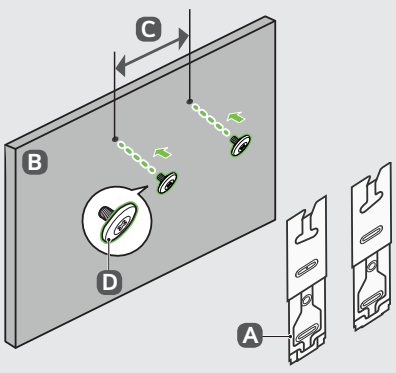

A	B	C (mm)	D
WB21LMB	43QNED82A* 50QNED82A*	200	M6

* : 0~9, A~Z