OWNER'S MANUAL

HIGH POWER SPEAKER SYSTEM

Please read this manual carefully before operating your set and retain it for future reference.

MODEL

RNC5

2301_Rev01

www.lg.com

Copyright © 2023 LG Electronics Inc. All Rights Reserved.

Safety Information

CAUTION: TO REDUCE THE RISK OF ELECTRIC SHOCK DO NOT REMOVE COVER (OR BACK) NO USER-SERVICEABLE PARTS INSIDE REFER SERVICING TO QUALIFIED SERVICE PERSONNEL.

This lightning flash with arrowhead symbol within an equilateral triangle is intended to alert the user to the presence of uninsulated dangerous voltage within the product's enclosure that may be of sufficient magnitude to constitute a risk of electric shock to persons.

The exclamation point within an equilateral triangle is intended to alert the user to the presence of important operating and maintenance (servicing) instructions in the literature accompanying the product.

WARNING: TO PREVENT FIRE OR ELECTRIC SHOCK HAZARD, DO NOT EXPOSE THIS PRODUCT TO RAIN OR MOISTURE.

CAUTION: The apparatus should not be exposed to water (dripping or splashing) and no objects filled with liquids, such as vases, should be placed on the apparatus.

WARNING: Do not install this equipment in a confined space such as a book case or similar unit.

CAUTION: Do not use high voltage products around this product. (ex. Electrical swatter) This product may malfunction due to electrical shock.

CAUTION: Do not block any ventilation openings. Install in accordance with the manufacturer's instructions.
Slots and openings in the cabinet are provided for ventilation and to ensure reliable operation of the product and to protect it from over heating. The openings should never be blocked by placing the product on a bed, sofa, rug or other similar surface. This product should not be placed in a built-in installation such as a bookcase or rack unless proper ventilation is provided or the manufacturer's instruction has been adhered to.

NOTICE: For safety marking information including product identification and supply ratings, please refer to the main label on the bottom or the other surface of the product.

CAUTION concerning the Power Cord

The Power Plug is the disconnecting device. In case of an emergency, the Power Plug must remain readily accessible.

Check the specification page of this owner's manual to be certain of the current requirements.

Do not overload wall outlets. Overloaded wall outlets, loose or damaged wall outlets, extension cords, frayed power cords, or damaged or cracked wire insulation are dangerous. Any of these conditions could result in electric shock or fire. Periodically examine the cord of your device, and if its appearance indicates damage or deterioration, unplug it, discontinue use of the device, and have the cord replaced with an exact replacement part by an authorized service center. Protect the power cord from physical or mechanical abuse, such as being twisted, kinked, pinched, closed in a door, or walked upon. Pay particular attention to plugs, wall outlets, and the point where the cord exits the device.

CAUTION: Be careful to make sure children do not put their hands or any objects into the *speaker duct.

* speaker duct: A hole for plentiful bass sound on speaker cabinet. (enclosure)

CAUTION: No naked flame sources, such as lighted candles, should be placed on the apparatus.

Symbols

~	Refers to alternating current (AC).
⎓	Refers to direct current (DC).
⧈	Refers to class II equipment.
⏻	Refers to stand-by.
I	Refers to "ON" (power).
ϟ	Refers to dangerous voltage.

Table of Contents

1 Getting Started

2 Safety Information
6 Unique Features
7 Playable file Requirement
7 – Music file requirement
7 – Compatible USB Devices
7 – USB device requirement
8 Remote control
10 Top panel
12 Front panel / Rear panel

2 Connecting

14 AC Power Cord Connection
15 Optional Equipment Connection
15 – USB Connection
15 – Antenna Connection

3 Operating

16 Basic Operations
16 – USB Operations
17 – Selecting a folder and an MP3/WMA file
18 – Deleting a file/folder or format
19 Playback Effect
19 – AUTO DJ
19 – DJ PAD
20 Using BLUETOOTH® wireless technology
20 – Listening to music stored on the Bluetooth devices
23 Using the LG XBOOM App
23 – About "LG XBOOM" App
23 – Install "LG XBOOM" App onto Your Bluetooth Device
24 – Activate Bluetooth with "LG XBOOM" App
25 Radio Operations
25 – Listening to the radio
25 – Improving poor FM reception
25 – Presetting the Radio Stations
25 – Deleting all the saved stations
26 Sound adjustment
26 – Setting the sound mode
26 – Setting the USER EQ
27 Advanced Operations
27 – Recording to USB
29 – JUKEBOX Playback

30 Other Operations
30 – Turn off the sound temporarily
30 – CHILDSAFE Mode
30 – DEMO
31 – Using Guitar
31 – Using Microphone
34 – LIGHTING
34 – Sleep Timer Setting
34 – Dimmer
35 – AUTO POWER On
36 – Auto function change
37 Setting the Clock
37 – Setting the Clock through "LG XBOOM" App
37 – Using your unit as an alarm clock
38 LG Sound Sync
39 WIRELESS PARTY LINK Connection

4 Troubleshooting

40 Troubleshooting
40 – General
41 – NOTES to release Demo mode

5 Appendix

42 General specifications
43 Trademarks and licenses
44 Maintenance
44 – Handling the Unit

Unique Features

BLUETOOTH®

Listens to music stored on your **Bluetooth** device.

Playback effects

Listens to music with various sound and playback effects.

USB Direct Recording

Records music to your USB device.

LG XBOOM

LG XBOOM is an app designed to let you take control of some of LG's latest audio devices. (Page 23-24)

LG Sound Sync

Controls volume level of this unit by the remote control of your LG TV that is compatible with LG Sound Sync.

Playable file Requirement

Music file requirement

MP3/WMA file compatibility with this unit is limited as follows.

- Sampling frequency: within 32 to 48 kHz (MP3), within 32 to 48 kHz (WMA)
- Bit rate: within 32 to 320 kbps (MP3), 40 to 192 kbps (WMA)
- Maximum files: 2,000
- Maximum folders: 200
- File extensions: ".mp3"/ ".wma"
- Certain MP3/WMA files may not be played depending on the type or format of the file.

Compatible USB Devices

- MP3 Player: Flash type MP3 player.
- USB Flash Drive:
  Devices that support USB2.0 or USB1.1.
- The USB function of this unit does not support all USB devices.

USB device requirement

- Devices which require additional program installation when you have connected it to a computer, are not supported.
- Do not extract the USB device while in operation.
- For a large capacity USB, it may take longer than a few minute to be searched.
- To prevent data loss, back up all data.
- If you use a USB extension cable or USB hub, the USB device is not recognized.
- Using NTFS file system is not supported. (Only FAT(16/ 32) file system is supported.)
- This unit recognizes up to 2,000 files.
- External HDD, Card readers, Locked devices, or hard type USB devices are not supported.
- USB port of the unit cannot be connected to PC. The unit cannot be used as a storage device.
- Some USB may not work with this unit.

Remote control

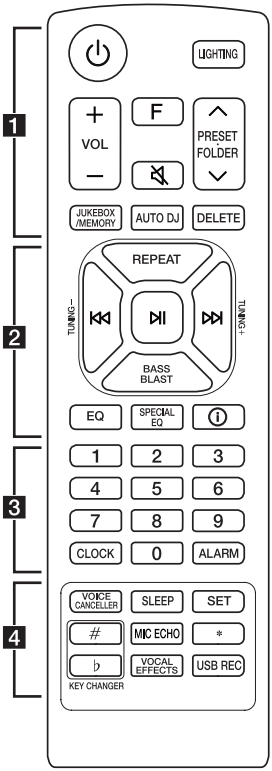

Replacement of battery

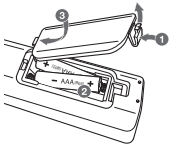

Remove the battery cover on the rear of the remote control, and insert the battery with ⊕ and ⊖ matched correctly.

Due to the environment government regulations about import and batteries destruction in Colombia, this model will not bring the batteries of remote control included.

1

⏻ (Standby): Turns the power on or off.

LIGHTING: Selects the lighting mode.

VOL (Volume) **+/-**: Adjusts speaker volume.

F (Function): Selects the function and input source.

Input source / Function	Display
USB	USB1 / USB2
Bluetooth	BT
LG Sound Sync (Wireless)	LG TV
Radio	FM

🔇 (Mute): Mutes the sound.

PRESET·FOLDER ∧/∨:

- Chooses a preset number for a radio station. (Page 25)
- Searches for a folder of MP3/WMA files. When a USB containing MP3/WMA files in several folders is being played, press **PRESET·FOLDER ∧/∨** to select the folder you want to play.

JUKEBOX/MEMORY:

- Stores radio stations. (Page 25)
- Selects JUKEBOX mode. (Page 29)
- Makes JUKEBOX list.

AUTO DJ: Selects the AUTO DJ mode. (Page 19)

DELETE:

- Deletes MP3/WMA files. (USB only). (Page 18)
- Deletes a song on the JUKEBOX list.
- Deletes all the saved stations.

2

REPEAT: Listens to your files repeatedly or randomly.

TUNING-/+: Selects the radio stations.

⏮/⏭ (Skip/Search):

- Skips backward or forward.
- Searches for a section within a file.

⏯ (Play/Pause):

- Starts or pauses playback.
- Selects stereo/mono.
- **Bluetooth** connection lock (BT LOCK): Select the **Bluetooth** function by pressing **F** repeatedly. And long press ⏯ to limit **Bluetooth** connection to only BT and LG TV.

BASS BLAST (or **BASS BLAST+**): Selects BASS (or BASS+) effect directly.

EQ: Chooses sound impressions.

SPECIAL EQ: Chooses special equalizer.

ⓘ (Information):

- Sees information about your music. An MP3 file often come with ID3 tag. The tag gives the Title, Artist, Album or Time information.
- Sees **Bluetooth** device name of the unit in BT READY.
- Sees the name of connected all **Bluetooth** device in **Bluetooth** mode.
- When these units are successfully connected each other in WIRELESS PARTY LINK mode, each of connected device names appears in the each unit.

3

0 to **9** numerical buttons: Selects numbered files or preset number.

CLOCK: Sets a clock and checks a time.

ALARM: With the ALARM function you can turn on USB play and tuner reception at a desired time.

4

VOICE CANCELLER: You can reduce the vocal tones during music playback from various input sources.

SLEEP: Sets the system to turn off automatically at a specified time.
(Dimmer: The display window will be darkened by half.)

SET: Confirms the setting.

KEY CHANGER (#/♭): Changes the key to suit your vocal range.

MIC (Microphone) **ECHO**: Selects ECHO mode.

✱: This button is not available.

VOCAL EFFECTS: Selects various vocal effects mode.

USB REC:

- Records to USB.
- Stops recording.

Top panel

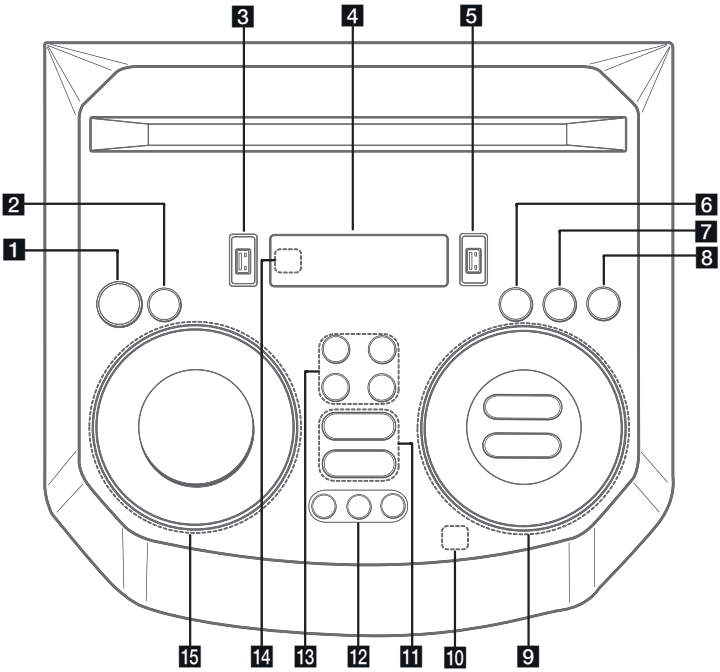

1 ⏻ (Standby)
Turns the power on or off.

2 **USB REC / DEMO**
- Records to USB.
- Stops recording.
- In power off status, if you press **USB REC / DEMO**, show demo mode.

3 USB 1 Port
You can play sound files by connecting the USB device.

4 Display window

5 USB 2 Port
You can play sound files by connecting the USB device.

6 **F** (Function)
Selects the function and input source.

Input source / Function	Display
USB	USB1 / USB2
Bluetooth	BT
LG Sound Sync (Wireless)	LG TV
Radio	FM

7 LIGHTING
Selects the lighting mode.

8 TWIN
Connects two units for TWIN mode in WIRELESS PARTY LINK.

9 ⏮/⏭ (Skip/Search)
- Skips backward or forward.
- Searches for a section within a file.
- Selects the radio stations.

⏯ (Play/Pause)
- Starts or pauses playback.
- Selects stereo/mono.
- **Bluetooth** connection lock (BT LOCK): Select the **Bluetooth** function by pressing **F** repeatedly. And long press ⏯ to limit **Bluetooth** connection to only BT and LG TV.

AUTO DJ
Selects the AUTO DJ mode.

VOL (Volume) **-/+**
Adjusts speaker volume.

MIC (Microphone) **/ GUITAR -/+**
Adjusts Microphone volume or Guitar volume.

10 (Auto Music Play)
Plays the audio currently playing by tagging the mobile (with "LG XBOOM" App) to this unit. (Android Only)

11 VOICE CANCELLER
You can reduce the vocal tones during music playback from various input sources.

EQ
Chooses sound impressions.

12 CLUB, DRUM, USER (DJ PAD)
Selects CLUB, DRUM or USER sound effect to mix.
(If you want to use USER, you have to register a source with "LG XBOOM" app.(Android Only))

1, 2, 3 (DJ PAD)
Press a desired sound pad.

13 MIC (Microphone) **ECHO**
Selects ECHO mode.

VOCAL EFFECTS
Selects various vocal effects mode.

KEY CHANGER (♭/#)
Changes the key to suit your vocal range.

14 Remote sensor

15 SPECIAL EQ / BASS BLAST (or **BASS BLAST+**)
- Chooses special equalizer.
- Press and hold to select BASS (or BASS+) effect directly.

SEARCH
Moves to folder or file in selection mode.

OK
Selects a folder when searching a file.

USER EQ
Selects the equalizer created by your own.

Multi jog
- Searches a folder or a file.
- Turns clockwise or counterclockwise to control the USER EQ level.
- Chooses special equalizer.

Front panel / Rear panel

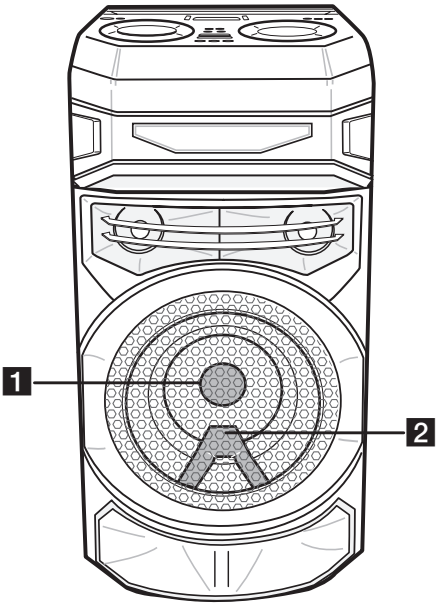

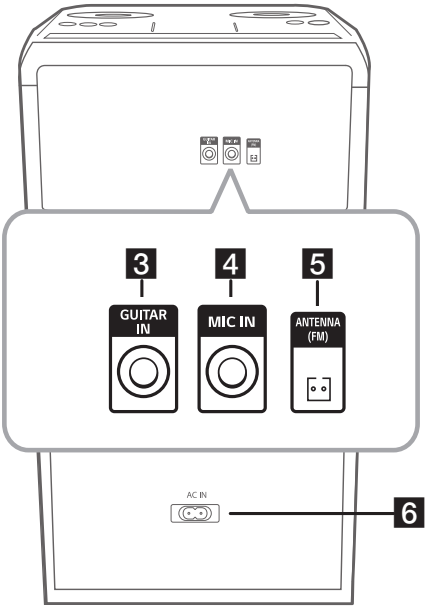

1 Lighting

2 Remote sensor

Caution

Place the unit at a safe distance from the child's reach. Otherwise it may result in the unit falling down and causing personal injury and/or property damage.

3 **GUITAR IN**: Connect a guitar.

4 **MIC** (Microphone) **IN**: Connect a microphone.

5 **ANTENNA** (FM)

6 **AC IN** socket

Caution

- Connect the power cord to wall outlet directly if possible. Or when you use an extension cable, it is highly recommended to use an extension cable of 110 V / 15 A or 230 V / 15 A, otherwise the unit may not operate properly because of the lack of power supply.
- Do not overload the extension cord with excessive electrical load.

Useful functions for using the unit

Function	Description	To do	Do this
BT Lock On/Off (Page 22)	It allows you to connect a **Bluetooth** device only on BT (**Bluetooth**) and LG TV functions. Initial setting of this function was set to off.	ON	Press and hold ▷II for 5 seconds in BT (**Bluetooth**) function.
		OFF	Press and hold ▷II for 5 seconds in BT (**Bluetooth**) function.
Auto Power On (Page 35)	It allows the unit to turn on automatically by input signals: LG TV or BT (**Bluetooth)**	ON	Turn off the unit by pressing ⏻ on the unit for 5 seconds.
		OFF	Turn off the unit by pressing ⏻ on the unit for 5 seconds.

AC Power Cord Connection

1. Connect one end of the AC power cord (included) to the **AC IN** socket.

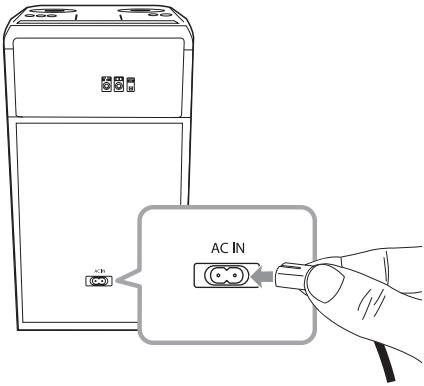

2. Plug the other end into the wall outlet.

Note

Unplug the AC power cord from the wall outlet if you do not use for an extended period of time.

Optional Equipment Connection

USB Connection

Connect a USB device (or MP3 player, etc.) to the USB ports on the unit.

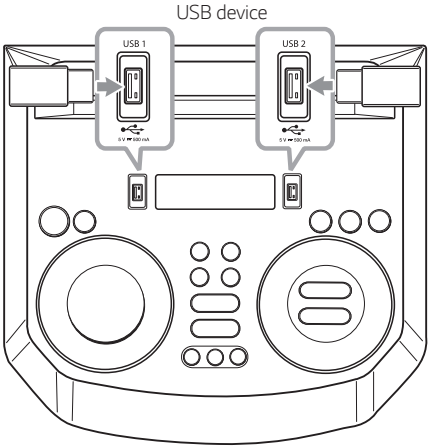

Note

Removing the USB device from the unit:

1. Choose a different function/mode.
2. Remove the USB device from the unit.

Antenna Connection

Connect the supplied FM antenna for listening to the radio.

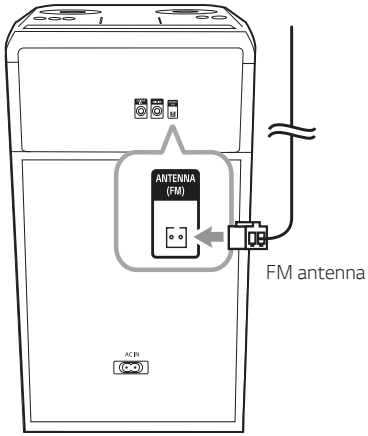

Note

Be sure to fully extend the FM wire antenna.

Basic Operations

USB Operations

1. Connect the USB device to the USB port.
2. Select USB function by pressing **F**.

To	Do this
Playback	Press ▷II.
Pause	Press ▷II during playback.
Searching for a section within a file	Press and hold ⏮/⏭ during playback and release it at the point you want to listen to.
Selecting a file directly	Press **0** to **9** numerical buttons on the remote control to go to the desired file directly.
Skipping to the next/ previous file	(1) By using ⏮/⏭ buttons: Press ⏭ to go to the next file. Playing in less than 3 seconds, press ⏮ to go to the previous file. Playing after 3 seconds, press ⏮ to go to the beginning of the file. (2) By using **SEARCH**: Rotate Multi jog or ⏮/⏭ and press ▷II to play the file.
Playing repeatedly or randomly	Press **REPEAT** on the remote control repeatedly. Refer to the note for details about the display change.

Note

- Repeat/Shuffle playback operates as follows.

On Display	Description
OFF	Plays songs in order, and stops the playback.
ONE	Plays a same song repeatedly.
FOLDER	Plays songs in a folder repeatedly.
ALL	Plays all the songs repeatedly.
SHUFFLE	Plays all the songs once randomly, and stops the playback.

- When you play JUKEBOX list, only ONE and ALL are available.
- Even after restarting the unit or switching one function to another, you can listen to music from the point where it's last been played.

Selecting a folder and an MP3/WMA file

On the unit

1. Press **SEARCH** and rotate Multi Jog or ⏮/⏭ until a desired file appears. You can also search a folder if you press **SEARCH** again.
2. Press **OK** or ⏯ to play the selected file. When you search a folder, press **OK** to select a file in the folder, then press **OK** or ⏯ again. The selected file is played.

On the remote control

1. Press **PRESET·FOLDER** ∧/∨ repeatedly until a desired folder appears.
2. Select the file you want by using ⏮/⏭.
3. Press ⏯ to play it.

Note

- USB Folders/Files are recognized as below.

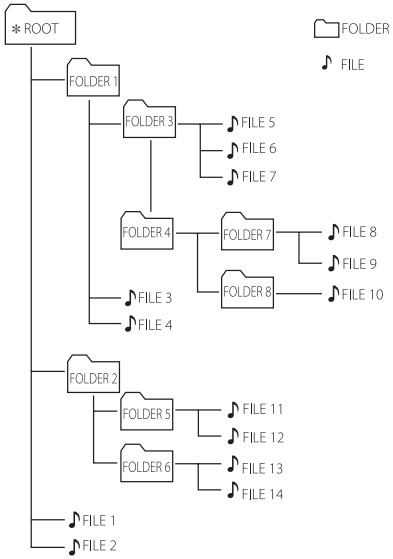

- If there is no file in a folder, the folder will not appear.
- Folders will be presented as the following order,
  ROOT → FOLDER 1 → FOLDER 3 → FOLDER 7 → FOLDER 8 → FOLDER 5 → FOLDER 6
- File will be played from ♪ file No.1 to ♪ file No.14 one by one.
- Files and folders will be presented in order recorded and may be presented differently according to the record circumstances.

*ROOT: The first screen you can see when a computer recognize the USB is "ROOT".

Deleting a file/folder or format

You can delete file, folder on your USB or format the USB.

1. Select USB function by pressing **F**.
2. Press **DELETE** on the remote control repeatedly, the display changes as followings.
   DEL FILE → DEL DIR → FORMAT

On Display	Description
DEL FILE	Select the file you want to delete.
DEL DIR	Select the folder you want to delete.
FORMAT	Select to format the USB device.

   If you want to exit the current mode, press **DELETE** on the remote control repeatedly until "FORMAT" appears, and then press **DELETE** on the remote control once again.
3. To delete file/folder or format, press and hold **DELETE** on the remote control.

Caution

- Do not extract the USB device during operation. (play, delete, etc.)
- Regular back up is recommended to prevent data loss.
- The delete function may not be supported according to the USB status. (lock, etc.)

Playback Effect

The unit supports various sound and playback effects: AUTO DJ, DJ PAD.

AUTO DJ

Auto DJ blends the end of one song into the beginning of another for seamless playback. It equalizes volume across files for uninterrupted playback.

Press **AUTO DJ** repeatedly, the display changes as followings.

SHUFFLE → SEQUENTIAL → OFF

On Display	Description
OFF	-
SHUFFLE	The music is played randomly on this mode.
SEQUENTIAL	The music is played repeatedly on this mode.

Note

- AUTO DJ mode does not support searching for a section within a file or to play repeatedly or randomly.
- If you move to other functions on AUTO DJ mode, AUTO DJ will be disabled.
- AUTO DJ is not supported in the music file whose length is less than 60 seconds.
- Only SEQUENTIAL is selected when played JUKEBOX list.

DJ PAD

It allows you to mix CLUB, DRUM or USER sound effect. Each mode has up to 3 sounds effect.

1. Press and hold **DJ PAD (CLUB, DRUM or USER)** on the unit to select a desired DJ PAD sound effect.
2. Press a **DJ PAD (1, 2, 3)** of desired sound on the unit.

Note

- If you want to use USER, you have to register a source with "LG XBOOM" app.(Android Only)
  If the source is not register to USER, "EMPTY" or "NO SOUND" appears on the display window.
- Initial DJ PAD mode is CLUB sound effect.
- DJ PAD mode is displayed for 3 seconds when you press **DJ PAD (CLUB, DRUM or USER)** on the unit.
- The DJ PAD sound is mixed when you press a **DJ PAD (1, 2, 3)** on the unit.
- The currently playing DJ PAD sound is stopped and the selected DJ PAD sound outputs if you press a different **DJ PAD (1, 2, 3)** on the unit while DJ PAD sound is playing.

Using BLUETOOTH® wireless technology

About Bluetooth

Bluetooth is wireless communication technology for short range connection.

The sound may be interrupted when the connection interfered by the other electronic wave or you connect the **Bluetooth** in the other rooms.

Connecting individual devices under **Bluetooth** wireless technology does not incur any charges.
A mobile phone with **Bluetooth** wireless technology can be operated via the Cascade if the connection was made via **Bluetooth** wireless technology.

- Available Devices: Smart phone, MP3, Notebook, etc.
- Version: 4.0
- Codec: SBC, AAC

Bluetooth Profiles

In order to use **Bluetooth** wireless technology, devices must be able to interpret certain profiles. This unit is compatible with following profile.

A2DP (Advanced Audio Distribution Profile)

Listening to music stored on the Bluetooth devices

Pairing your unit and Bluetooth device

Before you start the pairing procedure, make sure the **Bluetooth** feature is activated on your **Bluetooth** device. Refer to your **Bluetooth** device's user guide. Once a pairing operation is performed, it does not need to be performed again.

1. Turn on the unit.

Note

When Bluetooth connection lock is activated, you can search **Bluetooth** device in BT function.

2. Operate the **Bluetooth** device and perform the pairing operation. When searching for this unit with the **Bluetooth** device, a list of the devices found may appear in the **Bluetooth** device display depending on the type of **Bluetooth** device. Your unit appears as "LG RNC5 (XX)".

Note

- XX means the last two digits of **Bluetooth** address. For example, if your unit has a **Bluetooth** address such as 9C:02:98:4A:F7:08, you will see "LG RNC5 (**08**)" on your **Bluetooth** device.
- Depending on the **Bluetooth** device type, some devices have a different pairing way. For details about **Bluetooth** pairing, refer to your **Bluetooth** device manual.
- You can connect this unit with up to 3 **Bluetooth** devices simultaneously using the same method as described above, only in the **Bluetooth** function.
- The multi phone pairing connection is only supported on Android devices. (Multi phone pairing connection may not be supported depending on the connected device specifications.)
- Removable/detachable **Bluetooth** devices (Ex: Dongle etc.) will not support multi phone pairing.

3. When this unit is successfully connected with your **Bluetooth** device, "PAIRED" appears on the display window and change to **Bluetooth** device name soon. Then "BT" will appear on the display window.

Note

- "PAIRED" will momentarily appear on the display when you connect other devices for multi phone pairing.
- If the device name is unavailable, "_" will be displayed.

4. Listen to music.
   To play a music stored on your **Bluetooth** device, refer to your **Bluetooth** device's user guide.

Note

- When using **Bluetooth** technology, you have to make a connection between the unit and the **Bluetooth** device as close as possible and keep the distance.
  However, it may not work well in certain situations as described below:
  - There is a obstacle between the unit and the **Bluetooth** device.
  - There is a device using same frequency with **Bluetooth** technology such as a medical equipment, a microwave or a wireless LAN device.
- If **Bluetooth** connection does not work well, try pairing it again.
- Even if this unit is connected to up to 3 **Bluetooth** devices in the **Bluetooth** mode, you can play and control music by using only one of the connected devices.

Note

- The sound may be interrupted when the connection has interference from other electronic devices.
- Depending on the type of the device, you may not be able to use the **Bluetooth** function.
- You can enjoy wireless system using phone, MP3, Notebook, etc.
- The more distance between the unit and the **Bluetooth** device, the lower the sound quality becomes.
- **Bluetooth** connection will be disconnected when the unit is turned off or the **Bluetooth** device gets too far from the unit.
- When **Bluetooth** connection is disconnected, connect the **Bluetooth** device to the unit again.
- When a **Bluetooth** device is not connected, "BT READY" appears on the display window.
- When you use the **Bluetooth** function, adjust the volume to a proper level on the **Bluetooth** device.
- When you connect **Bluetooth** device (iOS device etc.) to this unit or operate the device, the volume level can be synchronized with each other.
- **Bluetooth** connection will be disconnected when you change the **Bluetooth** function to some other function. In "LG XBOOM" app connection, only one device which you are playing keeps **Bluetooth** connection. You can control the **Bluetooth** device with this unit but you cannot use sound output.
- When entering the **Bluetooth** function, this unit automatically connects to the last connected **Bluetooth** device or the device which played back last.
  (Auto connection may not be supported depending on the connected device specifications.)

Controls connected Bluetooth device

You can control connected Bluetooth device by the unit; play, pause, skip.

Note

- Only Android OS and iOS is available to use this function.
- This function may not be supported depending on the **Bluetooth** device, or operated differently.

Bluetooth connection lock (BT LOCK)

You can limit **Bluetooth** connection to only BT (**Bluetooth**) and LG TV function to prevent unintended **Bluetooth** connections.

To turn this function on, press and hold ▷II for about 5 seconds in BT (**Bluetooth**) function.
"ON-BT LOCK" appears then you can limit **Bluetooth** connection.

To turn this function off, press and hold ▷II for about 5 seconds in BT (**Bluetooth**) function.
"OFF-BT LOCK" appears.

Note

- Even if you set up **Bluetooth** connection lock to On, this unit turns on by Auto Power function. Turn off Auto Power function to prevent it. (Page 35)
- When you turn on or off the **Bluetooth** connection lock, search and connect again using **Bluetooth** after deleting the paired list of your **Bluetooth** device.
- When you turn on the **Bluetooth** connection lock, multi phone pairing is not supported.

Using the LG XBOOM App

Note

It is recommended to use the latest version of app.

About “LG XBOOM” App

“LG XBOOM” app brings a suite of new features to this unit.

To enjoy more features, you are recommended to download and install free “LG XBOOM” app.

Install “LG XBOOM” App onto Your Bluetooth Device

There are two ways to install “LG XBOOM” App onto Your **Bluetooth** Device.

Install “LG XBOOM” App through QR code

1. Install “LG XBOOM” app through QR code. Use the scanning software to scan the QR code.

<Android> <iOS>

2. Tap an icon for installation.

Note

- Make sure that your **Bluetooth** device is connected to the Internet.
- Make sure that your **Bluetooth** device has a scanning software application. If you don’t have one, download one from “Google Android Market (Google Play Store)” or “Apple App Store”.
- Depending on the area, QR code may not work.

Install “LG XBOOM” App through “Google Android Market (Google Play Store)” or “Apple App Store”

1. Tap the “Google Android Market (Google Play Store)” or “Apple App Store” icon.
2. In the search bar, type in the “LG XBOOM” and search it.
3. In the search result list, find and tap “LG XBOOM” to start downloading **Bluetooth** app.

Note

- Make sure that your **Bluetooth** device is connected to the Internet.
- Make sure that your **Bluetooth** device is equipped with “Google Android Market (Google Play Store)” or “Apple App Store”.

Activate Bluetooth with “LG XBOOM” App

“LG XBOOM” app helps to connect your **Bluetooth** device to this unit.

Tap “LG XBOOM” app icon on the home screen to open “LG XBOOM” app, and go to the main menu.

Note

- “LG XBOOM” app will be available in the software version as follow;
  - Android OS: Version 6.0 or higher
  - iOS OS: Version 12.0 or higher
  - Minimum supported versions for each OS may change later.
- If you use “LG XBOOM” app for operation, there would be some differences between “LG XBOOM” app and the supplied remote control. Use the supplied remote control as necessary.
- Depending on the **Bluetooth** device, “LG XBOOM” app may not work.
- After connection of “LG XBOOM” app, music may be output from your **Bluetooth** device. In this case, try connecting procedure again.
- If you operate the other applications or change the settings on your **Bluetooth** device while using “LG XBOOM” app, “LG XBOOM” app may operate abnormally.
- When “LG XBOOM” app operates abnormally, check your **Bluetooth** device and the connection of “LG XBOOM” app and then try to connect again.
- Depending on the smart phone's operating system, you have some differences for “LG XBOOM” operation.
- Check **Bluetooth** setting on your **Bluetooth** device if “LG XBOOM” app connection does not work well.

Radio Operations

Be sure that FM antenna is connected. (Page 15)

Listening to the radio

1. Press **F** until FM appears in the display window. The last received station is tuned in.
2. Auto tuning:
   Press and hold **TUNING-/+** on the remote control or **⏮/⏭** on the unit until the frequency indication starts to change, then release. Scanning stops when the unit tunes in a station.

   Or

   Manual tuning:
   Press **TUNING-/+** on the remote control or **⏮/⏭** on the unit repeatedly.
3. Adjust the volume by pressing **VOL +/-** repeatedly.

Improving poor FM reception

Press **⏯**. This will change the tuner from stereo to mono and usually improve the reception.

Presetting the Radio Stations

You can preset 50 stations for FM.

Before tuning, make sure to turn down the volume.

1. Press **F** until FM appears in the display window.
2. Select the desired frequency by pressing **TUNING -/+** on the remote control or **⏮/⏭** on the unit.
3. Press **JUKEBOX/MEMORY** on the remote control. A preset number will blink in the display window.
4. Press **PRESET·FOLDER ∧/∨** on the remote control to select the preset number you want.
5. Press **JUKEBOX/MEMORY** on the remote control. The station is stored.
6. Repeat steps 2 to 5 to store other stations.
7. To listen a preset station, press **PRESET·FOLDER ∧/∨** or **0** to **9** numerical buttons on the remote control.

Deleting all the saved stations

1. Press **DELETE** on the remote control.
   "DEL ALL" will flash up on the display window
2. Press **DELETE** on the remote control to erase all the saved radio stations.
   "DELETED ALL" will scroll on the display window.

Sound adjustment

Setting the sound mode

This system has a number of pre-set equalizers. The displayed items for the equalizer may be different depending on sound sources and effects.

You can select a desired sound mode by using **EQ**.

On Display	Description
BASS (BASS BLAST) or BASS+ (BASS BLAST+)	Reinforces the bass and powerful sound.
POP CLASSIC ROCK JAZZ	This program lends an enthusiastic atmosphere to the sound, giving you the feeling you are at an actual rock, pop, jazz or classic concert.
FOOTBALL	You can enjoy the equalizer FOOTBALL STADIUM.
STANDARD	You can enjoy optimized sound.

You can select a desired sound mode by using **SPECIAL EQ** on the remote control or **SPECIAL EQ / BASS BLAST** (or **BASS BLAST+**) on the unit.

On Display	Region	Description
FUNK, REGUETON, SAMBA, MERENGUE, AXE, SALSA, SERTANEJ, FORRO	Latin America	Optimized equalizer for the music genre preferred in each region.
ARABIC	Middle East	
DANGDUT	Indonesia	
AFRO	Africa	
INDIA	India	

Note

By pressing **BASS BLAST** (or BASS BLAST+) on the remote control or pressing and holding **SPECIAL EQ / BASS BLAST** (or **BASS BLAST+**) on the unit for 3 seconds, you can directly select BASS (BASS BLAST) or BASS+ (BASS BLAST+) effect.

Setting the USER EQ

You can adjust the sound level of Bass, Middle and Treble as your preference.

1. Press **USER EQ** on the unit. "USER EQ" is displayed.
2. Press **USER EQ** on the unit repeatedly until desired setting appears in the display window.
3. Rotate Multi Jog on the unit to adjust the value.

Advanced Operations

Recording to USB

You can record a various sound source to USB while listening (Play or pause) to music. (USB 1, FM)

1. Connect the USB device to the unit.
2. Press **F** to select a function you want to record.
3. Start the recording by pressing **USB REC** on the remote control or **USB REC / DEMO** on the unit.

- If you connect both USB1 and USB2, press **USB REC** on the remote control or **USB REC / DEMO** on the unit when USB1 or USB2 which you want to record blinks in the display window.

To stop recording

To stop recording, press **USB REC** on the remote control or **USB REC / DEMO** on the unit.

To select recording bit rate

You can select recording bit rate. (USB 1, FM)

1. Press and hold **USB REC** on the remote control or **USB REC / DEMO** on the unit for 3 seconds.
2. Press ⏮/⏭ to select a bit rate.
3. Press **USB REC** on the remote control or **USB REC / DEMO** on the unit to finish the setting.

Copying file from USB 1 to USB 2

You can copy audio files from USB 1 to USB 2 quickly.

1. Connect the USB device to USB 2 port on the unit.
2. Connect a USB device including desired audio files to USB 1 port on the unit.
3. Press **F** to select USB 1 function.
4. Press **USB REC** on the remote control or **USB REC / DEMO** on the unit to start copying.

- Press **USB REC** on the remote control or **USB REC / DEMO** on the unit while displaying total folder and file index, All files on USB 1 will be copied.
- Press **USB REC** on the remote control or **USB REC / DEMO** on the unit while displaying folder name. All files on the folder will be copied.
- Press **USB REC** on the remote control or **USB REC / DEMO** on the unit while displaying file index or name. The file will be copied.

Note

- You can copy as described above even if power on/off status or function switched status.
- For search a folder or file, refer to page 17.

5. To cancel copying, press **USB REC** on the remote control or **USB REC / DEMO** on the unit.

The making of unauthorized copies of copy-protected material, including computer programs, files, broadcasts and sound recordings, may be an infringement of copyrights and constitute a criminal offense. This equipment should not be used for such purposes.
Be responsible
Respect copyrights

Note

- When you stop recording, the file that has been recorded at that time will be stored. (Exclude files that are currently being copied or to be copied.)
- Do not remove the USB device or turn off the unit during USB recording. If does not, an incomplete file may be made and not deleted on PC.
- If USB recording does not work, the message like "NO USB", "ERROR", "USB FULL", "NOT SUPPORT" or "FILE MAX" is displayed on the display window.
- Multi card reader device or external HDD can not be used for USB recording.
- A file is recorded by about 512 Mbyte when you record for a long term.

Note

- You can record various sound using DJ PAD, MIC or GUITAR. (Except USB Copying)
- Microphone and Guitar sound will be recorded by fixed volume level even if you control Microphone and Guitar volume.
- You may not store more than 2,000 files.
- In case of the unsupported MP3/WMA file, the file recording may be stopped.
- When you are recording during playback, the sound now playing is output.
- VOICE CANCELLER or KEY CHANGER will be reset, if you use recording function during operating VOICE CANCELLER or KEY CHANGER.
- VOICE CANCELLER or KEY CHANGER can not be operated during recording.
- It'll be stored as follows.

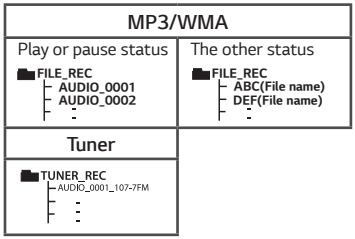

Tuner: The current recording frequency is shown.

JUKEBOX Playback

JUKEBOX function enables you to make a playlist of your favorite files from a USB device.
A playlist of up to 100 files can be entered.

Making JUKEBOX list

1. Press and hold **JUKEBOX/MEMORY** on the remote control to enter the edit mode.
   (Playing will be stopped when you press **JUKEBOX/MEMORY** on the remote control.)
2. Select a file by pressing ⏮/⏭ on the remote control.
3. Press **JUKEBOX/MEMORY** on the remote control to save the file.
4. Repeat steps 2 - 3 to store other files.
   (You can modify the list by pressing **PRESET·FOLDER** ∧/∨ on the remote control to select the JUKEBOX program number.)
5. Press **JUKEBOX/MEMORY** on the remote control once again.

To play the JUKEBOX list, press ⏯ on the remote control after you make the list.

Note

When making or modifying the JUKEBOX list, REPEAT mode is off.

Enjoying JUKEBOX

Press **JUKEBOX/MEMORY** on the remote control once. "ON-JUKEBOX" appears on the display window.

To play JUKEBOX list, press ⏯ on the remote control.

To cancel it, press **JUKEBOX/MEMORY** on the remote control once.
"OFF-JUKEBOX" appears on the display window.

Editing JUKEBOX

1. Press and hold **JUKEBOX/MEMORY** on the remote control to enter the edit mode.
   (Playing will be stopped when you press **JUKEBOX/MEMORY** on the remote control.)
2. Press **PRESET·FOLDER** ∧/∨ on the remote control to select a file to edit.
3. Press ⏮/⏭ on the remote control.
4. Press **JUKEBOX/MEMORY** on the remote control.
5. Repeat 2 to 4 to store the other files.
6. Press **JUKEBOX/MEMORY** on the remote control once again.

To play the JUKEBOX list, press ⏯ on the remote control after you edit the list.

Deleting JUKEBOX list

Deleting function only works in the edit mode.

1. Press and hold **JUKEBOX/MEMORY** on the remote control to enter the edit mode.

   Or

   Press **DELETE** on the remote control while JUKEBOX is played to enter the edit mode.
2. Select a song by pressing **PRESET·FOLDER** ∧/∨ on the remote control repeatedly.
3. Press **DELETE** on the remote control while a song is selected.

Note

- If there is no JUKEBOX list, "NO PROG" appears on the display window when you press **JUKEBOX/MEMORY** on the remote control.
- JUKEBOX is switched off in the case below.
  - Changing to a different function.
  - Turning the unit off and on.
  - Operating the numerical buttons on the remote control.
  - Playing a file by using **SEARCH** and Multi jog on the unit.
- JUKEBOX list is cleared in the case below.
  - Removing the USB device.
  - Deleting or recording music files in the USB device.

Other Operations

Turn off the sound temporarily

Press 🔇 on the remote control to mute your sound.

You can mute your unit, for example, to answer the telephone, the "MUTE" will appear in the display window.

To cancel it, press 🔇 on the remote control again or change the volume level.

CHILDSAFE Mode

This function helps to prevent you from being surprised when you turn on the unit in case that the volume of the unit is set at a high level.

To turn on CHILDSAFE mode, press and hold **OK** on the unit when the volume of the unit is "MIN".

In CHILDSAFE mode, the volume increase gradually.

To turn off CHILDSAFE mode, press and hold **OK** on the unit when the volume of the unit is "MIN" and this mode is turned on.

Note

In case of USB or BT (**Bluetooth**) function, CHILDSAFE mode does not work after about 2 minutes from power on the unit even if this mode is enabled.

DEMO

In the power off state, press **USB REC / DEMO** on the unit once. The unit will power on and display the each of functions. To cancel the DEMO function, press **USB REC / DEMO** on the unit once more.

Using Guitar

1. Connect your guitar to the **GUITAR IN** jack.
2. Play the music you want.
3. Play your guitar with the accompaniment. Adjust the guitar volume by pressing **MIC/GUITAR -/+** on the unit.

Note

- When not using the guitar, set the GUITAR volume to minimum and remove the guitar from the **GUITAR IN** jack.
- If the guitar is set too near the speaker, a howling sound may be produced. In this case, move the guitar away from the speaker or decrease the sound level by using the **MIC/GUITAR -/+** on the unit.
- If sound through the guitar is extremely loud, it may be distorted. In this case, press **MIC/GUITAR -/+** on the unit.
- Do not connect a microphone to the **GUITAR IN** jack.

Using Microphone

1. Connect your microphone to the **MIC IN** jack.
2. Play the music you want.
3. Sing along with the accompaniment. Adjust the microphone volume by pressing **MIC/GUITAR -/+** on the unit.

Note

- When not using the microphone, set the MIC volume to minimum or turn off the MIC and remove the microphone from the **MIC IN** jack.
- If the microphone is set too near the speaker, a howling sound may be produced. In this case, move the microphone away from the speaker or decrease the sound level by using the **MIC/GUITAR -/+** on the unit.
- If sound through the microphone is extremely loud, it may be distorted. In this case, press **MIC/GUITAR -/+** on the unit.
- You can give an echo effect or to the sound from the microphones by pressing **MIC ECHO**.
- Do not connect a guitar to the **MIC IN** jack.

VOICE CANCELLER

You can reduce the vocal tones during music playback from various input sources.
Press the **VOICE CANCELLER** and "ON-VOICE CANCELLER" will appear in display window.

To cancel it, press **VOICE CANCELLER** again.

The quality of the VOICE CANCELLER may be different depending on the recording conditions of the music files.

Note

- This function is available in the USB or BT (**Bluetooth**) Function.
- If the function is not available, "NOT SUPPORT" appears in the display window.
- This function is available to use only when a microphone is connected.
- If a microphone is not connected, "INSERT MIC" appears in the display window.
- It is not available on the mono source.
- To initialize it, change the function or disconnect the microphone.
- This function may not be initialized depending on the status of connected devices.

KEY CHANGER

You can adjust the key to 9 steps (4 steps higher, 4 steps lower and the original key).

- To make key more sharp, one by one, press the **KEY CHANGER**(♯) repeatedly during playback.
- To make the key more flatten, one by one, press the **KEY CHANGER**(♭) repeatedly during playback.

Note

- This function is available in the USB or BT (**Bluetooth**) Function.
- To initialize it, change the function, disconnect the microphone or change the music.
- This function may not be initialized depending on the status of connected devices.
- If the function is not available, "NOT SUPPORT" appears in the display window.
- If a microphone is not connected, "INSERT MIC" appears in the display window.

VOCAL EFFECTS

When you connect your microphone to the MIC jack, you can enjoy karaoke function by changing voice in the various source.

To select various vocal effects mode, pressing **VOCAL EFFECTS** repeatedly when vocal effects mode appears in the display window.

BASS → SOPRANO → HELIUM → ROBOT → DUET MAN → DUET WOMAN → BASS ECHO1 → SOPRANO ECHO1 → HELIUM ECHO1 → ROBOT ECHO1 → DUET MAN1 → DUET WOMAN1 → BASS ECHO2 → SOPRANO ECHO2 → HELIUM ECHO2 → ROBOT ECHO2 → DUET MAN2 → DUET WOMAN2 → OFF

Note

- If a microphone is not connected, "INSERT MIC" appears in the display window.
- If you press **KEY CHANGER** or **MIC ECHO** on VOCAL EFFECTS mode, after backing up current VOCAL EFFECTS, turn off VOCAL EFFECTS mode and operate KEY CHANGER or ECHO mode.
- To turn off VOCAL EFFECTS mode, press and hold **VOCAL EFFECTS**.

ECHO

When you connect your microphone to the MIC jack, you can give an echo effect to the sound from the microphones by pressing **MIC ECHO**.

ECHO 1 → ECHO 2 → OFF

Note

- If a microphone is not connected, "INSERT MIC" appears in the display window.
- If you press **VOCAL EFFECTS** button on ECHO mode, after backing up current ECHO, turn off ECHO mode and operate VOCAL EFFECTS mode.
  Press **MIC ECHO** again, after backing up current VOCAL EFFECTS, operate ECHO mode.

LIGHTING

This function offers a party atmosphere by operating the lighting on the unit.

Press **LIGHTING** repeatedly.

PARTY → WATER → FOREST → (MY STYLE) → OFF

Note

- Lighting function is available in all functions.
- Lighting mode retains its previous mode when you first press **LIGHTING**, press again to change modes.
- If you want to use MY STYLE, you have to register a source with "LG XBOOM" app.
- Do not look directly at the light emitting part when the LIGHTING is turned on.
- Operation may be different depending on the played music, connected device or setting status.
- If the illumination brightness is glaring, switch on the room lights or turn off the LIGHTING of the unit.
- You can also turn off the light by pressing and holding **LIGHTING**.

Sleep Timer Setting

Press **SLEEP** on the remote control repeatedly to select delay time between 10 and 180 minutes. After the delay time, the unit will be turned off.

To cancel the sleep function, press **SLEEP** on the remote control repeatedly until "OFF" appears.

Note

- You can check the remaining time before the unit is turned off. Press **SLEEP** on the remote control to check or change the remaining time.
- You can edit the remain time when the remaining time or "DIMMER" is displayed.

Dimmer

Press **SLEEP** on the remote control once.
The display window will be darkened by half.

To cancel it, press **SLEEP** on the remote control repeatedly until "OFF" appears.

Note

All the lighting turns off when Dimmer is being operated.

AUTO POWER On

This unit automatically turns on by an input source: LG TV, **Bluetooth**.

When you turn on your TV connected to this unit, this unit recognizes the input signal and selects the suitable function. You can hear the sound from the unit.

If you try to connect your **Bluetooth** device, this unit turns on and connects your **Bluetooth** device.
You can play your music.

When you turn off this unit by pressing ⏻ on the unit for 5 seconds each time, you can turn on or off the AUTO POWER function.

On Display	Description
ON-AUTO POWER	AUTO POWER function is turned on.
OFF-AUTO POWER	AUTO POWER function is turned off.

Note

- Depending on the connected device, this function may not operate.
- Depending on the connected device, the unit turns on but **Bluetooth** function may not be connected.
- If you disconnect **Bluetooth** connection by this unit, some **Bluetooth** devices try to connect to the unit continually. Therefore it is recommended to disconnect the connection before turning off the unit.
- If you try to connect to the "LG XBOOM" app, **Bluetooth** function of this unit is turned on. (Android Only)
- If you turn on the unit using LG TV or **Bluetooth** function, proper function of this unit is turned on.
- If you have already paired with this unit, this unit can automatically turn on by an input source when this unit is turned off.

Auto function change

This unit recognizes input signals such as **Bluetooth** and LG TV and then automatically changes to the suitable function.

When you try to connect Bluetooth device

When you try to connect your **Bluetooth** device to this unit, **Bluetooth** function is selected. Play your music on the **Bluetooth** device.

When LG TV is connected

When you turn on your LG TV connected by LG Sound Sync (Wireless connection), this unit changes the function to LG TV. You can hear the sound from your TV.

Note

- This function is not available during recording or deleting.
- If the **Bluetooth** connection lock function is set, **Bluetooth** and LG TV connection will be only available on **Bluetooth** and LG TV function.

Setting the Clock

1. Turn the unit on.
2. Press and hold **CLOCK** on the remote control.
3. Select time mode by pressing ⏮ / ⏭ on the remote control.
   - AM 12:00 (for an AM and PM display) or 0:00 (for a 24 hour display)
4. Press **SET** on the remote control to confirm your selection.
5. Select the hours by pressing ⏮ / ⏭ on the remote control.
6. Press **SET** on the remote control.
7. Select the minutes by pressing ⏮ / ⏭ on the remote control.
8. Press **SET** on the remote control.

Setting the Clock through "LG XBOOM" App

Install "LG XBOOM" app on your Android or iOS device. (Page 23-24)

Your unit's clock will be automatically synchronized with your device by activating **Bluetooth** connection through "LG XBOOM" app.

Using your unit as an alarm clock

1. Turn the unit on.
2. Press and hold **ALARM** on the remote control.
3. Press ⏮ / ⏭ on the remote control to change the hours and minutes and press **SET** on the remote control to save.
4. Press ⏮ / ⏭ on the remote control to select function and press **SET** on the remote control to save.
   - Press ⏮ / ⏭ on the remote control to select a preset number when you select tuner and then, press **SET** on the remote control.
     If there is no preset number, this step is skipped.
5. Press ⏮ / ⏭ on the remote control to change the volume and press **SET** on the remote control to save.

Note

- If you set the clock time, you can check the time by pressing **CLOCK** on the remote control even when the unit is turned off.
- You can set alarm after you set the clock time.
- If you set the clock time and alarm, you can check the alarm setting information by pressing **ALARM** on the remote control even when the unit is turned off.
- You can select ALARM ON/OFF mode by pressing **ALARM** on the remote control.

LG Sound Sync

Sound Sync Wireless

You can control some functions of this unit by your TV's remote control with LG Sound Sync. It is compatible with LG TV that supports LG Sound Sync. Make sure your TV has the LG Sound Sync logo.

Controllable function by LG TV's remote control: Volume up/down, mute

1. Turn on the unit by pressing ⏻.
2. Press **F** until LG TV function is selected.
3. Set up the sound output of TV to listen to the sound through this unit:
   "PAIRED" appears on the display window for about 3 seconds and then you can see "LG TV" on the display window if the TV and this unit are connected normally.
   (Refer to the TV's instruction manual for the details of LG Sound Sync.)

Note

- You can also use the remote control of this unit while using LG Sound Sync. If you use TV's remote control again, the unit synchronizes with the TV. (According to TV Specifications, the volume and mute of this unit synchronize with TV.)
- If the connection fails, check the conditions of this unit and your TV: power, function.
- Make sure of the condition of this unit and the connection in the cases below when using LG Sound Sync.
  - The unit is turned off.
  - Changing to a different function.
  - Disconnecting the wireless connection caused by interference or a distance.
- If you try to change the function on using the LG TV function, volume will be change according to the LG TV volume level.
- If you turned off the unit directly by pressing ⏻, LG Sound Sync will be disconnected. To use this function again, you should reconnect the TV and the unit.
- The volume may be increased when the TV and this unit is connected by LG Sound Sync. Decrease the TV volume and then connect with this unit.
- When you turn on your LG TV connected by LG Sound Sync or enter LG TV function, this unit changes the function to LG TV automatically.
- You should set the TV Sound output manually depending on the TV version.
- If you control TV volume when this unit and TV are connected by LG Sound Sync, this unit may louder the volume due to synchronizing volume with TV's.

WIRELESS PARTY LINK Connection

You can enjoy the sound by using two units. For enjoying WIRELESS PARTY LINK, you need to purchase another unit.

It is compatible with unit that supports WIRELESS PARTY LINK.

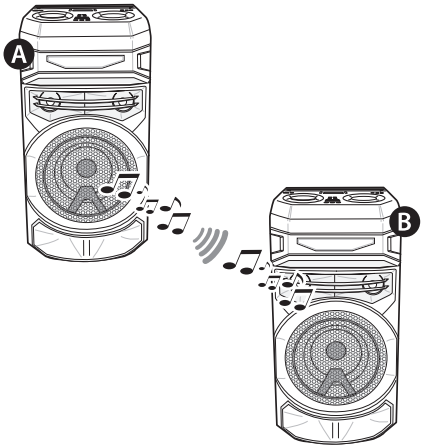

1. Press **TWIN** on the unit.
   ROLE SELECT appears in the display window.
2. Press **TWIN** on the unit to select MAIN or OTHER.
   - A unit: Selects MAIN.
   - B unit: Selects OTHER.

   Two units try to connect with each other.
3. When these units are successfully connected each other, each of connected device names appears in the each unit.

Note

- If you are using the LG Sound Sync, this function is not available. If you connect the LG TV function, "NOT SUPPORT" appears in the display window.
- You can use microphone or guitar in the OTHER unit only. In case of OTHER unit, some functions are supported only.
- When WIRELESS PARTY LINK is disconnected, OTHER unit is changed to BT (**Bluetooth**) function.
- If the connection is failed, "FAILED" appears in the display window.
- Mute function is synchronized with each other.
- WIRELESS PARTY LINK connection will be disconnected when you turn off the unit or press **TWIN** on the unit.
- Sound of MAIN unit and OTHER unit may be different depending on playback status or source.
- Check the following information when connecting to **Bluetooth.**
  - You can connect only one **Bluetooth** device in the MAIN unit. You cannot connect **Bluetooth** device to the OTHER unit.
  - WIRELESS PARTY LINK connection is only supported on Android devices. (WIRELESS PARTY LINK connection may not be supported depending on the connected device specifications or OS.)
  - Removable/detachable **Bluetooth** devices (ex. Dongle etc.) will not support WIRELESS PARTY LINK connection.
  - When WIRELESS PARTY LINK is connected, **Bluetooth** connection is not available in status of recording or deleting.
  - If you connect WIRELESS PARTY LINK while you are playing connected **Bluetooth** device, it may be reconnected again, depending on phone specification.

Troubleshooting

General

Problem	Cause & Solution
The unit does not work properly.	• Turn off the power of this unit and the connected external device (TV, Woofer, DVD-player, Amplifier, etc.) and turn them on again. • Disconnect the power cord of this unit and the connected external device (TV, Woofer, DVD-player, Amplifier, etc.) and then try connecting again. • Previous setting may not be saved when device power is shut off.
No Power.	• The power cord is not plugged in. Plug in the power cord. • Check whether electricity failed. Check the condition by operating electronic devices using the same AC outlet.
No sound.	• Check whether you select right function. Press function button and check if you have selected the right function.
Radio stations cannot be tuned in properly.	• The antenna is positioned or connected poorly. Connect the antenna securely. • The signal strength of the radio station is too weak. Tune to the station manually. • No stations have been preset or preset stations have been cleared (when tuning by scanning preset channels). Preset some radio stations, see page 25 for details.

Problem	Cause & Solution
The remote control does not work properly.	• The remote control is too far from the unit. Operate the remote control within about 7 m (23 feet). • There is an obstacle in the path of the remote control and the unit. Remove the obstacle. • The batteries in the remote control are exhausted. Replace the batteries with new ones.
No speaker light.	• Check the light effects by pressing **LIGHTING** (Page 34).
LG Sound Sync does not work.	• Check whether your LG TV supports LG Sound Sync. • Check connection of LG Sound Sync. • Check sound setting of your TV and this unit.
The AUTO POWER ON function does not work.	• Check connection of the external device such as TV or **Bluetooth** device. • Depending on the connected device, this function may not operate.
USB is not recognized.	• Format the USB device and connect it again. When formatting the USB device, select the available file system. (Page 7).

NOTES to release Demo mode

Problem	Cause & Solution
Can not change input source with '**F**' key such as BT(**Bluetooth**), USB etc. and only DEMO mode is showing in the display.	• Press '**DEMO**' Key on the unit for 15 seconds.
Remote Control does not work properly.	

General specifications

General	
Power requirements	Refer to the main label on the unit.
Power consumption	Refer to the main label on the unit.
Dimensions (W x H x D)	Approx. 330.0 mm x 685.0 mm x 344.0 mm
Operating temperature	5 °C to 35 °C
Operating humidity	5 % to 60 % RH

Inputs	
Microphone (MIC IN)	Sensitivity 20 mV (1 kHz), 6.3 mm jack x 1
Guitar (GUITAR IN)	Sensitivity 190 mV (1 kHz), 6.3 mm jack x 1

Tuner	
FM Tuning Range	87.5 to 108.0 MHz or 87.50 to 108.00 MHz

System	
Frequency Response	250 to 20,000 Hz
Signal-to-noise ratio	More than 80 dB
Dynamic range	More than 80 dB
Bus Power Supply (USB)	5 V ⎓ 500 mA

- Design and specifications are subject to change without notice.

Trademarks and licenses

All other trademarks are trademarks of their respective owners.

The **Bluetooth®** word mark and logos are registered trademarks owned by the **Bluetooth** SIG, Inc. and any use of such marks by LG Electronics is under license.

Other trademarks and trade names are those of their respective owners.

"Made for iPhone," and "Made for iPod" mean that an electronic accessory has been designed to connect specifically to iPhone or iPod, respectively, and has been certified by the developer to meet Apple performance standards. Apple is not responsible for the operation of this device or its compliance with safety and regulatory standards. Please note that the use of this accessory with iPhone or iPod may affect wireless performance.

Maintenance

Handling the Unit

When shipping the unit

Please save the original shipping carton and packing materials. If you need to ship the unit, for maximum protection, re-pack the unit as it was originally packed at the factory.

Keeping the exterior surfaces clean

Do not use volatile liquids such as insecticide spray near the unit. Wiping with strong pressure may damage the surface. Do not leave rubber or plastic products in contact with the unit for a long period of time.

Cleaning the unit

To clean the unit, use a soft, dry cloth. If the surfaces are extremely dirty, use a soft cloth lightly moistened with a mild detergent solution. Do not use strong solvents such as alcohol, benzine, or thinner, as these might damage the surface of the unit.

LG

Life's Good