LG SIGNATURE

Owner's Manual

Air Purifier & Humidifier

Read this owner's manual thoroughly before operating the appliance and keep it handy for reference at all times.

MFL69596008

www.LGSIGNATURE.com

Copyright © 2017 - 2019 LG Electronics. All Rights Reserved.

Table of Contents

The images in this owner's manual may be different from the product's actual components and accessories, which are subject to change by the manufacturer without prior notice for product improvement purposes.

Safety Instructions 04

Disposal of waste batteries/accumulators 08
Disposal of your old appliance..... 08

Unpacking 09

Parts 09
Removing Packing Materials 10
Remote Control Setup 10

Installation.....12

Transporting or Moving the Product 12
Installing the Product 12

Operation.....13

Product Overview 13
Purify Mode 18
Humid Purify Mode 18
Silent Mode..... 19
Adjusting the Fan Speed 19
Turbo Mode 19
Checking Air Quality 20
Sterilizing the Air Using Ions..... 22
Off Timer..... 23
Control Lock 23
Hygiene Drying Function 24
Filling the Water Bucket..... 24
Emptying the Water Bucket 25

Smart Functions 26

Installing the Application 26
Creating an Account 26
Using the Wi-Fi Function 26
Smart Diagnosis™..... 28

Maintenance.....30

Scheduled Maintenance 30
Cleaning the Exterior..... 31
Cleaning the Top Cover 31
Cleaning the Watering System 31
Cleaning the Air Purifier Filters..... 34
Cleaning the Dust Sensor..... 36
Cleaning the Watering Engine™ 37
Storage..... 37

Before Calling for Service.....39

Rev.03_022019

Safety Instructions

READ AND SAVE THESE INSTRUCTIONS.

This guide contains many important safety messages. Always read and obey all safety messages.

⚠ This is the safety alert symbol. It alerts you to safety messages that inform you of hazards that can kill or hurt you or others, or cause damage to the product.

All safety messages will be preceded by the safety alert symbol and the hazard signal word WARNING or CAUTION. These words mean:

⚠ **WARNING** You can be killed or seriously injured if you do not follow instructions.

⚠ **CAUTION** Indicates an imminently hazardous situation which, if not avoided, may result in minor or moderate injury, or product damage.

This equipment is home (class B) EMI suitable equipment, which is mainly for home use, and it can be used in all regions.

⚠ Warning

To reduce the risk of fire, electric shock, or personal injury when using this product, follow basic safety precautions, including the following:

CHILDREN IN THE HOUSEHOLD

This appliance is not intended for use by persons (including children) with reduced physical, sensory or mental capabilities or lack of experience and knowledge, unless they have been given supervision or instruction concerning use of the appliance by a person responsible for their safety. Children should be supervised to ensure that they do not play with the appliance.

INSTALLATION

- Install product so that the plug is easily accessible.
- Install the product on a flat, level surface.
- Do not expose the product to splashing water or rain.
- Do not install the product in an area exposed to direct sunlight or near heat-generating equipment such as ovens or space heaters.
- Do not install the product in an area prone to combustible gas leaks, grease, or metal dust.

POWER

- Connect this product to a dedicated, grounded electrical outlet rated for 220—240 V.
- Do not use an adaptor plug with this product or plug it into a multi-outlet extension cord.
- Do not, under any circumstances, cut or remove the third (ground) prong from the power cord.
- NEVER unplug the product by pulling on the power cord. Grip the plug firmly and pull it straight out from the outlet.
- If the supply cord is damaged, it must be replaced by the manufacturer or its service agents or a similarly qualified person in order to avoid a hazard.
- Do not use an uncertified power outlet.
- Unplug the power plug immediately in the event of a blackout or thunderstorm.
- Plug in the power plug with the power cord facing downward.
- Unplug the product before cleaning it, replacing the filters or filling water in the water bucket directly.
- Do not touch the power plug with wet hands.
- Clean dirt or moisture off the power plug before plugging it in.
- Take care not to pinch the power cord under the product or any heavy objects.
- Unplug the product when not in use.
- Do not modify or extend the power cable.
- When the power cord is to be replaced, the replacement work shall be performed by authorized personnel using only genuine replacement parts.

USE

- If the product is submerged in water, stop using the product and contact an LG Electronics Customer Information Center for service.
- In the event of a gas leak (propane/LPG), ensure adequate ventilation and contact an authorized service center before resuming use. Do not touch the product or the power plug.
- Do not use an abrasive cloth or sponge, or a metal brush to clean the product.
- Disconnect the power cord immediately if you hear a noise, smell a strange odor, or detect smoke coming from the product.
- Do not disassemble, repair or modify the product yourself.
- Do not use or store flammable or combustible substances such as ether, benzene, alcohol, drugs, LP gas, combustible sprays, insecticides, air fresheners, cosmetics, candles, or lamps near the product.
- Do not place the cord under rugs, carpeting, or mats.
- Do not allow animals or pets to chew on the power cord.
- Do not allow children to hang on or play with the product.
- This appliance is not intended for use by persons (including children) with reduced physical, sensory, or mental capabilities, or lack of experience and knowledge, unless they have been given supervision or instruction concerning the use of the appliance by a person responsible for their safety.

- Do not move the product while it is operating.
- Use only the handle to move the product.
- Do not place objects on top of the product.
- Do not insert hands or metal objects into the air inlet or outlet.
- Product must be properly grounded.
- Avoid pinch points when removing or assembling the filters.
- Operate the product on a stable surface. If the product tips over and water spills out during humidification, there is a risk of electric shock.
- Unplug the product and empty any remaining water before storing the product or if it will be unused for an extended period.
- Do not use the product if it is damaged or disassembled.
- Unplug the product before cleaning it.
- Do not put combustible or flammable materials inside the product.

DISPOSAL

- Dispose of all packaging materials promptly and keep them out of the reach of children.

⚠ Caution

To reduce the risk of fire, electric shock, or personal injury when using the product, follow basic safety precautions, including the following:

INSTALLATION

- Do not tilt the product while moving or cleaning it.
- This product is not designed for use in mobile vehicles, including RVs or boats.
- Do not place the product within 1 m of a TV or stereo equipment. It may cause interference.
- Do not place the product near a window or near the air intake or outlet of an air conditioner or heater. Doing so may cause the humidity sensor to malfunction.

USAGE

- Do not use to remove toxic gases such as carbon monoxide.
- Do not use the product in place of a vent hood. Doing so will shorten the product's lifespan.
- If used for a long period in an area with unstable voltage, the product may automatically shut down to protect product components.
- Do not block the product's air intake or outlet.
- Do not place the product near curtains which can be blown against it and cause the humidity sensor to malfunction.
- Use the product for its intended purpose. The product is not intended for preserving or protecting animals, precision equipment, or artwork.
- Do not step on the product or place objects on top of the product.
- Do not operate the product with wet hands.
- Do not allow the moisture from a humidifier to directly contact the product.
- Hold the water bucket with both hands when moving it.
- Do not expose the product to freezing temperatures.
- Replace any remaining water in the product with clean water every day.
- Do not use the product while it is on its side.
- Do not place the product on or near items that may be damaged or discolored by heat or humidity.
- Do not store or ship the product with water in it.
- Use clean tap water. Do not use water that is hotter than 40°C.
- Use the filter only for its intended purpose.
- Do not use detergents, cosmetics, chemicals, air fresheners, or disinfectants in the product.
- Do not drink the water used in the product or use it to feed plants or animals. Doing so could cause illness.
- Use a soft cloth to clean the product. Do not use strong detergents or solvents.
- When cleaning the parts, use proper cleaning method according to the corresponding manual. Also, when replacing the parts, install new parts in proper locations according to the corresponding manual.

Disposal of waste batteries/accumulators



- This symbol may be combined with chemical symbols for mercury (Hg), cadmium (Cd) or lead (Pb) if the battery contains more than 0.0005% of mercury, 0.002% of cadmium or 0.004% of lead.
- All batteries/accumulators should be disposed separately from the municipal waste stream via designated collection facilities appointed by the government or the local authorities.
- The correct disposal of your old batteries/accumulators will help to prevent potential negative consequences for the environment, animal and human health.
- For more detailed information about disposal of your old batteries/accumulators, please contact your city office, waste disposal service or the shop where you purchased the product. (http://www.lg.com/global/sustainability/environment/take-back-recycling/global-network-europe)

Disposal of your old appliance



- This crossed-out wheeled bin symbol indicates that waste electrical and electronic products (WEEE) should be disposed of separately from the municipal waste stream.
- Old electrical products can contain hazardous substances so correct disposal of your old appliance will help prevent potential negative consequences for the environment and human health. Your old appliance may contain reusable parts that could be used to repair other products, and other valuable materials that can be recycled to conserve limited resources.
- You can take your appliance either to the shop where you purchased the product, or contact your local government waste office for details of your nearest authorised WEEE collection point. For the most up to date information for your country please see www.lg.com/global/recycling

⚠ Warning — This appliance contains a UV-C emitter. Do not stare at the light source.

- Unintended use of the appliance or damage to the housing may result in the escape of dangerous UV-C radiation. UV-C radiation may, even in little doses, cause harm to the eyes and skin.
- Appliances that are obviously damaged must not be operated.
- If the UV-C emitter is damaged, it must be replaced by the manufacturer or its service agents or a similarly qualified person in order to avoid a hazard.

Unpacking

Parts

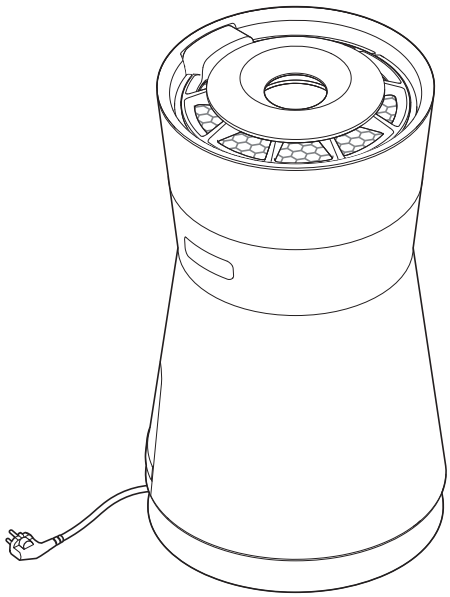

Air purifier and humidifier

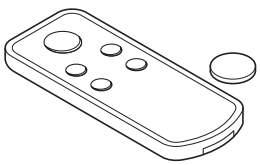

Remote controller /
battery (CR2025, 1 EA)



Ultra-fine cloth

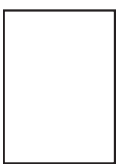

Owner's Manual

- The appearance or components of the product may differ depending on the model.
- The shape of the power plug differs depending on the country.

Removing Packing Materials

Unpack the product and remove any packing tape or protective vinyl before using the product.

1 Take the product out of the box and remove the packing tape on the product.

2 Press the black button on the filter tray to slide the tray out. Remove the tray.

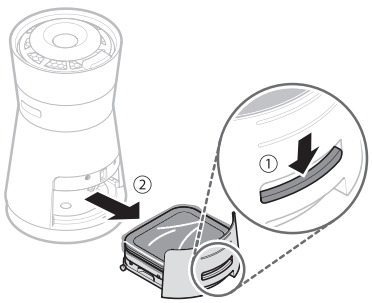

3 Disassemble the deodorizing Black Filter and remove it from its protective vinyl sleeve.

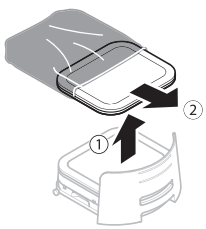

4 Reassemble the deodorizing Black Filter, aligning the tabs on the bottom of the filter with the slots on the filter below it.

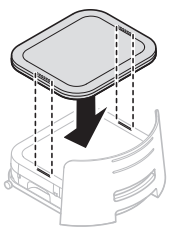

Remote Control Setup

1 With the backside of the remote controller facing up, remove the remote controller's battery tray by pushing the release on the left of the tray and pulling out.

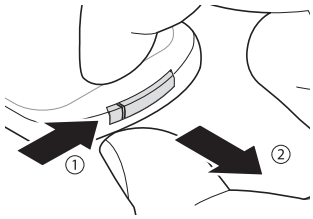

2 Insert the included battery into the battery tray with the + facing up.

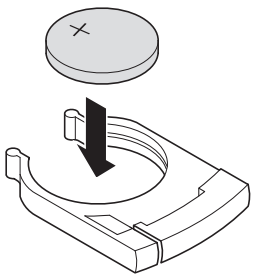

3 Slide the battery tray back into the remote controller until it clicks.

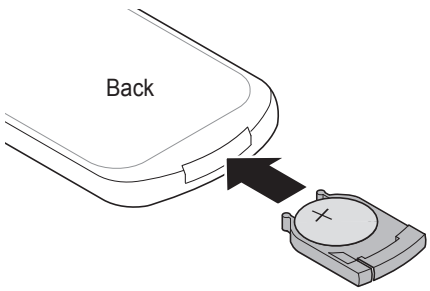

Warning

- A button/Coin-type battery is used in the remote control of the product.
- Do not swallow the battery. Otherwise, it may cause serious damage, including damage to your organs.
- If you swallow the battery, you may suffer organ damage within 2 hours. If serious, it may even cause death.
- Keep the battery out of children's reach.
- If the battery tray is not fixed firmly, stop using the product and keep the battery tray out of children's reach.
- If you swallowed the battery, seek immediate medical help.

Caution

- Do not modify the battery arbitrarily. Otherwise, it may cause fire or product failure.
- If you insert the battery into the product incorrectly, it may cause an explosion.
- Do not disassemble or recharge the used battery. Do not throw it in the fire or subject it to heat. Doing so may cause an explosion.

Note

- If the battery runs out of charge, replace it with a new one (CR2025).
- If the remote control has a problem, try replacing the battery or changing the poles of the battery before contacting the service center.
- Dispose of the used battery according to environmental regulations.

Installation

Transporting or Moving the Product

Caution

Transport the product in a well-secured and upright position. Impacts may cause product damage.

The product is heavy. Use two people when moving it. Dropping the product may cause personal injury or product malfunction.



Empty the water bucket before moving the product. Failure to do so may cause electric shock or fire.



When moving or storing the product, wrap the power cord around the base of the product to prevent personal injury, damage to the cord, or damage to floors.

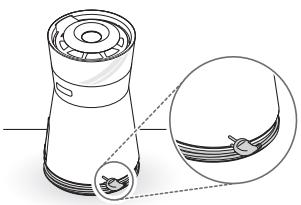

Installing the Product

Caution

Install the product on a strong, level surface. Installing the product on a weak or tilted surface may cause noise and vibration or tipping, resulting in injury.

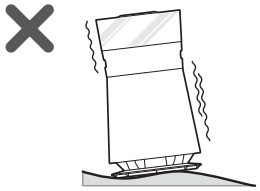

Allow a 10 cm clearance between the product and surrounding surfaces or objects. The air inlet needs space to function properly.

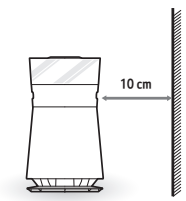

Do not install the product near curtains which could block the air inlet or outlet. Doing so may result in product malfunction or failure.

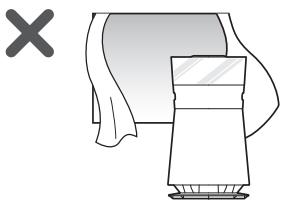

Install the product near an easily accessible electrical outlet and out of heavy traffic areas to avoid a trip hazard. Do not cover the cord with a carpet or mat.

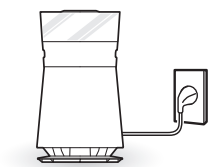

Do not alter the plug in any way.

Operation

Product Overview

Front View

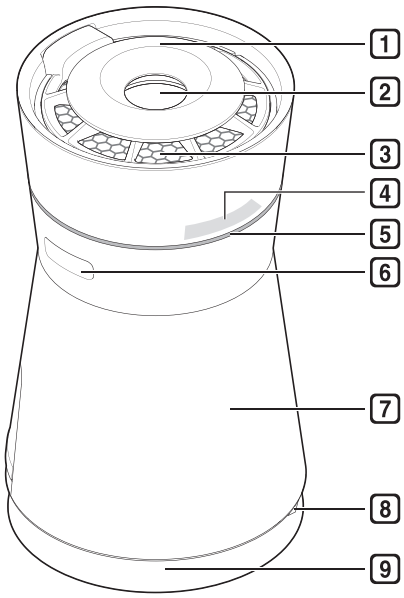

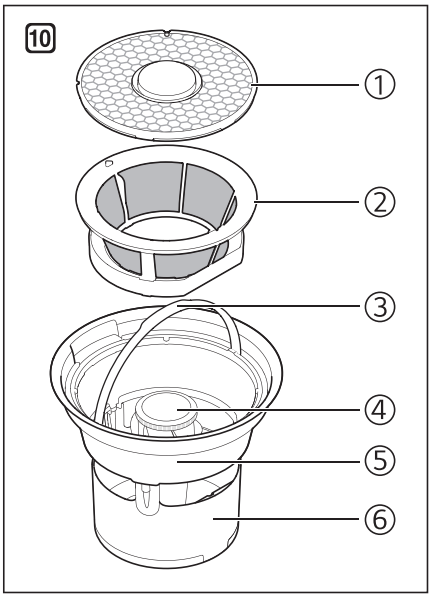

1 Top cover (control panel and water level indicator light)

Change product settings or check water level.

2 Easy-fill water bucket inlet

Easily add water to the water bucket.

3 Air outlet

Vents purified air and moisture.

4 Status display panel

Check the product's settings and the air quality level.

5 Air quality indicator light

Displays current overall air quality level using colored light.

6 Main unit handles

Use handles to move the product.

7 Smart Diagnosis™ speaker

Used when troubleshooting product malfunctions or failures. Refer to **Smart Diagnosis™** on page 28.

8 Remote controller sensor panel

9 Air inlet

10 Signature watering system

- Top water bucket filter ①
- Side water bucket filter ②
- Water bucket handle ③
- Watering Engine™ ④
- Air quality window ⑤
- Water bucket ⑥

• Product's exterior or components may be different for each model.

Back View

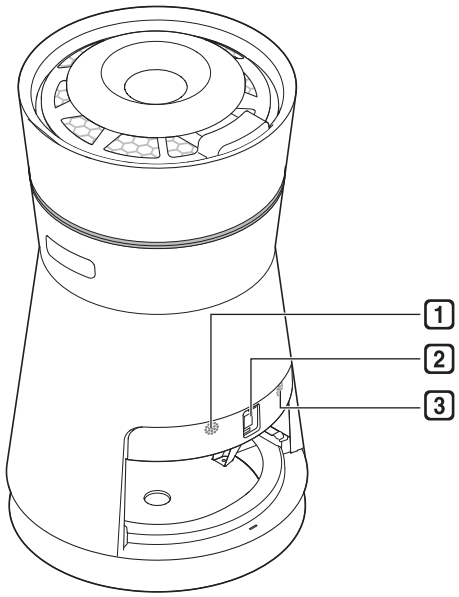

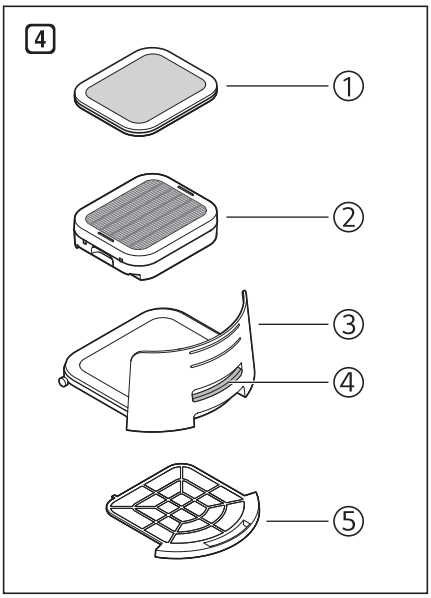

1 Humidity sensor

Detects humidity level.

2 PM1.0 (super ultra-fine dust) sensor

Detects dust density.

3 Odor sensor

Detects odors in the air.

4 Signature Black filter system

① **Deodorizing Black Filter**
Filters out unpleasant odors such as strong food odors or cigarette smoke odor.

② **PM 1.0 Black Filter**
Filters out super ultra-fine dust particles like fine sand or cigarette ash.

③ **Filter tray**
Holds the PM 1.0 Black Filter and the deodorizing Black Filter.

④ **Filter tray release button**
Opens the filter tray.

⑤ **Ultra fine filter (PRE-FILTER)**
Filters out large dust particles like animal hair.

Note

- Product will not work without the filters in place.
- Close outside doors and windows during use, if possible. To avoid high carbon dioxide levels, do not use for long periods in a tightly enclosed space.
- The product cannot remove harmful CO (carbon monoxide) gas from the air.
- The air purifier's deodorizing Black Filter is designed to remove odors from the air.
- If the deodorizing Black Filter is exposed to excessive odors for long periods, it may need to be replaced more often. In this case, the filter itself may produce an odor.
- Do not use the air purifier in place of a range hood or vent. To rid indoor air of strong odors, ventilate the area using a range hood or by opening windows or doors. Then use the product to remove any odors remaining after ventilation.

Control Panel and Water Level Indicator

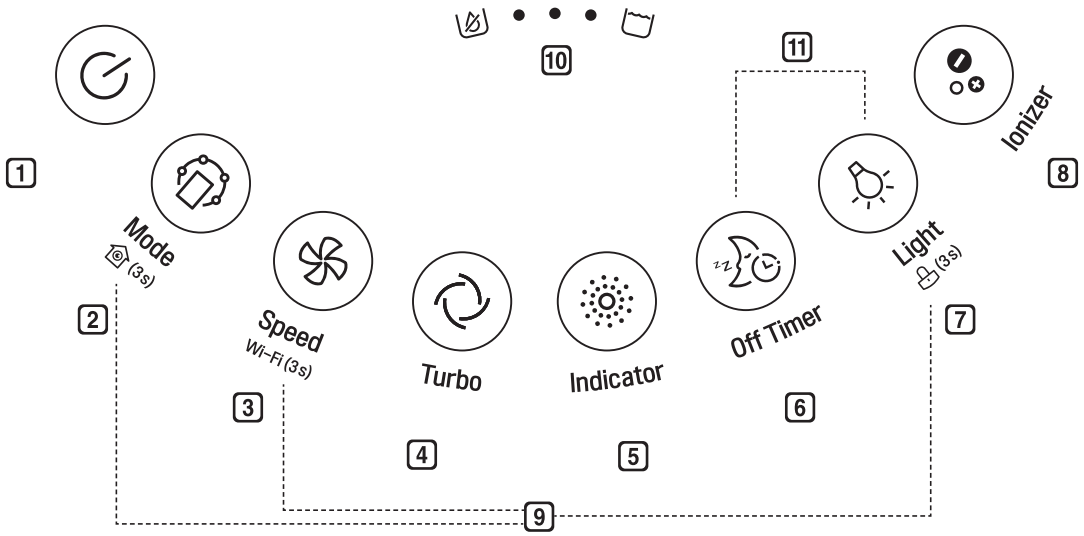

1 Start/Stop button

Starts or stops operation.

2 Mode button

Sets the operating mode.

- Press the button repeatedly to cycle through the operating modes from **Purify** → **Humid Purify** → **Silent**.

3 Speed button

Adjusts the fan speed.

4 Turbo button

Quickly purifies the air.

5 Indicator button

Cycles through the current humidity and dust density levels.

6 Off Timer button

Puts product in **Sleep** mode and sets it to turn off automatically after 2, 4, 8, or 12 hours.

7 Light button

Turns the air quality indicator light on/off.

8 Ionizer button

Generates ions to remove various germs in the indoor air.

9 Additional functions

Press and hold each button for about 3 seconds to start the corresponding function.

- : Air Quality Monitoring function (Refer to page 22.)
- Wi-Fi : Wi-Fi function (Refer to page 26.)
- : Control Lock function (Refer to page 23.)

10 Water level indicator lights

Displays the fill level of the water bucket.

- (Empty) • • • (Full)

11 Hygiene drying function

- When the Hygiene Drying function is running, (hygiene drying) appears in the status display panel.
- To turn off the Hygiene Drying function, press and hold the **Off Timer** and **Light** buttons for about 3 seconds.

Status Display Panel

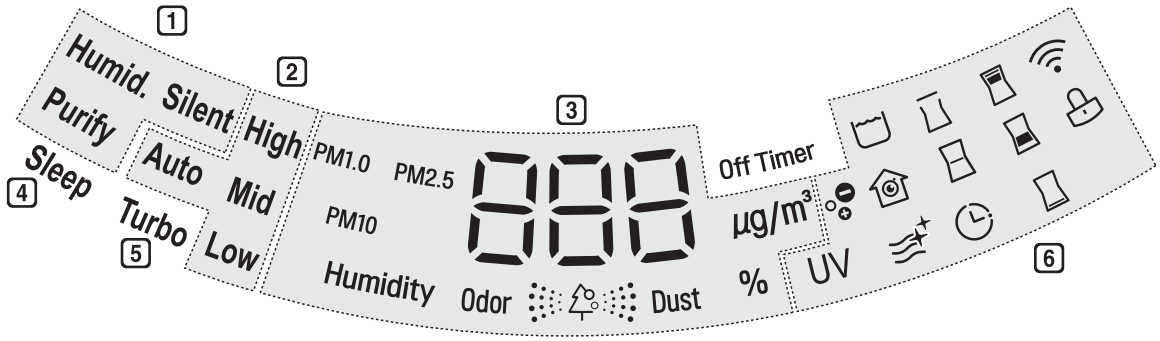

1 **Operating mode display**

2 **Fan speed display**

3 **Air quality display**

4 **Sleep timer display**

5 **Turbo display**

6 **Display Icons**

Icon	Description
	Ionizer function is ON to sterilize the air using ions.
UV	Water bucket's UV LED Lighting Water Treatment is running.
	Water bucket is full.
	Air quality monitoring function is ON.
	Hygiene drying function is ON. (Refer to page 24.)
	ON/OFF timer is activated using the LG Smart ThinQ application.
	Top cover is not properly mounted.
	One or more of water bucket filters are missing, improperly assembled, or need to be cleaned. (Refer to page 31.)
	The deodorizing Black Filter is missing or improperly assembled.
	PM 1.0 Black Filter or deodorizing Black Filter are missing, improperly assembled, or need to be cleaned. (Refer to page 34, 35.)
	The ultra fine filter (pre-filter) is missing, improperly assembled, or needs to be cleaned. (Refer to page 34.)
	Product is connected to a Wi-Fi network.
	Control Lock function is ON.

Remote Controller

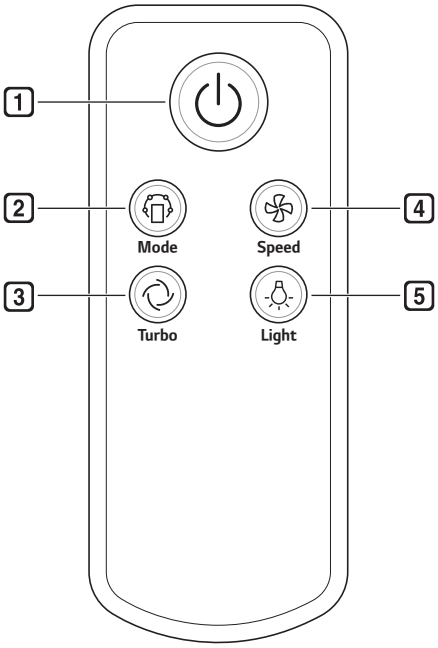

1 Start/Stop button

Starts or stops operation.

2 Mode button

Sets the operating mode.

- Press the button repeatedly to cycle through the operating modes from **Purify** → **Humid Purify** → **Silent**.

3 Turbo button

Quickly purifies the air.

4 Speed button

Adjusts the fan speed.

5 Light button

Turns the air quality indicator light on/off.

Remote Controller Sensor

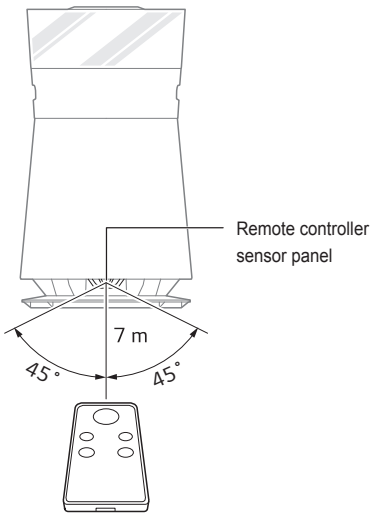

Caution

- Do not step on or apply pressure.
- Do not store or use near water or in high humidity.
- Do not store or use near an open flame or heating devices such as space heaters or ovens. The battery could explode.
- Remove the battery before storing to avoid damage from leaking battery fluid.
- Do not disassemble or recharge the battery. Dispose of the used battery properly to avoid fire or explosion.

Note

- To purchase a replacement remote controller, visit a nearby LG service center.
- Pressing multiple buttons at the same time may cause the remote to malfunction.
- To use, hold with the remote controller's transmitter facing the product's sensor.
- The remote works best within 7m and 45° to the left or right of the sensor in front of the product.
- If the remote controller does not work after replacing the battery, call for service.
- The remote controller may not work under very bright light from three-wave fluorescent lamps or neon signs.

Purify Mode

This mode cleans and freshens indoor air.

1 Press the **Start/Stop** button on the machine or the remote controller.

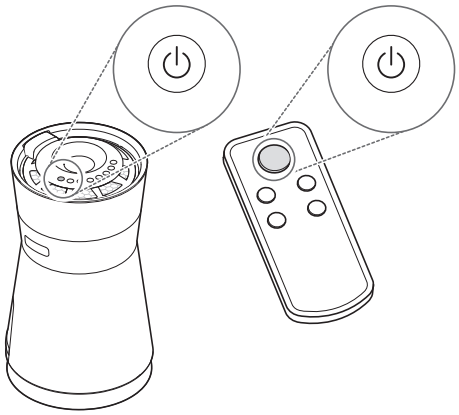

2 Press the **Mode** button to select an operating mode.

- Press the button repeatedly to cycle through the operating modes from **Purify** → **Humid Purify** → **Silent**.
- The mode shows in the status display panel.

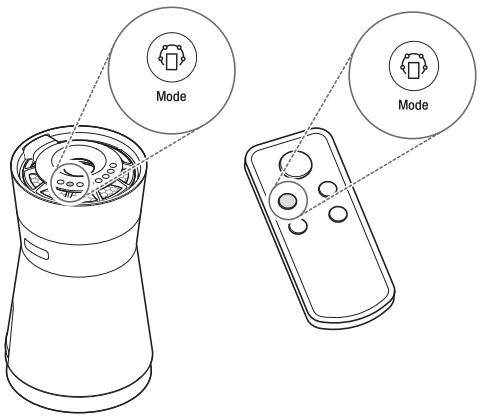

Note

- When the product is turned on for the first time, the default operating mode is **Purify** mode.
- The last operating mode is stored, even after power is lost.
- During the first 30 seconds after the product is started, appears in the display to indicate that the sensor is stabilizing. After the sensor stabilizes, the display shows the dust concentration level.

Humid Purify Mode

This mode improves indoor air using the humidifier and the air purifier.

1 Fill the water bucket before starting **Humid Purify** mode.

- For details, refer to page 24.

2 Press the **Start/Stop** button on the machine or the remote controller.

3 Press the **Mode** button to select **Humid Purify** mode.

- Press the button repeatedly to cycle through the operating modes from **Purify** → **Humid Purify** → **Silent**.
- The mode shows in the status display panel.

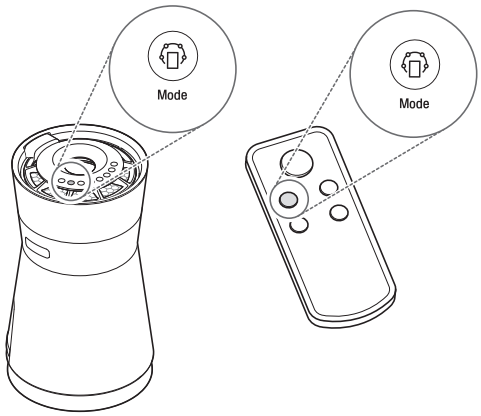

Note

- The humidifier uses fine particles, so the spray from the air outlet is not visible.
- The UV LED Lighting Water Treatment will run automatically for some time during **Humid Purify** mode to prevent the buildup of bacteria and mold in the water bucket. When the UV LED Lighting Water Treatment is running, **UV** appears in the display.
- In **Humid Purify** mode, the current humidity level appears in the status display panel.
- If **Humid Purify** mode is stopped, the Hygiene Drying function will run automatically for 1 to 1 ½ hours depending on the humidity level of the indoor air.
- For best results, use the Hygiene Drying function when using **Humid Purify** mode. For details, see page 24.
- Leave the product plugged in for at least 1 ½ hours after using **Humid Purify** mode to allow the Hygiene Drying function to work.
- Water drops may form on the product window when you activate **Humid Purify** mode. Initially, the water drops may be small but grow bigger and flow down as you use the product longer. This is the same natural phenomenon as water drops forming on windows when it rains.

Silent Mode

This mode minimizes noise during air purification.

Press **Start/Stop** to start operating, then press the **Mode** button to select **Silent** mode.

- Press the button repeatedly to cycle through the operating modes from **Purify** → **Humid Purify** → **Silent**.
- The mode shows in the status display panel.

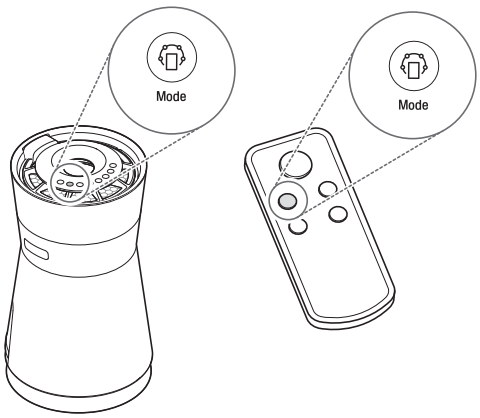

Adjusting the Fan Speed

Press the **Start/Stop** button to start operating, then press the **Speed** button to select the fan speed.

- Press the button repeatedly to cycle through the fan speeds from **Auto** → **Low** → **Mid** → **High**.
- The fan speed shows in the status display panel.

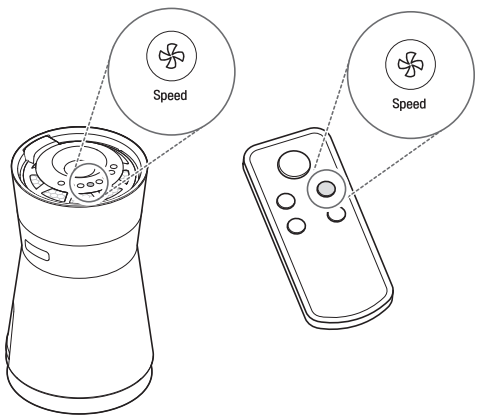

Note

- The default fan speed is Auto. **Auto** mode automatically adjusts the fan speed depending on the indoor air quality.
- The current fan speed appears in the status display panel.
- The fan speed cannot be adjusted in **Silent** mode.
- If you press the **Speed** button in **Silent** mode, the mode switches to **Purify** so you can adjust the fan speed.

Turbo Mode

This mode quickly purifies indoor air.

Press the **Start/Stop** button to start operation, then press the **Turbo** button.

- **Turbo** appears in the status display panel.

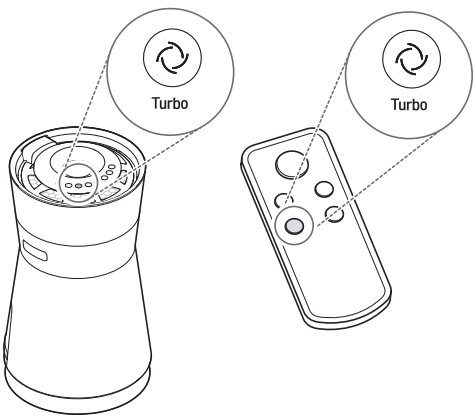

Note

- If the **Turbo** button is pressed in **Silent** mode, the operating mode switches to **Purify** to allow the **Turbo** function to run.
- **Turbo** function can be used only in **Purify, Humid Purify** mode.

Checking Air Quality

The overall air quality is indicated by color in the status display panel and the air quality indicator light.

Understanding Overall Air Quality

The overall air quality is indicated using four levels, each using a different color. The overall air quality depends on both the dust density and the odor level.

Overall air quality		Dust density (μg/m³)			Odor level	
Color	**Status**	**PM 10**	**PM 2.5**	**PM 1.0**	**Status**	**Level**
Red	Poor	255 or more	56 or more	56 or more	Very strong	4
Orange	Unhealthy	155 ~ 254	36 ~ 55	36 ~ 55	Strong	3
Yellow	Moderate	55 ~ 154	13 ~ 35	13 ~ 35	Normal	2
Green	Good	54 or less	12 or less	12 or less	Weak	1

- Overall air quality is indicated by the color of the icon in the status display panel and of the air quality indicator light.
- The overall air quality color indicates the worst level, either the dust density or the odor level.

Using the Air Quality Indicator Light

The overall air quality light changes color to green (good), yellow (moderate), orange (unhealthy) or red (poor) depending on the dust density and odor level.

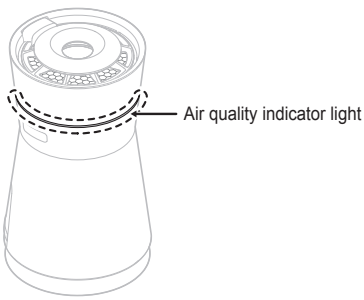

Note

After initial startup, the dust sensor stabilizes for 30 seconds and the odor sensor stabilizes for two minutes. The air quality light is white for 30 seconds, then it changes color to indicate the dust density level. Two minutes after starting, the light may change again if the odor level is worse than the dust density level.

Turning Air Quality Indicator Light On/Off

While the product is operating, press the **Light** button to turn the overall air quality light on or off.

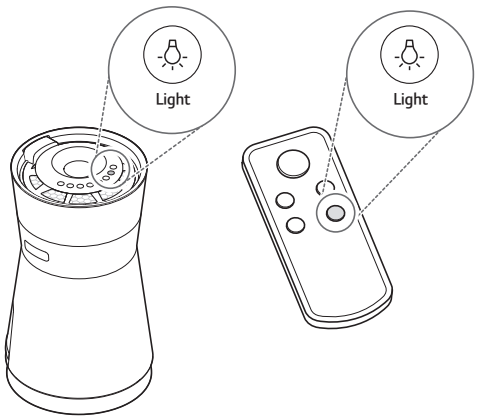

Note

- The air quality indicator light turns off when the Off Timer is set.
- If the Light button is pressed after the Off Timer is set, both the air quality indicator light and the display indicator light are activated.

Checking Air Quality in the Display

The overall air quality is indicated by the color of the icon in the display. If the overall air quality is unhealthy (orange) or poor (red), the display also shows the cause.

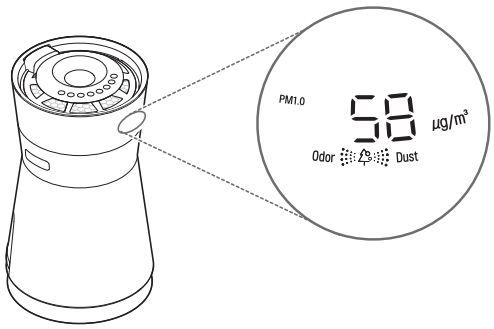

In the example above, the PM1.0 (super ultra-fine dust) density is shown as 58 micrograms per cubic meter, which is poor (red), so it must be higher than the other PM densities. Odor also appears in the display, so a strong odor is also detected.

Note

If the overall air quality is good (green) or moderate (yellow), the cause is not displayed.

Checking Dust Density and Humidity

While the product is on, press the **Indicator** button.

- Press the button repeatedly to quickly scroll through the sensor results: **PM10** → **PM2.5** → **PM1.0** → **humidity**.
- After the **Indicator** button is pressed, the status will display for about 10 seconds.

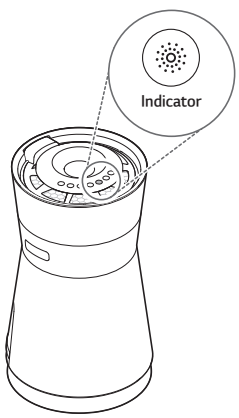

Note

- PM (particulate matter) density is displayed in increments of 1 unit, from 8 to 999. PM density values are based on the data sheet provided by the sensor manufacturer.
- The PM10 and PM2.5 air quality values follow those provided by the United States EPA (Environmental Protection Agency) for 2015.
  - The overall air quality level displayed on the product may differ from the level announced by the EPA.
- The PM1.0 density is displayed in the same manner as the PM2.5 density and is based on LG Electronics standards.
- The PM10 and PM2.5 densities displayed by the product could differ from the EPA forecast and from densities measured by other products or devices.
  - Differences in PM density values may be the result of different methods of measuring or differences in the actual PM density levels.
  - The PM density measurement was tested using LG Electronics' standard test materials.
- Using the product near a humidifier, mister, air-conditioner, or other device which generates steam or micro-particles could affect the PM densities.
- The overall air quality level is a result of both PM densities and the odor level. It may differ from the PM10, PM2.5, and PM1.0 density levels.
- Even two products placed in the same space could measure the PM10 density differently due to air circulation.
- The chemicals contained in air fresheners, perfumes, deodorizers, or cosmetics may affect the overall air quality display.
- The dust density displayed may change with environmental factors such as the presence of sofas, beds, carpets, vacuum cleaners, humidity, smoke, bugs, pets, or cooking oils.
- The PM densities may be affected by changes in the outside environment such as construction, heavy traffic, or pollen.
- The micro dust density could be higher near outside doors, windows, vents, or in areas where outside air enters.
- Use ONLY water to clean the sensor. Using anything else could cause product failure.
- The fine dust density could be affected by cooking or using humidifiers, sprays, or other products which generate steam or fine particles.

Using Air Quality Monitoring Function

Turn on the Air Quality Monitoring function to continuously measure and display the indoor air quality even when the product is turned off.

Press and hold the **Mode** button for about 3 seconds.

- (monitoring) appears in the status display panel.

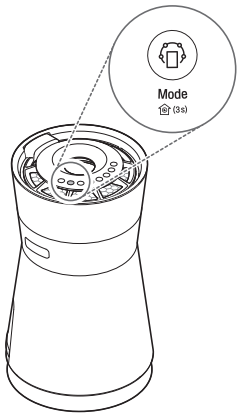

Note

- Press and hold the **Mode** button for 3 seconds to turn off Air Quality Monitoring.
- As long as the product is plugged in, the Air Quality Monitoring function can be turned on or off.
- If the Air Quality Monitoring function is on, PM density and humidity can be checked by pressing the **Indicator** button, and the Air Quality Indicator Light can be turned on or off by using the **Light** button even when the product is turned off.
- The Air Quality Monitoring function uses minimal power.

Sterilizing the Air Using Ions

Use the **Ionizer** button to remove various germs in the indoor air using ions.

Press the **Ionizer** button while the product is in operation.

- (ionizer) appears in the status display panel.

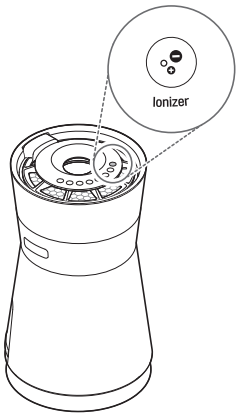

Note

You cannot use the Ionizer function when the product is not running.

Off Timer

Use the **Off Timer** button to set the product to **Sleep** mode and automatically turn off after a set number of hours.

While the product is on, press the **Off Timer** button.

- Press the button repeatedly to scroll through the selections, from **2 Off Timer** → **4 Off Timer** → **8 Off Timer** → **12 Off Timer** → Cancel sleep timer.
- In **Sleep** mode, only certain notice displays and the Sleep status text are displayed in the status display panel and the overall air quality indicator light is turned off.

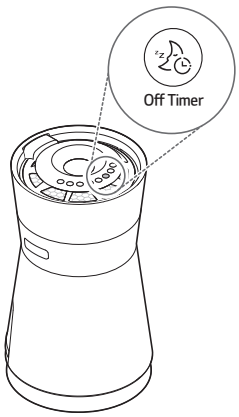

Note

- To help you sleep, the fan speed is set to **Low** for the first hour and is then set to **Auto**.
- In **Sleep** mode, you can adjust the fan speed manually using the **Speed** button.
- After setting the product in **Sleep** mode, pressing the **Off Timer** button once will check the set time, and pressing it repeatedly will cancel the sleep timer.
- The sleep timer setting is maintained even if there is a temporary loss of power (a blackout, etc.).

Control Lock

The Control Lock function locks all the control panel buttons, including the Power button, to prevent accidental operation by children or others. The controls can be locked even when the product is off.

Press and hold the **Light** button for about 3 seconds.

- (Lock) appears in the status display panel.

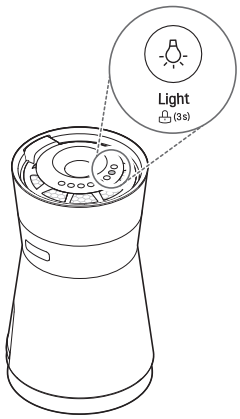

Note

When Control Lock is turned on, you will not be able to use the control panel until Control Lock is turned off. To turn off Control Lock, press and hold the **Light** button for about 3 seconds.

Hygiene Drying Function

The Hygiene Drying function is turned on by default. After **Humid Purify** mode is used, the Hygiene Drying function runs the fan for 1 – 1 ½ hours to dry the water bucket filters and prevent the buildup of mold or bacteria.

- When the Hygiene Drying function is running, (hygiene drying) appears in the status display panel.
- To turn off the Hygiene Drying function, press and hold the **Off Timer** and **Light** buttons for about 3 seconds.
- The Hygiene Drying function should not be turned off. Turning off the Hygiene Drying function may result in a buildup of mold, bacteria, and odor.

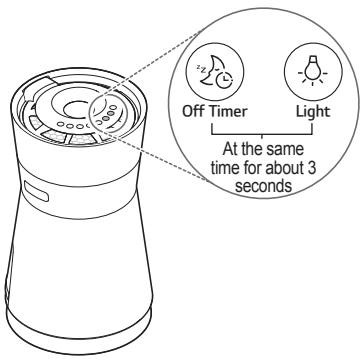

Note

- The Hygiene Drying function can be turned on or off by pressing and holding the **Off Timer** and **Light** buttons for 3 seconds.
- The product must be running in order to turn the Hygiene Drying function on or off.

Filling the Water Bucket

You can pour the water into the water bucket directly or through the Easy Fill Inlet.

Caution

Please be sure to use purified water.

Using the Easy Fill Inlet

To use, turn off the product, fill a container with water, and slowly pour the water into the inlet in the center of the top cover. Add water gradually until a chime sounds and the Full Water icon is lighted in the water level indicator.

- The water level indicators light up and chimes sound more and more quickly as the bucket gets close to full.
- The capacity of the water bucket is 3.2 liters.

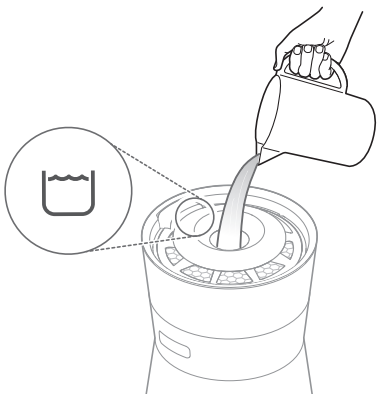

Caution

- Turn off the product before using the Easy Fill inlet.
- Do not fill the water bucket with the top cover flipped over.
- If water overflows the water bucket, there is a risk of electric shock or property damage. Pour water into the Easy Fill inlet slowly, paying attention to the chimes. Stop pouring immediately when the Full Water indicator appears.

Pouring Water into the Water Bucket

If you want to add a large amount of water at once, pour the water into the water bucket directly.

1 Detach the water bucket from the product and remove its filter from the water bucket.

- For more information on how to detach the filter from the water bucket, refer to **Maintenance** on page 30 and 32.

2 Fill the water bucket to the FULL line on the inside of the bucket.

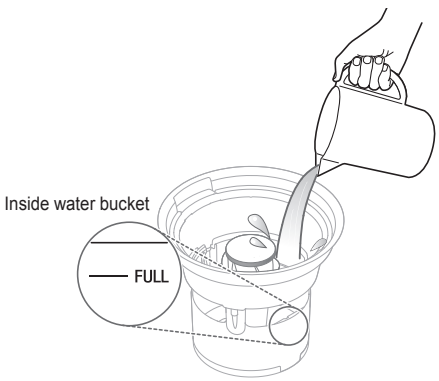

3 Mount the water bucket on the product.

- For more information on how to mount the water bucket, refer to **Assembling Water Bucket** on page 33.

Emptying the Water Bucket

To empty the water bucket, turn off and unplug the product. Remove the top cover and lift out the water bucket. Place the bucket on a waterproof surface. Remove the top and side water bucket filters from the bucket. Tilt the bucket to empty it.

- The bucket empties from the slots midway up the sides. Make sure the slots are over the sink when emptying the bucket.

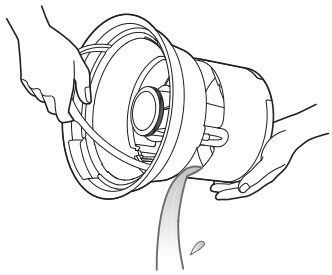

⚠ Caution

- Do not allow water to sit for long periods in the water bucket. Empty and dry out the bucket when not using **Humid Purify** mode.
- When operating the product in **Humid Purify** mode, empty the bucket at least once a day or after each use. Refill with clean water once a day or before each use. If water is left in the bucket, it may contaminate the bucket, and even refilling with clean water will not prevent odor issues.

Smart Functions

Installing the Application

Install the LG Smart ThinQ application on your smartphone to access the product's smart functions. The application can be found through the Google Play Store or Apple App Store. For more details on using the LG Smart ThinQ application, see the Help guide in the application.

Installing the Application

Open the Google Play Store or Apple App Store application on your smartphone, search for the LG Smart ThinQ application, and download and install the application on your phone.

Creating an Account

Registering through the LG Smart ThinQ application allows you access to various LG services. You must create an account to register and connect Wi-Fi models.

1. Open the LG Smart ThinQ application on your smartphone and select **Create account**.
2. Follow the directions in the application to enter your information, then select **OK**.
   - An authorization email is sent to the email address you entered.
3. Open the email, select **Authorize**, and your LG account registration is complete.

Note

The email address you enter during registration becomes your ID.

Using the Wi-Fi Function

These directions apply only to models with Wi-Fi.

Registering the Product

1. Open the LG Smart ThinQ application on your smartphone and select **Product Registration**.
2. Select your product from the list and follow the instructions in the application to connect the product to your home Wi-Fi network.
   - The Wi-Fi icon appears in the product's display panel when the product is connected to a Wi-Fi network.

Using the Application

You can use various functions through the application.

1. Open the application and select the air purifier.
2. Press **Menu** at the top right side of the smart phone screen, and select the desired function.
3. Follow the instructions in the application. For more assistance, see the Help guide in the installation.

Firmware Updates

Update the product's performance.

Smart Diagnosis™

Help troubleshoot product errors and issues using your product usage information. Diagnosis can be done right from the application or with the help of the LG Customer Information Center.

Settings

Change product settings and set up alerts when settings change.

Note

- Only the 2.4 GHz Wi-Fi frequency is supported.
- The Wi-Fi icon should appear in the product's display panel during the product registration.
- A wireless AP (access point) or router and internet cable are not included and must be installed before using the LG Smart ThinQ application.
- You can contact your ISP (internet service provider) to purchase and install a wireless AP. If you purchase and install a wireless AP yourself, follow the installation instructions included with the wireless AP.
- If the appliance is having trouble connecting to the Wi-Fi network, it may be too far from the AP or router. Purchase a Wi-Fi repeater (range extender) to improve the Wi-Fi signal strength.
- The Wi-Fi connection may not connect or may be interrupted because of the home network environment. Contact your service provider for assistance.
- Make sure to set the wireless AP SSID (the name of the Wi-Fi network) to English letters, numbers, or a combination of letters and numbers. Do not use special characters when naming the network or the information will not be processed correctly by the appliance.
- Be sure to choose your home wireless network and not a nearby network during setup. Unauthorized use of a Wi-Fi network is prohibited by law.
- This information is current at the time of publication. The application is subject to change for product improvement purposes without notice to users.

Wireless Specifications

Wireless LAN module Specifications	
Model	LCW-003
Frequency Range	2412 MHz to 2472 MHz
Output Power (max.)	IEEE 802.11b: 18.37 dBm IEEE 802.11g: 17.67 dBm IEEE 802.11n: 17.67 dBm

RF Radiation Exposure Statement

This equipment shall be installed and used at a minimum distance of 20 cm from the human body.

Open Source Software Notice

To obtain the source code contained in this product and developed under GPL, LGPL, MPL and other open source licenses, visit http://opensource.lge.com

In addition to the source code, all referred license terms, warranty disclaimers, and copyright notices are available for download.

LG Electronics will also provide open source code on CD-ROM for a charge covering the cost of performing such distribution (such as the cost of media, shipping, and handling) upon email request to opensource@lge.com. This offer is valid for three (3) years from the date on which you purchased the product.

Smart Diagnosis™

Should you experience any problems with your appliance, it has the capability of transmitting data to your smartphone using the LG Smart ThinQ application or via your telephone to the LG Customer Information Center.

Smart Diagnosis™ cannot be activated unless the appliance can be turned on. If the appliance is unable to turn on, then troubleshooting must be done without using Smart Diagnosis™.

Diagnosis with Wi-Fi

1. Make sure the appliance is connected to Wi-Fi.
2. Open the Smart ThinQ application and select the appliance from the list of registered products. Press the menu at the top right of the smartphone screen.
3. Select **Smart Diagnosis™** in the application and then select the **Smart Diagnosis™** button.
   - Check the results in the application.

If Wi-Fi Diagnosis Fails

- Smart Diagnosis™ may not succeed if the network connection is not good. Select **Retry** in the application to try again.
- If the Wi-Fi Smart Diagnosis™ fails again, select **Audible Diagnosis** in the application and follow the instructions to perform an audible diagnosis.

Note

For a more detailed diagnosis, contact an LG Customer Information Center.

Assistance with Smart Diagnosis™

If you need further assistance in troubleshooting the appliance, call an LG Customer Information Center at the number on the back cover of this manual.

1 When instructed to do so by the call center agent, press the **Indicator** button for about 5 seconds to start the Smart Diagnosis™ function.

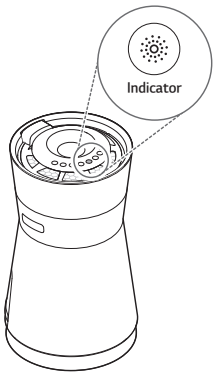

2 Hold your phone near the product.

Hold the mouthpiece of the phone toward the LG Signature logo on the front of the appliance.

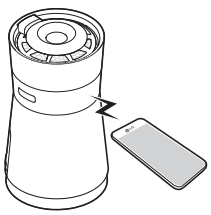

Keep the phone in place until the tone transmission has finished.

Note

- For best results, do not move the phone while the tones are being transmitted.
- If the call center agent is not able to get an accurate recording of the data, you may be asked to try again.

3 Once the transmission has finished, resume your conversation with the call center agent, who will be able to assist you in using the information transmitted for analysis.

Note

- The Smart Diagnosis™ function depends on the local call quality.
- The communication performance will improve and you may receive better results if you use a land line phone.
- Call quality problems may interfere with the ability to provide Smart Diagnosis™ service.
- Smart Diagnosis™ will not work if the Control Lock function is ON. Press and hold the **Light** button for 3 seconds to unlock the controls.

Maintenance

⚠ Caution

- Turn off and unplug the appliance before cleaning it. Otherwise, it may cause an electric shock.
- Do not spray water directly on the appliance.
- After cleaning, assemble in the reverse order of disassembly.
  - Assemble the top cover, top water bucket filter, side water bucket filter, water bucket, and main body in the order shown.
  - Make sure to align the arrows on the top and side water bucket filters with the arrow on the water bucket.
- Foreign substances may adhere to the water bucket and water bucket filters.
  - Foreign substances are the residues remaining after evaporation of the water and may have color depending on the type of water supplied (tap water or underground water).

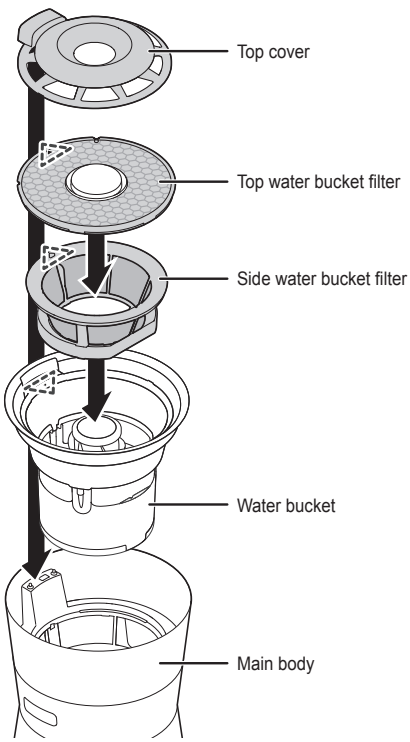

Scheduled Maintenance

Part	Clean/Refresh
 Water bucket	Clean every week
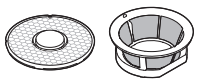 Water bucket filters	
 Ultra fine filter (pre-filter)	Clean every month
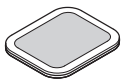 Deodorizing Black Filter	Refresh every 6 months
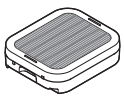 PM 1.0 Black Filter	Clean every 6 months
 PM1.0 (super ultra-fine dust) sensor	Clean every 2 months

Note

- The environment and frequency of use will affect how often maintenance is required. Clean the filters more often if used in an area with a lot of dust.
- Failure to perform regular maintenance may result in mold or bacterial growth and odor.
- To replace any of the filters, call an LG Customer Information Center.
- Calls for service caused by dirty filters are not covered by the warranty and will be charged to the user.
- If the PM 1.0 Black Filter is contaminated, it may cause an abnormal noise. If you hear an abnormal noise, clean the PM 1.0 Black Filter.
  (Refer to **Cleaning the PM 1.0 Black Filter** page 35.)
- If E15 and ▣/NEEd CLEAn are displayed on the status panel, clean the PM 1.0 Black Filter.
- If you smell an odor in the water bucket filters, use citric acid to clean them. Clean the water bucket whenever you pour water directly into it.

Status Display Panel Error Codes

The following error codes may be displayed on the status display panel.

Error Code		Action
	OPEN	• Properly mount the top cover on the main body. • Check for foreign objects caught between top cover and main unit contact connector.
	OPEN	• Properly mount the deodorizing Black Filter in the main body.
	OPEN	• Properly mount the top and side water bucket filters in the water bucket. • Make sure arrow on top and side water bucket filters is aligned with arrow on water bucket. • Properly mount top cover. • Check for foreign objects caught between top cover and main unit contact connector.
	NEEd CLEAN	• Clean the water bucket filters.
	OPEN	• Properly mount the deodorizing Black Filter and PM 1.0 Black Filter and the filter tray in the main body.
	NEEd CLEAN	• Refresh the deodorizing Black Filter. • Clean the PM 1.0 Black Filter.
	OPEN	• Properly mount the ultra fine filter(pre-filter).
	NEEd CLEAN	• Clean the ultra fine filter (pre-filter).
Lo		• Ambient humidity level is 30% or less.
Hi		• Ambient humidity level is 90% or more.
E15		• Clean the PM 1.0 Black Filter.

Cleaning the Exterior

Clean the product's exterior with the ultra-fine cloth provided as an accessory.

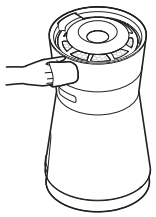

Caution

- Do not use alkaline detergents to clean the product.
- Do not attach stickers or use sulfuric acid, hydrochloric acid, or organic solvents such as thinners, lamp oil, or acetone on the product's surface. Doing so may damage the surface.
- Do not allow water inside the main body of the product.

Cleaning the Top Cover

Clean the top cover with the ultra-fine cloth provided as an accessory.

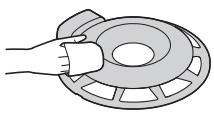

Caution

Do not spray water on or into product. Doing so will cause product failure.

Cleaning the Watering System

The water bucket, water bucket filters, and Watering Engine™ can easily be separated from the main body for cleaning using the handle on the water bucket.

Caution

Follow these instructions to prevent odors.

- Empty the water bucket if using only the air purifier mode.
- Replace the water in the water bucket daily if using **Humid Purify** mode, or before each use.
- Clean the water bucket filters frequently to prevent mold and bacteria growth.

Note

- Remove the top cover before starting the cleaning process.
- Use the handle to remove the water bucket.
- Follow the **Regular Watering System Cleaning** instructions to remove white hard water stains on the water bucket or water bucket filters.

Regular Watering System Cleaning

Clean weekly to prevent mold or bacteria growth and odor.

1 Remove the top cover and lift the water bucket out by the handle.

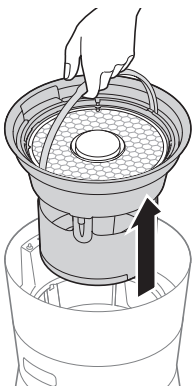

2 Lift and remove the top and side water bucket filters.

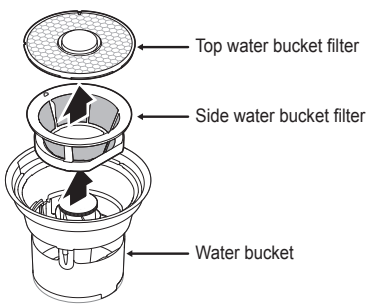

3 Rinse the inside and outside of the water bucket with clean water.

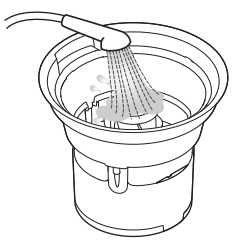

4 Dry the water bucket with a soft cloth.

- Use the ultra-fine cloth provided to dry the window on the bucket.

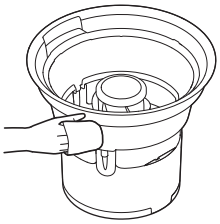

5 Rinse off the top and side water bucket filters with clean water.

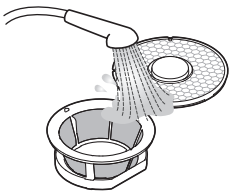

6 To use the product immediately, shake off the excess water. If storing the product or not using it immediately, place the filters in a sunny spot and allow to dry completely.

7 Reassemble the water bucket filters in the water bucket.

⚠ Caution

- Use clean tap water. Do not use water that is hotter than 40°C to avoid product deformation or failure.
- The water bucket's window is easily scratched. Clean it using the ultra-fine cloth provided. Keep the cloth clean and free of foreign objects.
- Do not use steel wool or abrasive pads to clean the water bucket.
- A new ultra-fine cloth can be purchased through the LG Electronics Customer Information Center.

Cleaning Water Bucket Filters Using Citric Acid

1 Dissolve citric acid in water and soak the water bucket filters in the solution for 30 minutes.

- Citric acid is a relatively strong acid. So, you need to wear rubber gloves when using it.
- Recommended: Use 30 g citric acid in 10 L water.

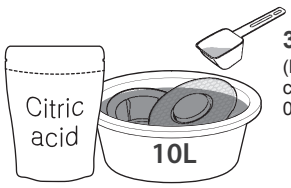

30 g
(Recommended concentration of citric acid: 0.3%)

2 Shake the water bucket filters to remove foreign substances.

- If you cannot remove the foreign substances, soak the water bucket filters in the citric acid solution mentioned above for 1 to 2 more hours. Or you may scrub the water bucket filters with a cleaning brush to remove the foreign substances.

3 Thoroughly rinse the filters with tap water to remove any remaining citric acid.

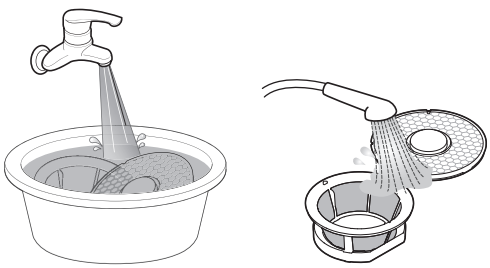

4 If the filters are to be used immediately, shake off excess water and reassemble. If storing the product or not using it immediately, place the filters in a sunny spot and allow to dry completely.

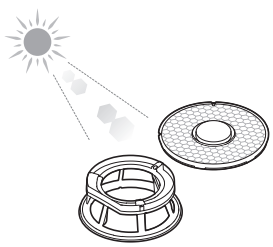

⚠ Caution

- If citric acid remains on the filter, it may cause sudsing or odor during operation.
- Use of neutral detergent may result in severe sudsing. For this reason, citric acid is preferred. (Citric acid can be purchased in the market.)

Assembling Water Bucket

After cleaning or filling the water bucket, reassemble it as follows:

1 Mount the water bucket filters in the water bucket.

- First place the side filter in the bucket, then the top filter, aligning the arrow on the filter with the arrow on the water bucket.
- If the filters do not mount easily in the bucket, lift and realign them until they lower easily into place.

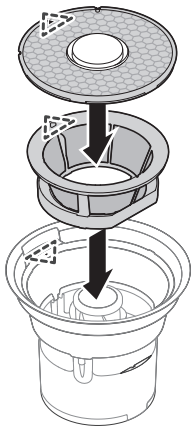

2 Use the handle to carefully lower the water bucket into the body of the product.

- Make sure the bucket is aligned so that the contact connectors on the body slide through the slot in the top of the bucket.

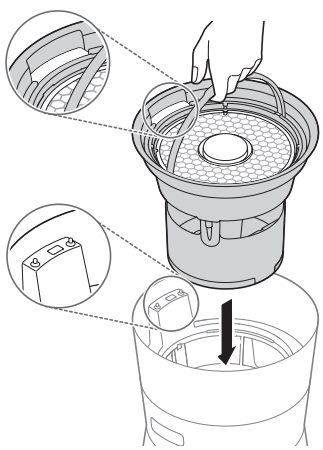

3 Put the top cover back on.

- Align the top cover so that its contact connectors meet the contact connectors on the body of the product.

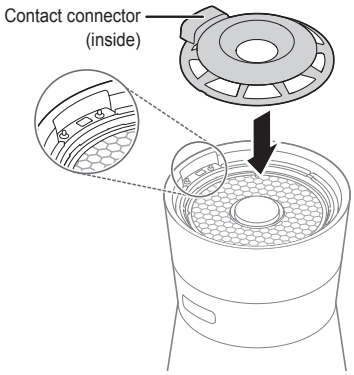

Note

If the water bucket and cover are not properly mounted, /OPEN appears in the display, and the Watering Engine™ will not work.

Cleaning the Air Purifier Filters

Cleaning the Ultra Fine Filter (Pre-filter)

1 Pull out the ultra fine filter (pre-filter) located beneath the filter tray.

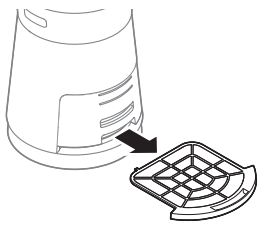

2 Rinse the ultra fine filter (pre-filter) under running water.

- If the ultra fine filter (pre-filter) is very dirty, wash in a solution of water and neutral detergent.

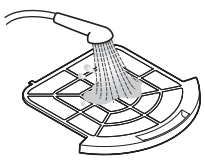

3 Place out of direct sunlight and allow to dry completely.

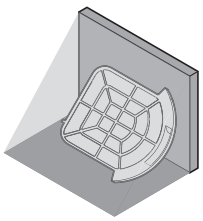

4 Insert the ultra fine filter(pre-filter) in the main body.

- Insert the ultra fine filter(pre-filter) with the handle facing up. If the filter or the filter tray are not assembled properly, /OPEN will appear in the status display panel.

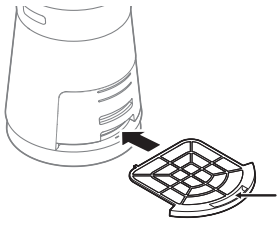

Refreshing the Deodorizing Black Filter

1 Press the filter tray release button to open the filter tray.

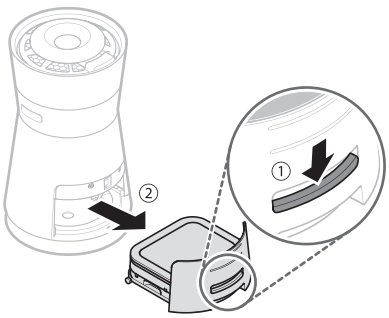

2 Open the filter tray and separate the deodorizing Black Filter.

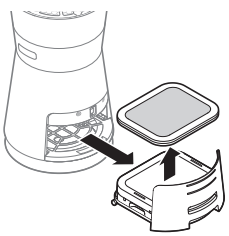

3 Place the deodorizing Black Filter in a shaded area with good air ventilation for about 3 hours. Avoid direct sunlight.

- At night, expose the deodorizing Black Filter to artificial light for about 3 hours to refresh it.
- The deodorizing Black Filter is refreshed by light.

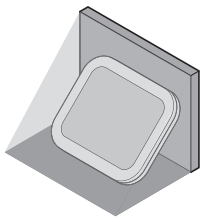

4 Place the deodorizing Black Filter in the filter tray.

- Be sure to align the slots on the bottom of the deodorizing Black Filter with the tabs on the filter beneath it.

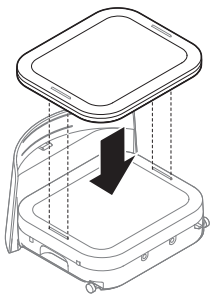

5 Insert the filter tray into the product.

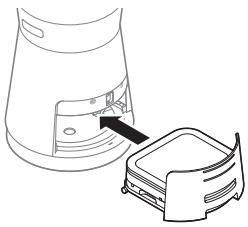

Note

Use a vacuum cleaner to remove the foreign substances attached to the deodorizing Black Filter.

⚠ Caution

- Do not wash the deodorizing Black Filter with water. It may shorten the filter lifespan or stain the product.
- The lifespan of the deodorizing Black Filter may be reduced depending on the usage environment and it may need to be replaced.

Cleaning the PM 1.0 Black Filter

1 Press the filter tray release button to open the filter tray.

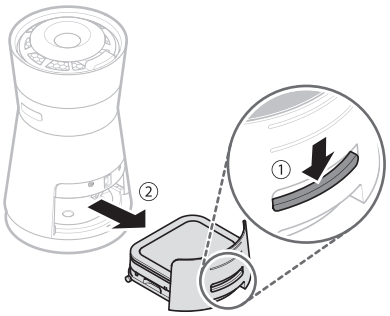

2 Slide the filter tray out completely and remove the PM 1.0 Black Filter from under the deodorizing Black Filter.

- Do not attempt to separate the two sections of the PM 1.0 Black Filter.

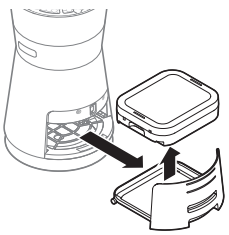

3 Soak only the PM 1.0 Black Filter in a solution of water and neutral detergent for about 30 minutes. (The deodorizing Black Filter cannot be washed.)

- Make sure the neutral detergent is completely dissolved in warm water (35 – 40°C).
- Fully immerse the PM 1.0 Black Filter in the soapy water.

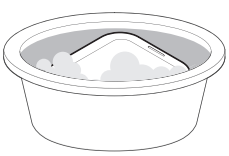

4 Soak the filter in clean water and then rinse under running water to make sure no detergent residue remains.

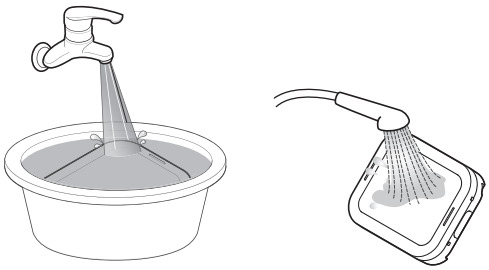

Caution

- Rinse thoroughly after washing until no detergent bubbles appear. Detergent residue left on the filter may shorten its lifespan or cause product malfunction.
- Take care not to damage the film or wires inside the filter during cleaning. If the filter is damaged, stop using the product and call for service.
- Do not attempt to disassemble the top and bottom sections of the PM 1.0 Black Filter.

5 Prop the filter at an angle out of direct sunlight and allow to dry completely for 12 – 24 hours.

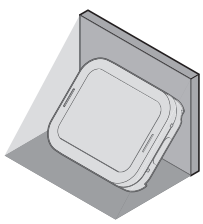

6 Place the PM 1.0 Black Filter back in the filter tray.

- Assemble the filter with the two circles on its side facing as shown.

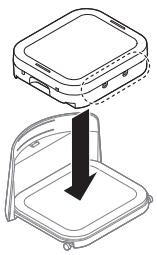

7 Place the deodorizing Black Filter on top of the PM 1.0 Black Filter, aligning its slots with the tabs on the top of the ultra fine filter set.

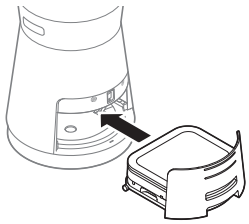

Note

The PM 1.0 Black Filter is electrically charged. During the initial startup you may hear a charging sound.

Cleaning the Dust Sensor

The PM1.0 (super ultra-fine dust) sensor is used to detect dust density levels. Clean it periodically for best performance.

1 Press the filter tray's release button to slide open the filter tray. Remove the tray completely.

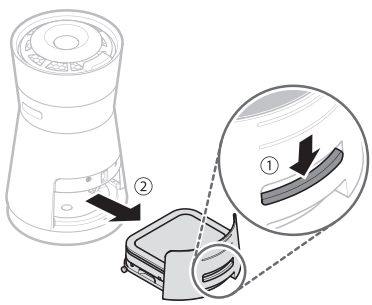

2 Dampen one end of a cotton swab and use it to clean the lens. Use the dry end of the cotton swab to wipe the lens dry. You can also use cotton balls.

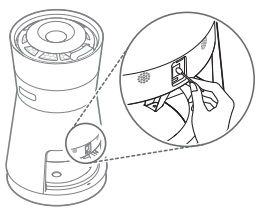

3 Insert the filter tray into the product.

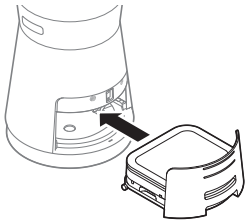

Note

Only use water to clean the sensor. Use of anything else may cause product failure.

Cleaning the Watering Engine™

If water is not coming out of the Watering Engine™, it may need to be cleaned.

1 Remove the top cover and use the handle to lift out the water bucket. Remove the top and side water bucket filters to reveal the Watering Engine™.

2 Turn the lid of the Watering Engine™ counterclockwise to remove it.

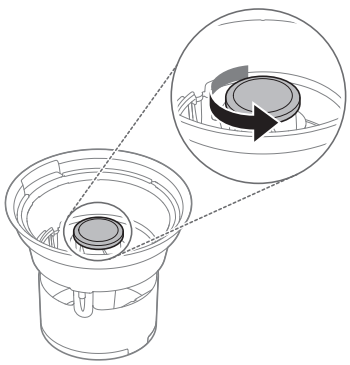

3 Lift up and remove the Watering Engine™ from the water bucket.

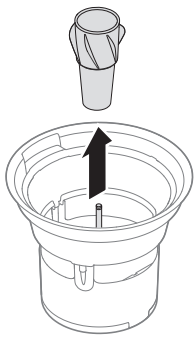

4 Clean the Watering Engine™.

- Wipe the interior and exterior with a soft cloth.
- Remove foreign objects in the holes using a paper clip or small brush.

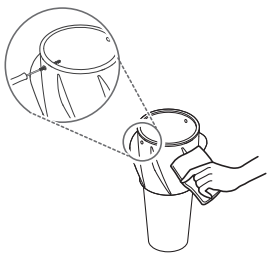

Storage

If the product will not be used for a long period, allow it to dry completely and then store it in a dry, shady place.

Note

- Empty the water bucket.
- Clean the water bucket, water bucket filters, Watering Engine™, etc. before storing.
  Follow the instructions to prevent mold and bacteria growth or odors.

1 Run the air purifier in **Purify** mode for an hour or more on a sunny day.

- This will help to remove moisture and mold from inside the product.

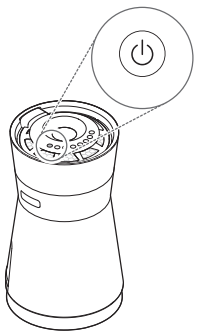

2 Turn off and unplug the appliance.

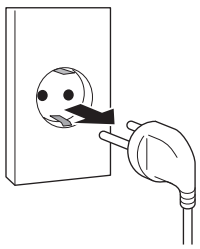

3 Cover the appliance with a dust sheet to prevent dust, bugs, or foreign objects from getting into it, and store it in a dry, shady spot.



⚠ Caution

Do not store the appliance in a wet or humid area, or in direct sunlight. Doing so may result in product deformation, malfunction, or mold growth and odor.

Before Calling for Service

If you experience problems with the appliance, checking the following chart before calling for service may save you time and money.

Problem	Possible Causes	Solution
Product is not working.	**Power cord is unplugged.**	• Correctly insert plug into outlet. • Check other appliances to make sure outlet is working and power is on at main.
Fan is noisy even on the lowest speed.	**Ultra fine filter (pre-filter) is clogged.**	• Thoroughly clean the ultra fine filter (pre-filter). See page 34.
	Dust has built up in the PM 1.0 Black Filter.	• Clean the PM 1.0 Black Filter. See page 35.
Air purification does not work well.	**Indoor air has a strong odor or is extremely dusty.**	• Do not use air purifier instead of a range hood or vent. Ventilate area before using air purifier.
	Dust has built up in the ultra fine filter (pre-filter).	• Clean the ultra fine filter (pre-filter). See page 34.
	Dust has built up in the PM 1.0 Black Filter.	• Clean the PM 1.0 Black Filter. See page 35.
	The install location is too large.	• Performance may suffer in areas where there is a constant inflow of outdoor air.
	Nearby objects are blocking the airflow.	• Move the objects or relocate the air purifier.
	Product is installed in a corner.	• Move the air purifier away from the corner so the airflow is not restricted.
Product is making clunking sound.	**Water bucket is not properly mounted.**	• Remove and properly reassemble the water bucket.
The overall air quality indicator light does not change color when there is a strong odor.	**The overall air quality indicator light may already be orange or red.**	• The overall air quality indicator light shows the odor level or the PM1.0 (super ultra-fine dust) density, whichever is worse. • The odor sensor is designed to detect harmful gases. Strong food odors may not register as harmful, but the deodorizing Black Filter will remove them.

Problem	Possible Causes	Solution
The overall air quality indicator lamp stays red.	**Try moving the air purifier to a different room.**	• If the odor is very strong, the air purifier may not be able to remove it. • Clean the sensor. • Unplug the product, wait for 1 minute, then plug the product in again.
	Something was sprayed on or near the air purifier.	• Do not spray hair products, perfume, cleaners, cooking oil or other products near the air purifier.
Control panel buttons do not work.	**Status display panel shows Control Lock icon.**	• Press and hold the **Light** button for 3 seconds to deactivate Control Lock.
Fine dust density indicator does not change.	**The sensor is dirty.**	• Clean PM1.0 (super ultra-fine dust) sensor.
	Product is in an enclosed space.	• If there is little inflow of outside air, the density levels may not change.
Fine dust density remains high.	**Product is near an outside door or window.**	• If the product is near a constant inflow of outside air, the dust density may remain high.
Overall air quality and dust density levels are different.	**"Odor" appears in the status display panel.**	• The overall air quality indicator shows the combined levels of odor and dust. See page 20. • If the dust density is low, but the odor level is high, the light indicates the worse level.
Cause for overall air quality indicator level (odor or dust) does not appear in display.	**Overall air quality indicator light is green or yellow.**	• The cause for the overall air quality level only shows in the status display panel when the dust density or odor level is orange or red.

Problem	Possible Causes	Solution
The water bucket level does not change during Humid Purify mode.	**Water bucket filters are not assembled properly.**	• Properly assemble the top and side water bucket filters in the water bucket.
	The water bucket filters are dirty or clogged.	• Clean the water bucket filters. See page 31.
	The Watering Engine™'s holes are clogged.	• Clean the Watering Engine™. See page 37.
	It is raining or it is cold indoors.	• The humidifier uses less water so the amount of water in the bucket decreases slowly.
The air quality window is not clear or condensation is not forming during Humid Purify mode.	**The holes in the Watering Engine™ are clogged.**	• Clean the Watering Engine™. See page 37.
	The air quality window is dirty.	• Clean the inside and outside of the window on the water bucket using the ultra-fine cloth provided. See page 31.
Humidity level does not rise.	**Room is too large.**	• Use in a smaller or more enclosed area.
	Water bucket is empty.	• Fill the water bucket.
	Dirt has built up on the water bucket filters.	• Clean the water bucket filters. See page 31.
Displayed humidity level does not agree with another device.	**Different measuring methods, or air circulation.**	• The product measures and displays the relative humidity according to the temperature. The humidity measured by a hygrometer or by two products, even in the same space, may differ because of installation height, air circulation, or temperature difference.

Problem	Possible Causes	Solution
An odor is coming from the air outlet or filter.	**The product is new and recently installed.**	• This is the smell of activated carbon (charcoal). It should dissipate after 1 – 2 weeks of use and is not harmful to humans.
	Product is used in smoky or smelly area.	• Product performance may suffer if used to replace a range hood or vent. Ventilate smoke or strong odors before using.
	Water in water bucket is contaminated with dirt, mold, or bacteria.	• Prevent odors by cleaning water bucket and replacing water regularly. See page 32. • If water bucket has an unpleasant odor, clean bucket immediately.
	Water bucket filters are contaminated by dirt, mold, or bacteria.	• Prevent odors by cleaning the water bucket filters regularly. See page 32. • If the filters have an unpleasant odor, clean them immediately.
	The deodorizing Black Filter smells bad.	• The deodorizing Black Filter may need to be refreshed. See page 34. • Filters may need to be cleaned/replaced more frequently, depending on the usage environment.
	The product is installed in an area with frequent strong odors.	• Product's lifespan may be decreased if constantly used near where food is fried or broiled. • Use a range hood/vent or open windows or doors to vent smoke, oil, and odors produced by cooking. Use product only after ventilation.

LG SIGNATURE