LG
Life's Good

LG MyView Smart Monitor

25SR50F 27SR50F
32SR50F

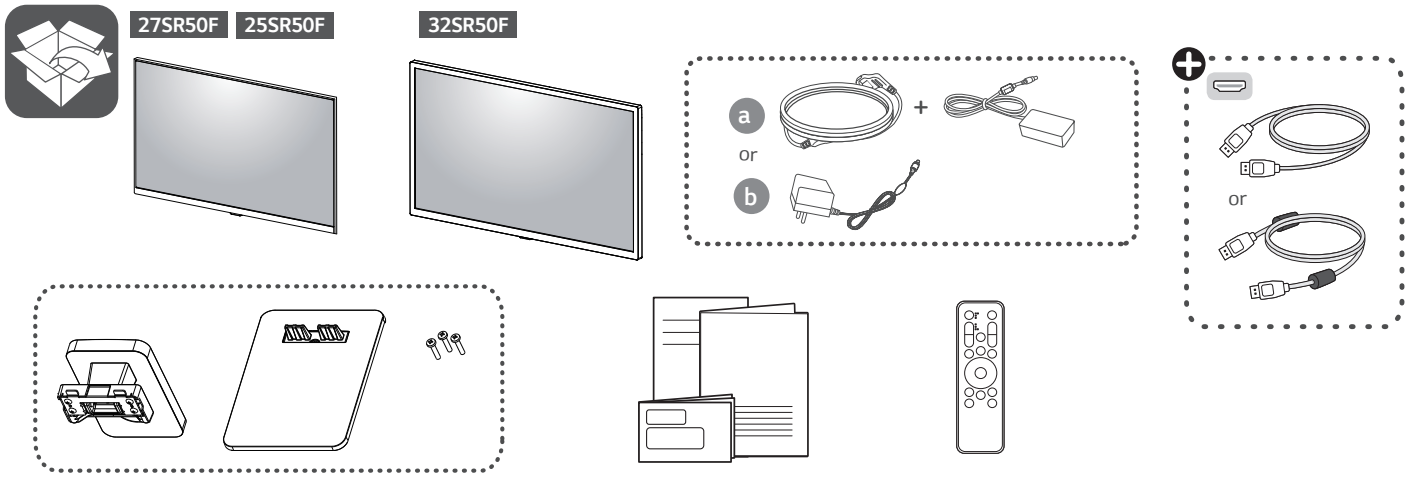

You can download manuals from the LGE website.
OWNER'S MANUAL AND REGULATORY INFO. are available at *https://www.lg.com/au/support/manuals.*
PLEASE READ SAFETY INFORMATION BEFORE INSTALLATION AND USE. SCAN QR CODE TO ACCESS.

⊕ Depending on country

MBM67549907
(2311-REV01)

It is recommended that use the supplied components.

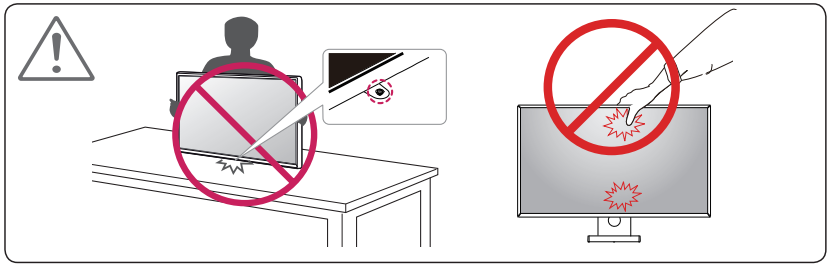

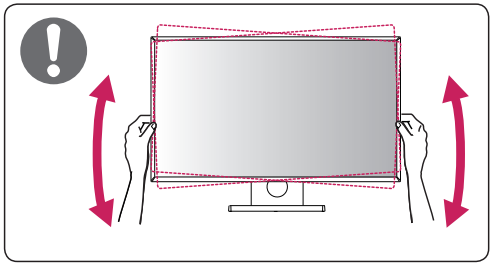

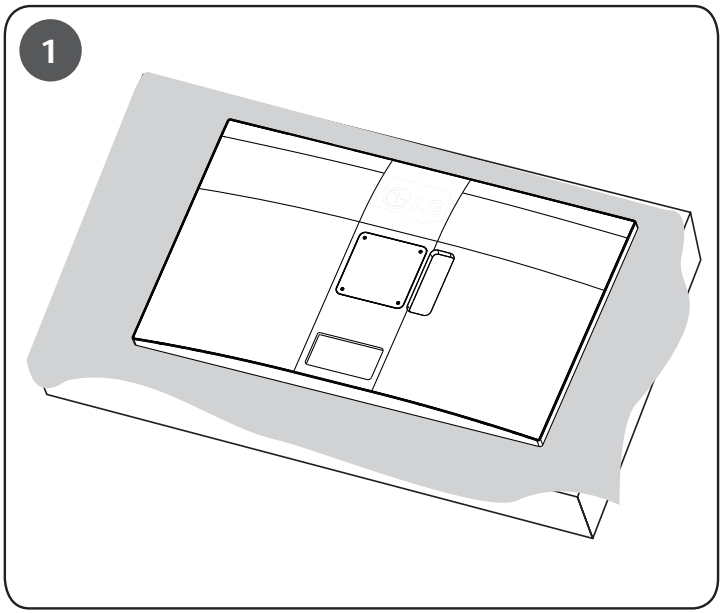
1

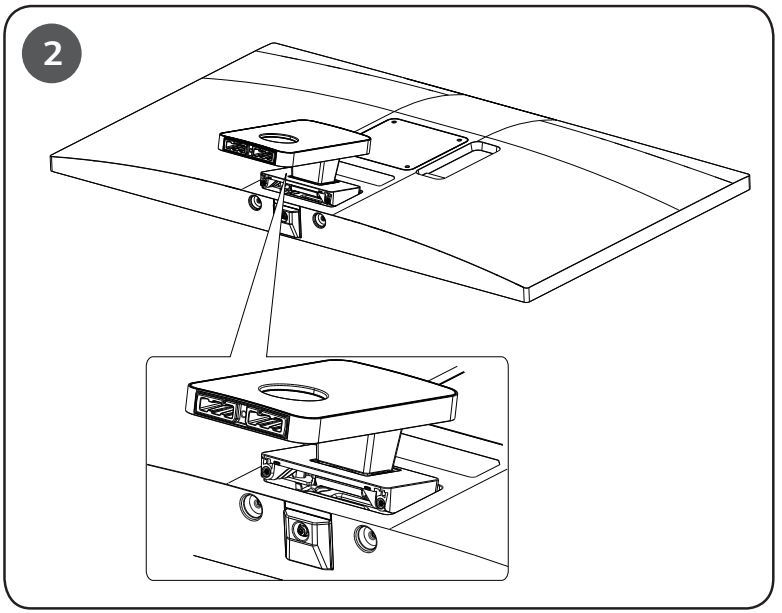
2

3

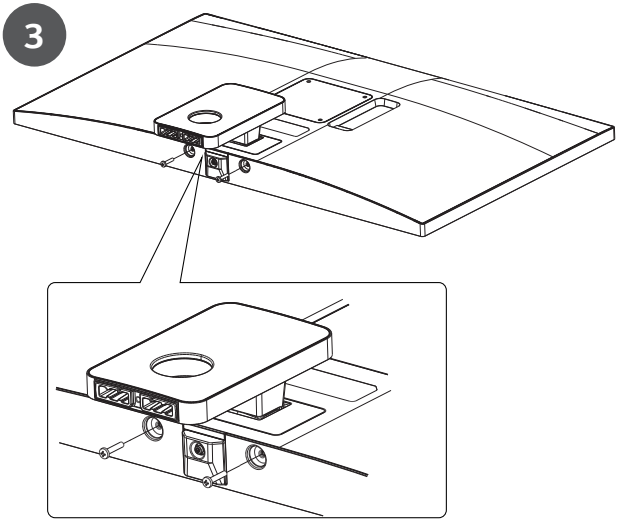

4

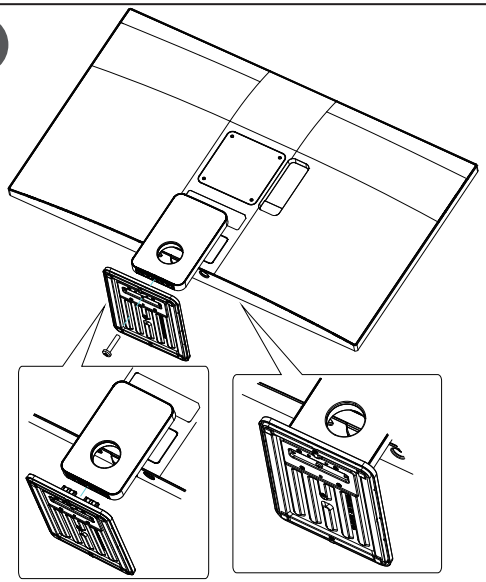

5

25SR50F
27SR50F

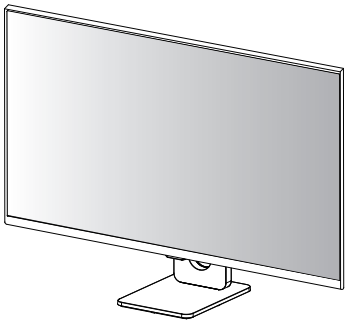

32SR50F

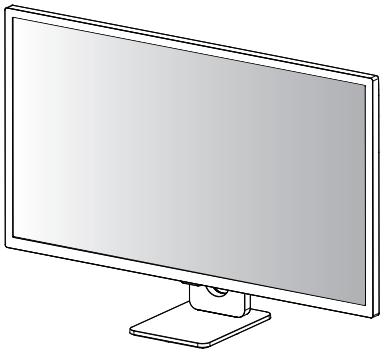



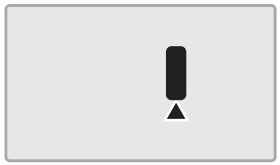

	25SR50F	27SR50F 32SR50F
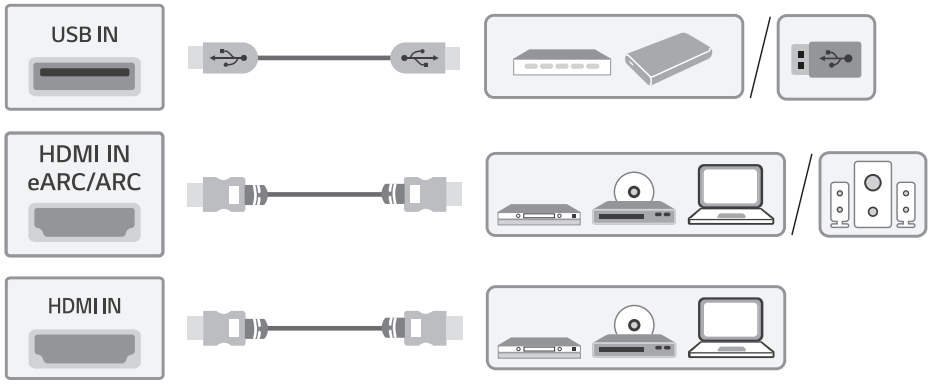	●	●
	●	

- Using a DVI to HDMI / DP (DisplayPort) to HDMI cable may cause compatibility issues.
- The USB(PC) port on the product functions as a USB hub.
- Make sure to use the supplied cable. Otherwise, this may cause the device to malfunction.

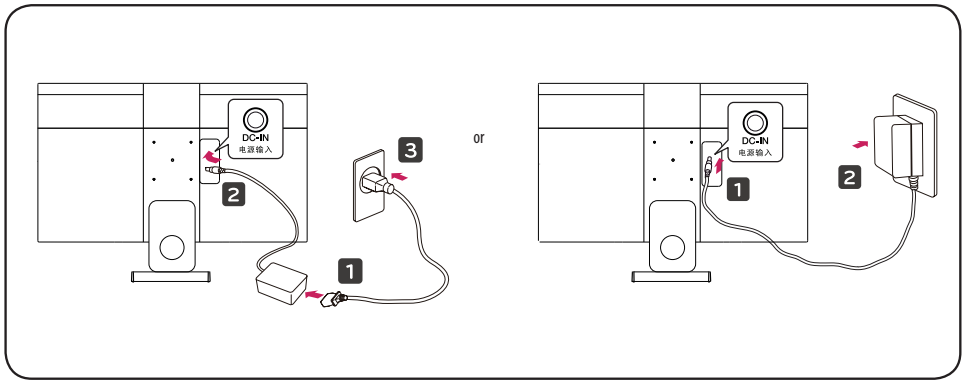

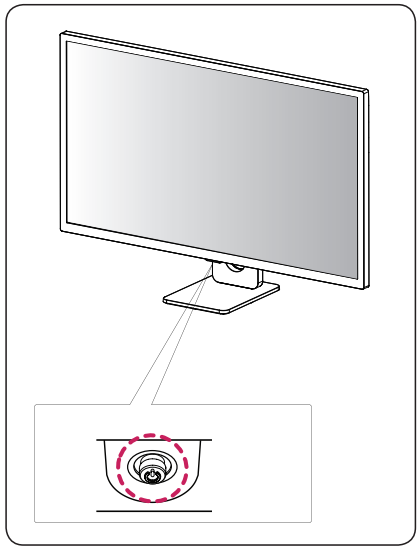

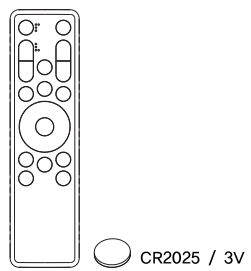

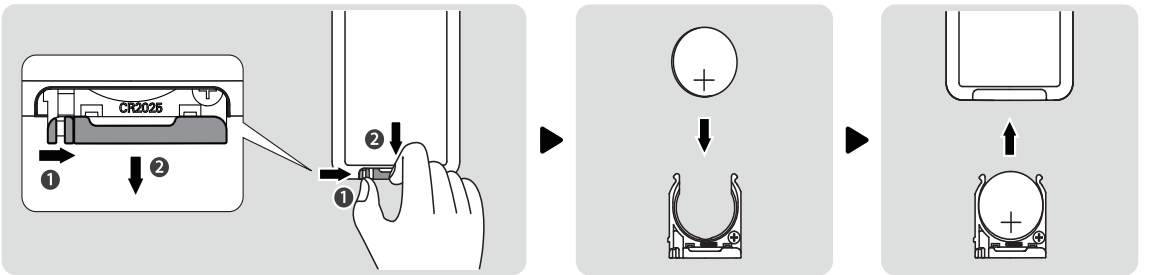

CAUTION

The battery is hazardous and is to be kept away from children (whether the battery is new or used).
The lithium battery can cause severe or fatal injuries in 2 hours or less if it is swallowed or placed inside any part of the body.
Medical attention should be sought immediately if it is suspected the battery has been swallowed or placed inside any part of the body.

Wireless module(LGSBWAC23)Specifications

(Wi-Fi/Bluetooth supported models only.)

Wireless LAN (IEEE 802.11a/b/g/n/ac)	
Frequency range	Output Power (Max.)
2,400 to 2,483.5 MHz	19.5 dBm
5,150 to 5,725 MHz	19.0 dBm
5,725 to 5,850 MHz	13.9 dBm
Bluetooth	
Frequency range	Output Power (Max.)
2,400 to 2,483.5 MHz	10.0 dBm

As band channels can vary per country, the user cannot change or adjust the operating frequency. This product is configured for the regional frequency table.
For consideration of the user, this device should be installed and operated with a minimum distance of 20 cm between the device and the body.

(Australia and New Zealand region only)

R-NZ

The use of the 5,150 – 5,350 MHz band is restricted to indoor use only.
This restriction exists in the countries Australia (AU) and New Zealand (NZ).
(For Wi-Fi/Bluetooth built-in model or Wi-Fi built-in model)
“RF Radiation Exposure Statement
This equipment shall be installed and used at a minimum distance of 20 cm from the human body.”