LG
Life's Good

OWNER'S MANUAL

NEW TYPE CYCLONE VACUUM CLEANER

This information contains important instructions for the safe use and maintenance of the vacuum cleaner. Especially, please read all of the information on page 3, 4, 5 for your safety. Please keep this manual in an easily accessible place and refer to it anytime.

VK76*****
VK53*******
VC53*******
VC43*******

MFL69344221

www.lg.com

Copyright © 2017 LG Electronics. All rights reserved.

Table of contents

Important safety instructions ..... 3~5

How to use 6

Assembling vacuum cleaner ..... 6~8

Operating vacuum cleaner ..... 9~10

Using carpet and floor nozzle / Hard Floor Nozzle 11

Using Hard Floor Nozzle / Turbine Nozzle 12

Using All Floor nozzle and mini turbine nozzle 13

Cleaning all floor nozzle 14

Using Turbine Nozzle 15

Cleaning Turbine nozzle 16

Using sani punch nozzle ..... 17~21

User's guide for Mop Nozzle 22

Using accessory nozzles ..... 23~24

Emptying dust tank 25

Cleaning dust tank 26

Cleaning filters and air guide tank 27

Cleaning exhaust filter 28

Assembling Tank Cover & Tank assembly 29

What to do if your vacuum cleaner does not work 30

What to do when suction power decreases 30

IMPORTANT SAFETY INSTRUCTIONS

Read and follow all instructions before using your vacuum cleaner to prevent the risk of fire, electric shock, personal injury, or damage when using the vacuum cleaner. This guide do not cover all possible conditions that may occur. Always contact your service agent or manufacturer about problems that you do not understand.



This is the safety alert symbol.
This symbol alerts you to potential hazards that can kill or hurt you and others.
All safety messages will follow the safety alert symbol and either the word “WARNING” or “CAUTION.”
These words mean:

⚠ WARNING This symbol will alert you to hazards or unsafe practices which could cause serious bodily harm or death.

⚠ CAUTION This symbol will alert you to hazards or unsafe practices which could cause bodily injury or property damage.

⚠ WARNING

1. This appliance is not intended for use by persons (including children) with reduced physical, sensory or mental capabilities, or lack of experience and knowledge, unless they have been given supervision or instruction concerning use of the appliance by a person responsible for their safety.
2. Children should be supervised to ensure that they do not play with the appliance.
3. If the supply cord is damaged, it must be replaced by LG Electronics Service Agent in order to avoid a hazard
4. This appliance can be used by children aged from 8 years and above and persons with reduced physical, sensory or mental capabilities or lack of experience and knowledge if they have been given supervision or instruction concerning use of the appliance in a safe way and understand the hazards involved. Children shall not play with the appliance. Cleaning and user maintenance shall not be made by children without supervision.

IMPORTANT SAFETY INSTRUCTIONS

⚠ WARNING

- **Do not plug in if control switch is not in OFF position.**
  Personal injury or product damage could result.
- **Keep children away and beware of obstructions when rewinding the cord to prevent personal injury.**
  The cord moves rapidly when rewinding.
- **Disconnect electrical supply before servicing or cleaning the unit or when cleaner is not in use.**
  Failure to do so could result in electrical shock or personal injury.
- **Do not use vacuum cleaner to pick up anything that is burning or smoking such as cigarettes, or hot ashes.**
  Doing so could result in death, fire or electrical shock.
- **Do not vacuum flammable or explosive substances such as gasoline, benzene, thinners, propane (liquids or gases).**
  The fumes from these substances can create a fire hazard or explosion. Doing so could result in death or personal injury.
- **Do not handle plug or vacuum cleaner with wet hands.**
  Doing so could result in death or electrical shock.
- **Do not unplug by pulling on cord.**
  Doing so could result in product damage or electrical shock. To unplug, grasp the plug, not the cord.
- **Keep hair, loose clothing, fingers, and all parts of the body away from openings and moving parts.**
  Failure to do so could result in electrical shock or personal injury.
- **Do not pull or carry by cord, use cord as a handle, close a door on cord, or pull cord around sharp edges or corners. Do not run vacuum cleaner over cord. Keep cord away from heated surfaces.**
  Failure to do so could result in electrical shock or personal injury or fire or product damage.
- **The hose contains electrical wires. Do not use it if it is damaged, cut or punctured.**
  Failure to do so could result in death,or electrical shock.
- **Do not allow to be used as toy. Close attention is necessary when used by or near children.**
  Personal injury or product damage could result.
- **Do not use the vacuum cleaner if the power cord or plug is damaged or faulty.**
  Personal injury or product damage could result. In these cases, contact LG Electronics Service Agent to avoid hazard.
- **Do not use vacuum cleaner if it has been under water.**
  Personal injury or product damage could result. In these cases, contact LG Electronics Service Agent to avoid hazard.
- **Do not continue to vacuum if any parts appear missing or damaged.**
  Personal injury or product damage could result. In these cases, contact LG Electronics Service Agent to avoid hazard.
- **Do not use an extension cord with this vacuum cleaner.**
  Fire hazard or product damage could result.
- **Using proper voltage.**
  Using improper voltage may result in damage to the motor and possible injury to the user. Proper voltage is listed on the bottom of vacuum cleaner.
- **Turn off all controls before unplugging.**
  Failure to do so could result in electrical shock or personal injury.
- **Do not change the plug in any way.**
  Failure to do so could result in electrical shock or personal injury or product damage. Doing so result in death. If plug does not fit, contact a qualified electrician to install the proper outlet.
- **Repairs to electrical appliances may only be performed by qualified service engineers.**
  Improper repairs may lead to serious hazards for the user.

IMPORTANT SAFETY INSTRUCTIONS

⚠ CAUTION

- **Do not put any objects into openings.**
  Failure to do so could result in product damage.
- **Do not use with any opening blocked: keep free of dust, lint, hair, and anything that may reduce air flow.**
  Failure to do so could result in product damage.
- **Do not use vacuum cleaner without dust tank and/or filters in place.**
  Failure to do so could result in product damage.
- **Always clean the dust bin after vacuuming carpet cleaners or fresheners, powders and fine dust.**
  These products clog the filters,reduce airflow and can cause damage to the cleaner. Failure to clean the dust bin could cause permanent damage to the cleaner.
- **Do not use vacuum cleaner to pick up sharp hard objects, small toys, pins, paper clips, etc.**
  They may damage the cleaner or dust bin.
- **Store the vacuum cleaner indoors.**
  Put the vacuum cleaner away after use to prevent tripping over it.
- **The vacuum cleaner is not intended to use by young children or infirm people without supervision.**
  Failure to do so could result in personal injury or product damage.
- **Only use parts produced or recommended by LG Electronics Service Agents.**
  Failure to do so could result in product damage.
- **Use only as described in this manual. Use only with LG recommended or approved attachments and accessories.**
  Failure to do so could result in personal injury or product damage.
- **To avoid personal injury and to prevent the machine from falling when cleaning stairs, always place it at the bottom of stairs.**
  Failure to do so could result in personal injury or product damage.
- **Use accessory nozzles in "MIN" mode.**
  Failure to do so could result in product damage.
- **Don't grasp the tank handle when you are moving the vacuum cleaner.**
  The vacuum cleaner's body may fall when separating tank and body. Personal injury or product damage could result. **You should grasp the carrier handle** when you are moving the vacuum cleaner.
- **If after emptying the dust tank the indicator light is on(red), clean the dust tank.**
  Failure to do so could result in product damage.
- **Make sure the filters (exhaust filter and motor safety filter) are completely dry before replacing in the machine.**
  Failure to do so could result in product damage.
- **Do not dry the filter in an oven or microwave.**
  Failure to do so could result in fire hazard.
- **Do not dry the filter in a clothes dryer.**
  Failure to do so could result in fire hazard.
- **Do not dry near an open flame.**
  Failure to do so could result in fire hazard.
- **If the power cord is damaged, it must be replaced by an approved LG Electronics Service Agent to avoid a hazard.**
- **This appliance is not intended for use by persons (including children) with reduced physical, sensory or mental capabilities, or lack of experience and knowledge, unless they have been given supervision or instruction concerning use of the appliance by a person responsible for their safety.**
  Children should be supervised to ensure that they do not play with the appliance.

Thermal protector :

This vacuum cleaner has a special thermostat that protects the vacuum cleaner in case of motor overheating. If the vacuum cleaner suddenly shuts off, turn off the switch and unplug the vacuum cleaner. Check the vacuum cleaner for possible source of overheating such as a full dust tank, a blocked hose or clogged filter. If these conditions are found, fix them and wait at least 30 minutes before attempting to use the vacuum cleaner. After the 30 minute period, plug the vacuum cleaner back in and turn on the switch. If the vacuum cleaner still does not run, contact a qualified electrician.

How to use **Assembling vacuum cleaner**

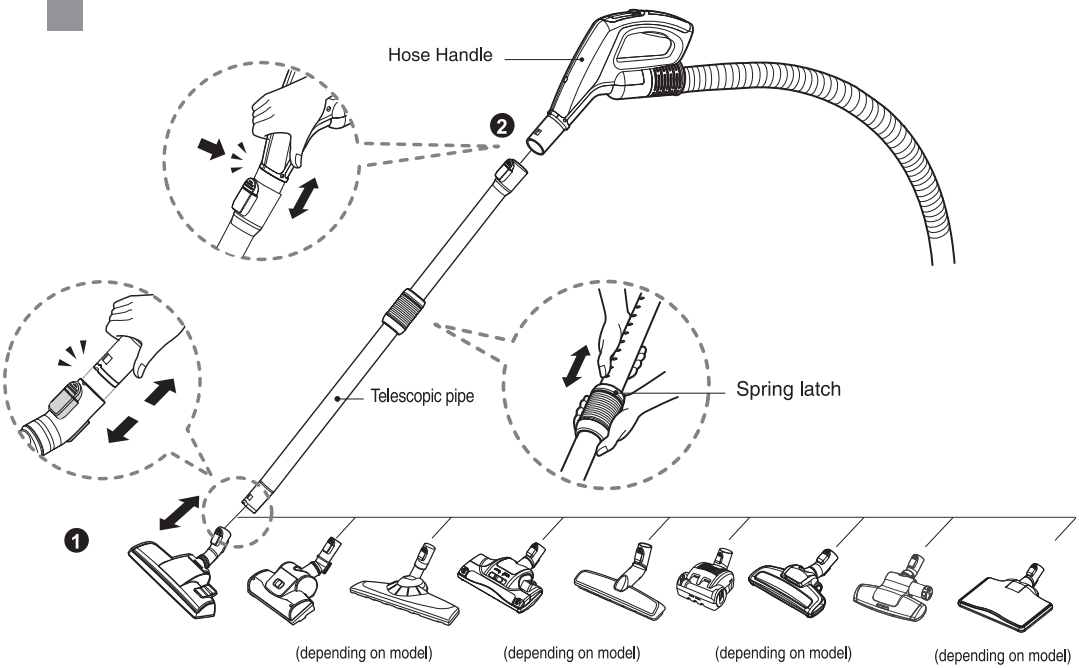

❶ Carpet and Floor nozzle (depending on model)

Push the nozzle into the telescopic pipe.

❷ Telescopic pipe (depending on model)

- Push telescopic pipe firmly into hose handle.
- Grasp the spring latch to expand.
- Pull out the pipe to desired length.

⚠ WARNING!
No suction liquids.
Suction liquids can cause defects.

How to use **Assembling vacuum cleaner**

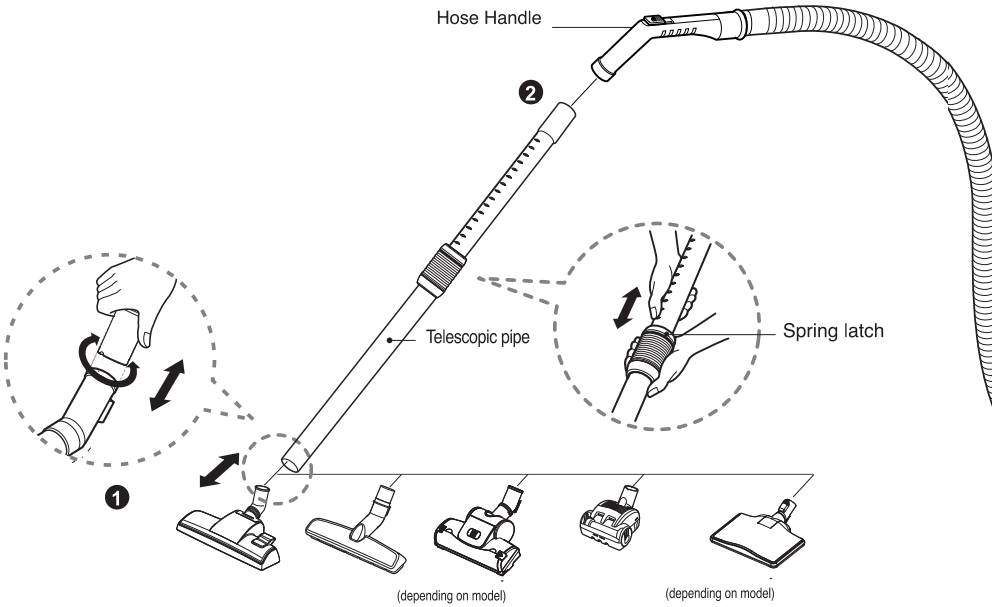

❶ Carpet and Floor nozzle (depending on model)

Push the nozzle into the telescopic pipe.

❷ Telescopic pipe (depending on model)

- Push telescopic pipe firmly into hose handle.
- Grasp the spring latch to expand.
- Pull out the pipe to desired length.

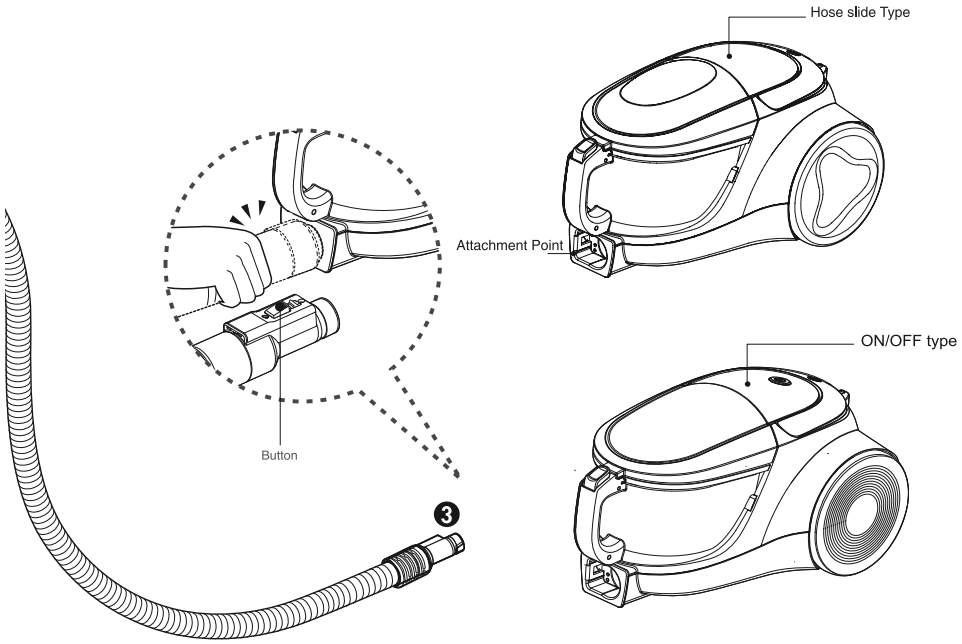

❸ Connecting the hose to the vacuum cleaner

Push the fitting pipe on the flexible hose into the attachment point on the vacuum cleaner
To remove the flexible hose from the vacuum cleaner, press the button situated on the fitting pipe, then pull the fitting pipe out of the vacuum cleaner.

How to use Operating vacuum cleaner

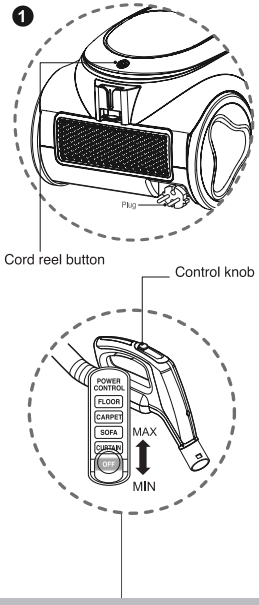

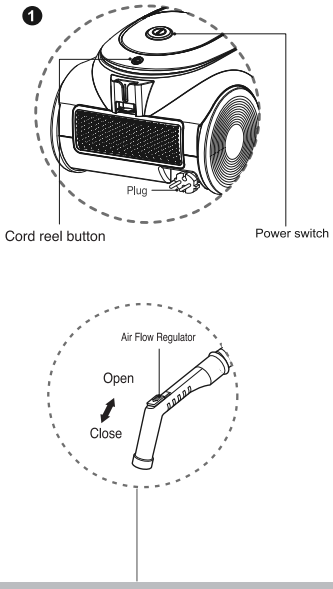

❶ How to operate (Hose slide type)

- Pull out the power cord to the desired length and plug into the socket.
- Place the control knob of the hose handle to the required position.
- To turn off, slide control knob to OFF position.
- Press the cord reel button to rewind the power cord after use.

❶ How to operate (ON/OFF type)

- Pull out the power cord to the desired length and plug into the socket.
- Press power switch to start the vacuum cleaner.
- The flexible hose handle has a manual air flow regulator which allows you to briefly reduce the suction level.
- Press the cord reel button to rewind the power cord after use.

❷

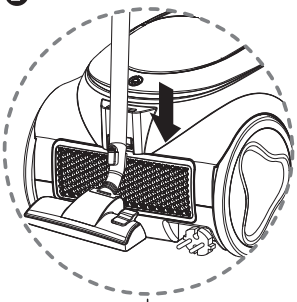

❸

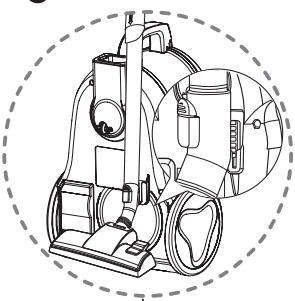

❷ Park mode

- To store during vacuuming, for example to move a small piece of furniture or a rug, use park mode to support the flexible hose and nozzle.
- Slide the hook on the nozzle into the slot on the rear side of vacuum cleaner.

❸ Storage

- When you have switched off and unplugged the vacuum cleaner,
  press the cord reel button to automatically rewind the cord.
- You can store your vacuum cleaner in a vertical position by sliding the hook on the nozzle into the slot on the underside of the vacuum cleaner.

How to use

Using carpet and floor nozzle / Hard Floor Nozzle

❶

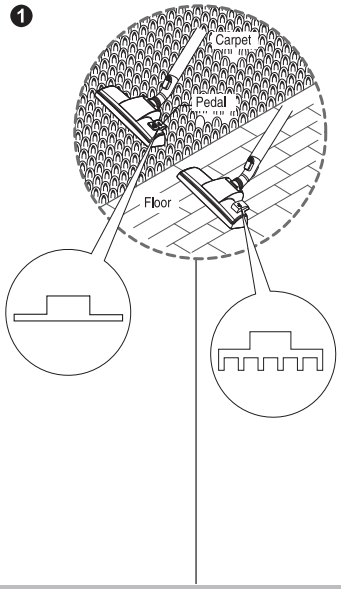

❷

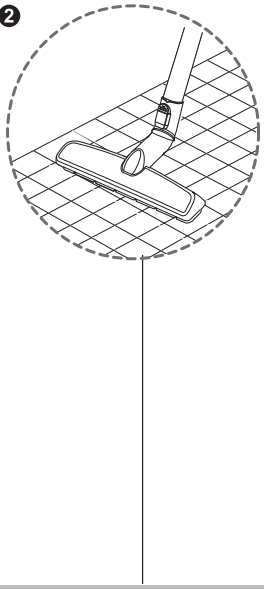

❶ **Carpet and floor nozzle (depending on model)**

- **The 2 position nozzle**
  This is equipped with a pedal which allows you to alter it's position according to the type of floor to be cleaned.
- **Carpet or rug position**
  Press the pedal to lift the brush up.
- **Hard floor position** (tiles, parquets floor)
  Press the pedal to lower brush.

❷ **Hard Floor Nozzle (depending on model)**

- Efficient cleaning of hard floors (wood, linoleum, etc)

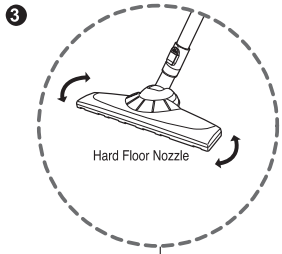

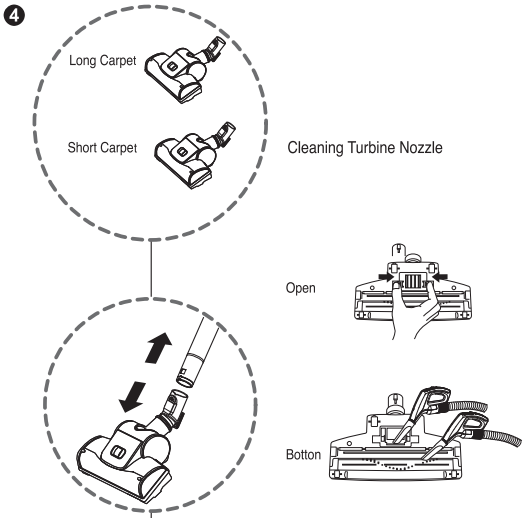

❸ Hard Floor Nozzle (depending on model)

- You can perform cleaning at any place like corner or crevice since revolution is free.

❹ Turbine Nozzle (depending on model)

- Cleaning turbine brush nozzle.
- Press the button on the rear side of the nozzle to separate the air cover.
- Use the crevice tool to vacuum clean the brush and fan.

How to use

Using All Floor nozzle and mini turbine nozzle

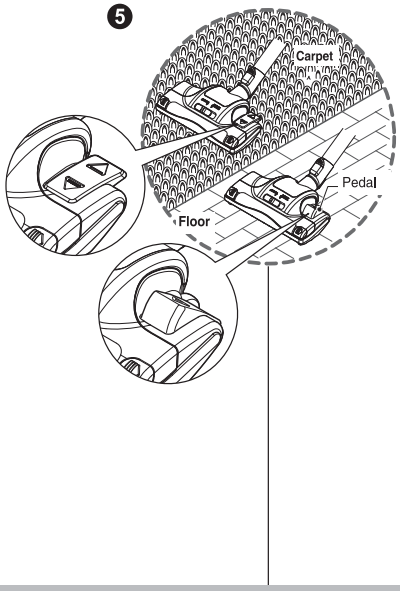

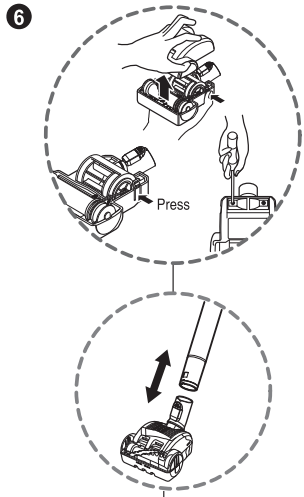

❺ All Floor nozzle (depending on model)

- **The 2 position nozzle**
  This is equipped with a pedal which allows you to alter its position according to the type of floor to be cleaned.
- **Carpet or rug position** Press the pedal (⛰), then brush will rotate
- **Hard floor position** Press the pedal (△), then brush will stop rotating.

❻ Mini turbine nozzle (optional)

- Mini turbine is used for stairs and other hard to reach places.
- To clean the mini turbine nozzle, remove the nozzle cover : Remove 2 screws on the bottom and take mini turbine nozzle cover off as shown.
- Frequently clean and remove hair, string, and lint build-up in the brush area. Failure to do so could damage to mini turbine nozzle.

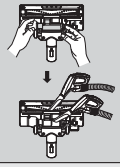

Cleaning All Floor nozzle

- Open the cover by pulling the hook.
- Clean the hole and brush of the nozzle.

How to use Cleaning all floor nozzle

⚠ CAUTION

Personal injury hazard. Always unplug the vacuum cleaner before cleaning. Failure to do so could result in personal injury.

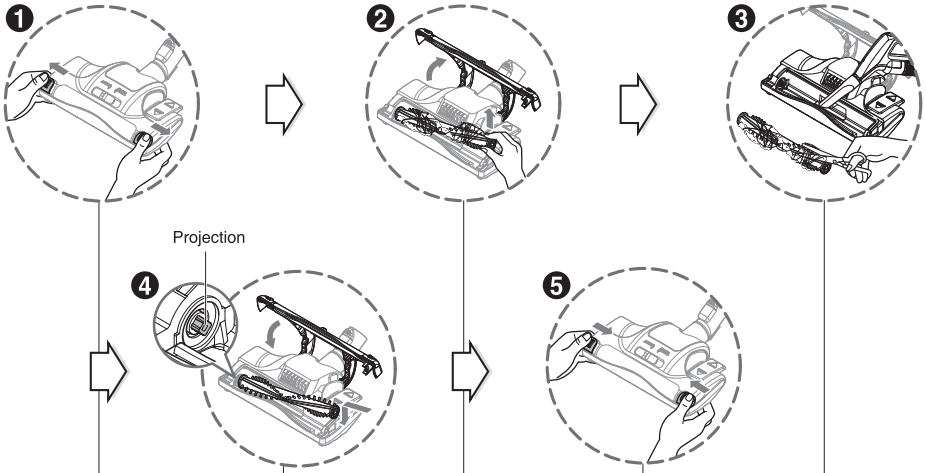

❶ Push the lever outside.

❷ Open the cover and put up the brush.

⚠ Do not touch the brush because the brush is so hot after turning off the vacuum cleaner.

❸ Clean the brush and nozzle.

❹ Push the brush into the projection, put down the brush and close the cover.

❺ Push the lever inside.

⚠ CAUTION

• Do not block up the hole by hand or another object (paper, fabric, stockings, etc) when open the cover.

• Do not touch the brush when nozzle is overturned.

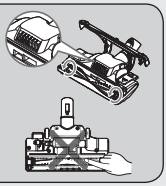

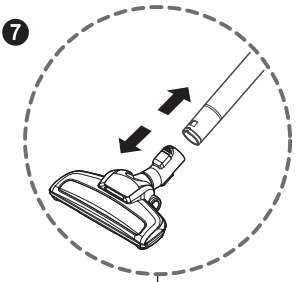

❼ Turbine Nozzle (depending on model)

- Frequently clean and remove hair, string, and lint build-up in the brush area. Failure to do so could damage to mini turbine nozzle.

How to use Cleaning Turbine Nozzle

⚠ CAUTION

Personal injury hazard. Always unplug the vacuum cleaner before cleaning. Failure to do so could result in personal injury.

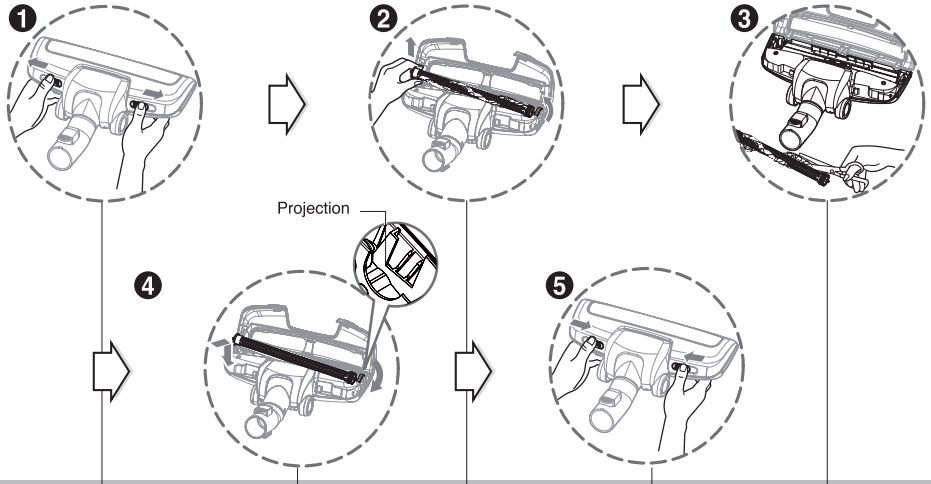

❶ Push the lever outside.

❷ Open the cover and put up the brush.

⚠ Do not touch the brush because the brush is so hot after turning off the vacuum cleaner.

❸ Clean the brush and nozzle.

❹ Push the brush into the projection, put down the brush and close the cover.

❺ Push the lever inside.

⚠ CAUTION

• Do not block up the hole by hand or another object (paper, fabric, stockings, etc) when open the cover.

• Do not touch the brush when nozzle is overturned.

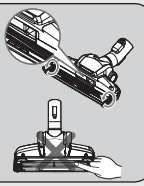

How to Use

Using sani punch nozzle

Features
This nozzle picks up even dust inside through beating.
The bottom part can be separated to be cleaned.
Since the bottom does not stick to the surface, vacuuming is easy.

How to use
Follow the directions below for properuse.

Assembly
Connect the nozzle to the telescopic pipe.

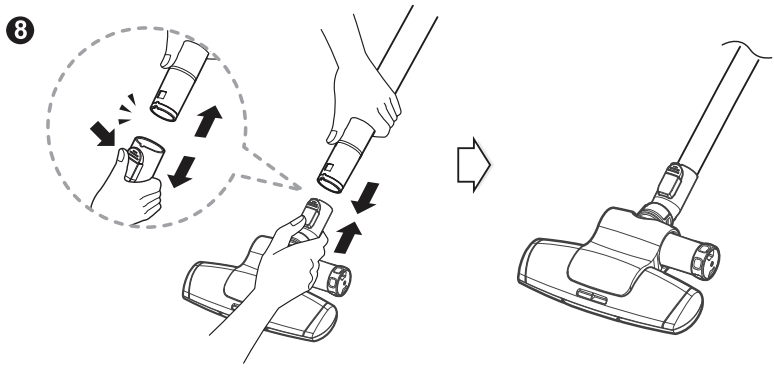

❽ Sani punch nozzle (depend on model)

Set the suction power control switch to MAX POWER before vacuuming.
Depending on the type of bedding, handling may be awkward or it may cause a lot of noise.
In this case, adjust the suction power control switch to a lower setting.

This Sani Punch nozzle is for effective cleaning of beds and blankets to remove mites and dust.

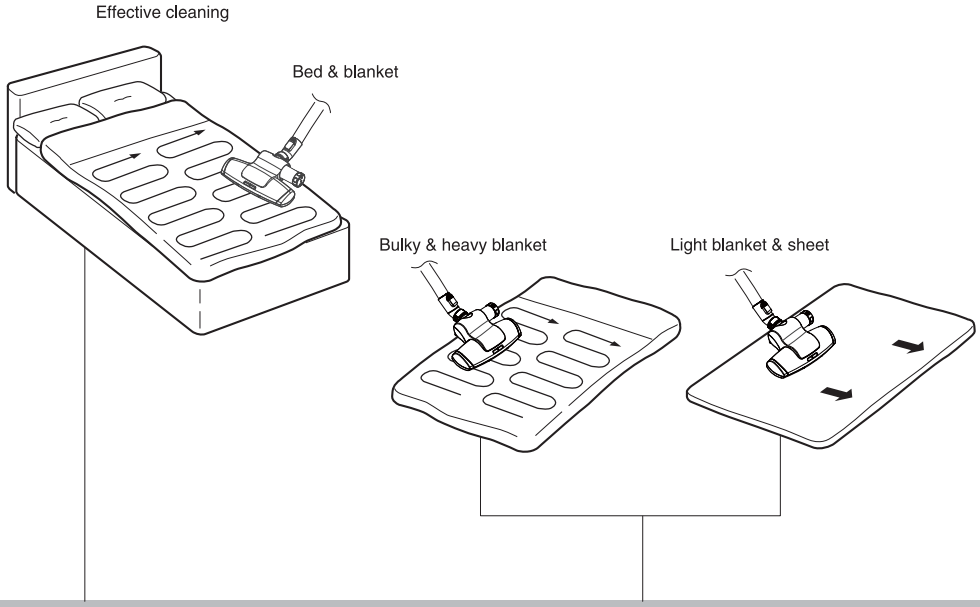

When using on the bed

Lay out the blanket and vacuum it on the bed.

When using on the floor

It is easier to clean a light blanket or sheetby pushing the nozzle in the direction of the arrow. To increase cleaning efficiency for light blankets, lay on top of a bulky blanket and then clean.

For simple cleaning of the vacuum nozzle, detach the Sani Punch nozzle from the telescopic pipe and attach the crevice tool to vacuum dust.

Top

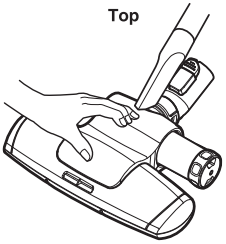

Bottom

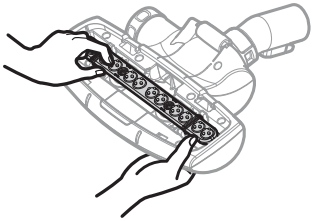

Since the vibrator inside is composed of precision parts, never disassemble the body.
Be careful not to let foreign objects clog the air suction part on top of the vacuum nozzle.
Since removal of the punch bar may cause performance problems, do not warp or remove it.
Attach the bottom plate properly before using. Without this bottom plate, it may not function.

Since this vacuum nozzle has been made exclusively for cleaning beds, blankets and upholstery, use it only for these cleaning purposes.
(Using it to clean the floor may result soiling it or a drop in performance, do not use it for such purposes.)

Follow the instruction below for through washing.
(Do not soak the entire body of the vacuum nozzle in water, it may cause the vibrator to malfunction)

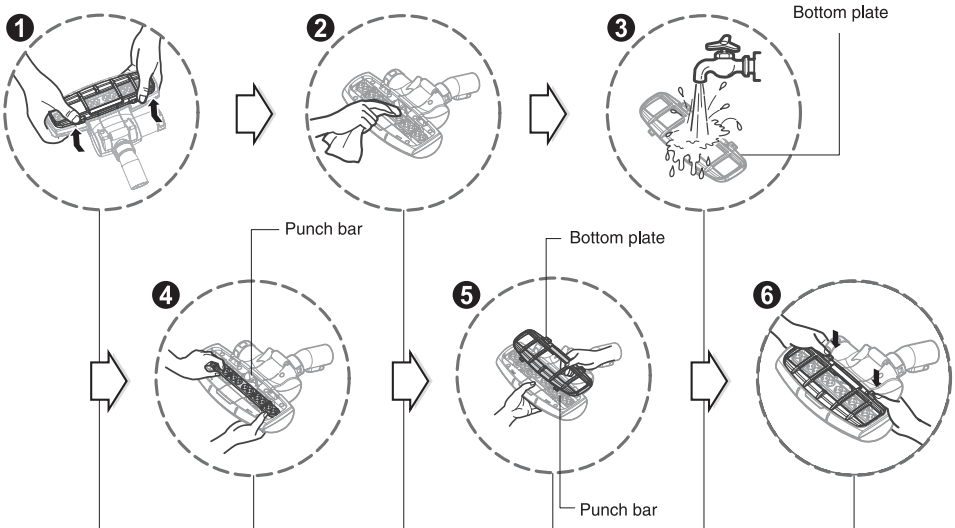

❶ Press the button on the rear side of the vacuum nozzle to separate the bottom plate.

❷ Wipe all the soiled parts of the vacuum nozzle body with a cloth.

❸ Wash the removed bottom plate with water and dry it.

❹ Straighten the punch bar on the lower section.

❺ Insert the attachment projections on bottom plate to the vacuum nozzle grooves.

❻ Push down the tabs to secure.

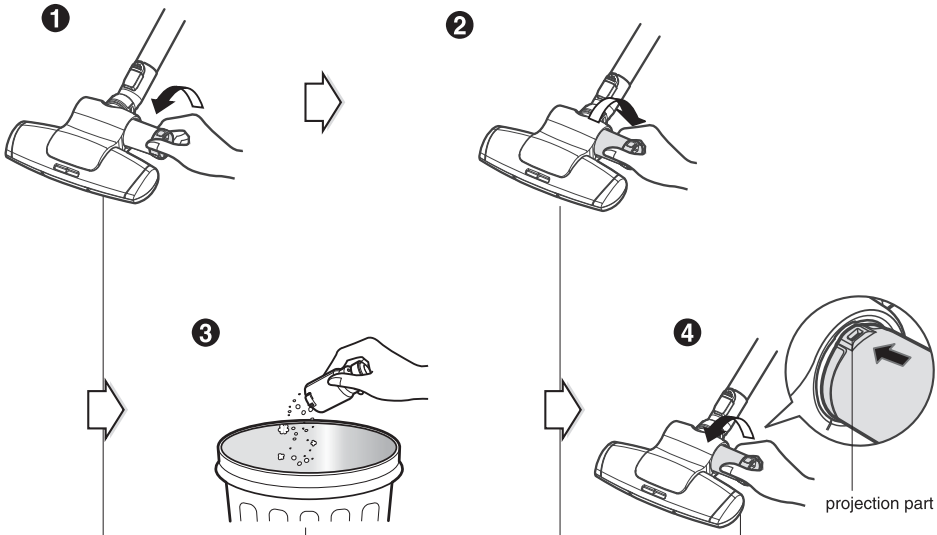

❶ Push the button 2-3 times when the dust is filled in the dustbin while cleaning

❷ When the dust is fully filled after cleaning, take the bin and turn it counterclockwise to disconnect

❸ Waste the dust in the bin

❹ Take the bin to fix into the projection part and then turn it clockwise to connect.

How to use

User's guide for Mop Nozzle

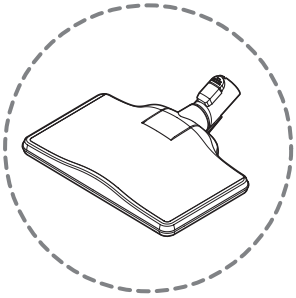

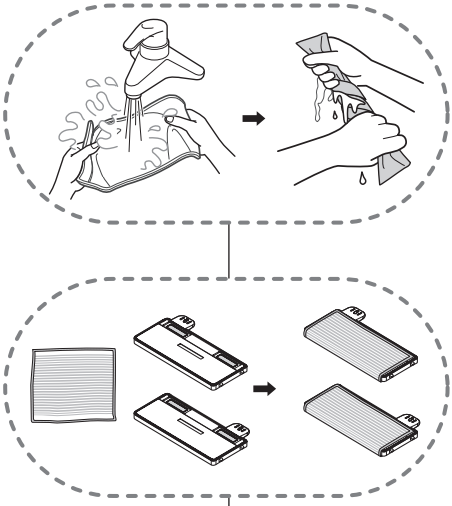

How to use, replace and clean the microfiber cloth

- The integrated microfiber mop removes fine grit and dust quickly after vacuuming.

- When the microfiber cloth is attached on the cloth board, make sure soak the microfiber cloth under water and twist completely.
- Microfiber cloth board can be used both sides.
- Reuse the dirty cloth by cleaning it with clean water, soap, detergent etc. and then by completely drying the cloth in the shade.

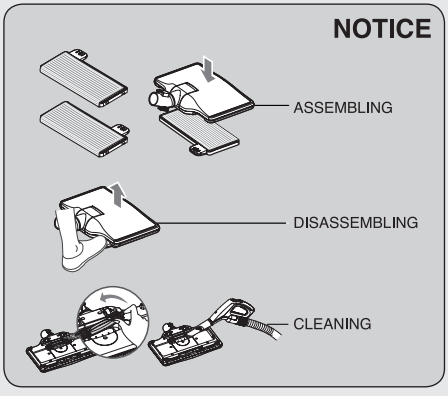

⚠ CAUTION

- If you do not completely remove the moisture when using the microfiber cloth, it can cause electric shock and damage the main unit.

How to use Using accessory nozzles

Crevice tool

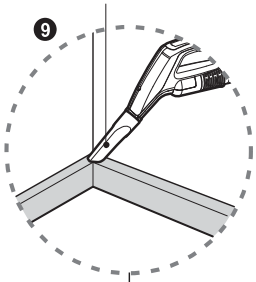

Upholstery nozzle

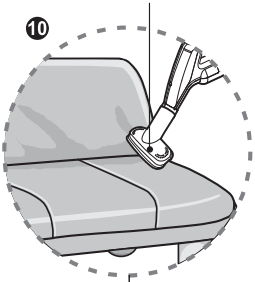

Dusting brush

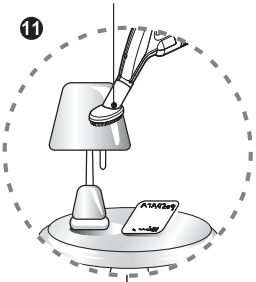

❾ Crevice Tool(depending on model)

Crevice tool is for vacuuming in those normally hard-to-reach places such as reaching cobwebs or between the cushions of a sofa.

❿ Upholstery Nozzle(depending on model)

Upholstery nozzle is for vacuuming upholstery, mattresses etc.

⓫ Dusting Brush (depending on model)

Dusting brush is for vacuuming picture frames, furniture frames, books and other irregular surfaces.

NOTICE

Use accessory in the sofa mode.



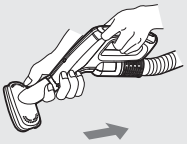

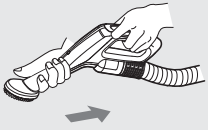

How to use Using accessory nozzles

Crevice tool

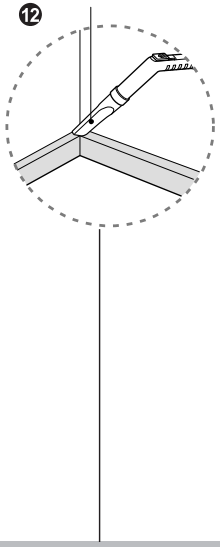

Upholstery nozzle

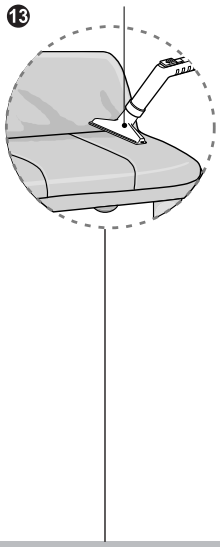

Dusting brush

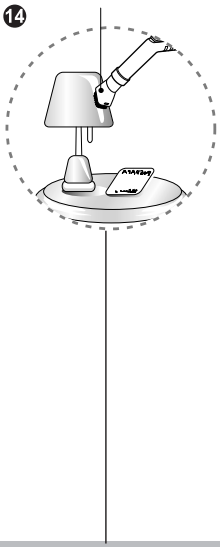

⑫ Crevice Tool(depending on model)

Crevice tool is for vacuuming in those normally hard-to-reach places such as reaching cobwebs or between the cushions of a sofa.

⑬ Upholstery Nozzle(depending on model)

Upholstery nozzle is for vacuuming upholstery, mattresses etc.

⑭ Dusting Brush (depending on model)

Dusting brush is for vacuuming picture frames, furniture frames, books and other irregular surfaces.

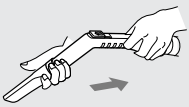

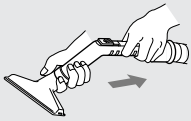

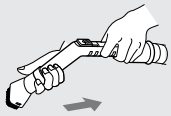

How to use Emptying dust tank

- When the dust in dust tank reaches the maximum line.

• Grasp the handle of the tank and then press the tank separation button.

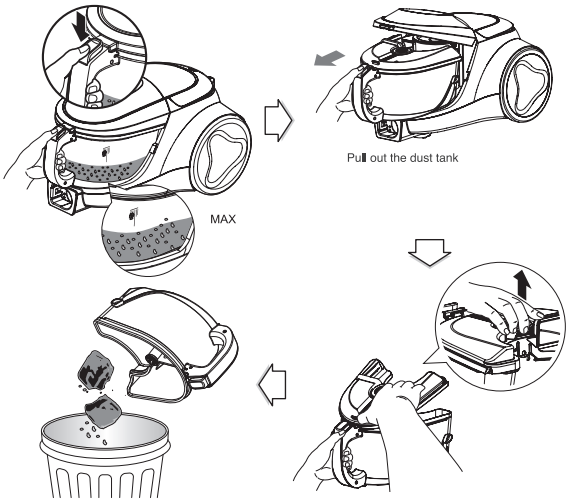

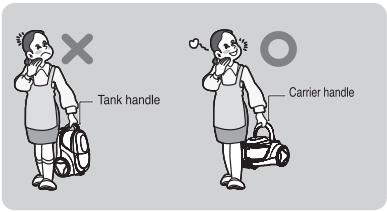

Moving the vacuum cleaner

• Don't grasp the tank handle when you are moving the vacuum cleaner. The vacuum cleaner's body may fall when separating tank and body. You should grasp the carrier handle when you are moving the vacuum cleaner.

Cleaning the dust tank.

• Open the tank cap.

• Wash both parts with soft material.

Gently rinse both parts under a cold running tap.

NOTICE

If filters are damaged, do not use them.
In this cases, contact LG Electronics Service Agent.

How to use Cleaning dust tank

• Grasp the handle of the tank and then press the tank separation button.

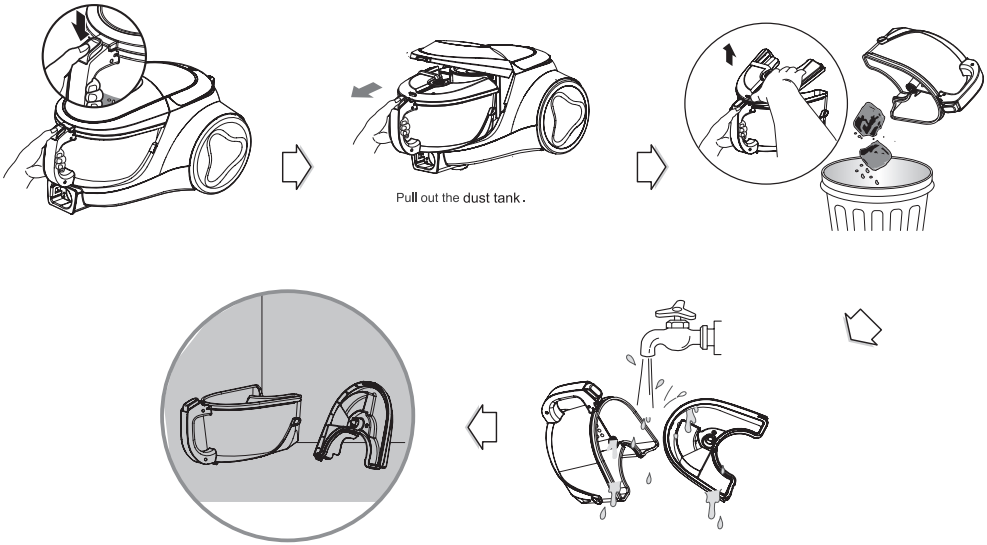

Push button and pull out dust tank.
Raise dust tank cap.
Dry fully in shade so that moisture is entirely removed.

NOTICE

If suction power decreases after cleaning dust tank, clean air filter and motor safety filter. ➡ Next page

How to use Cleaning filters and air guide tank

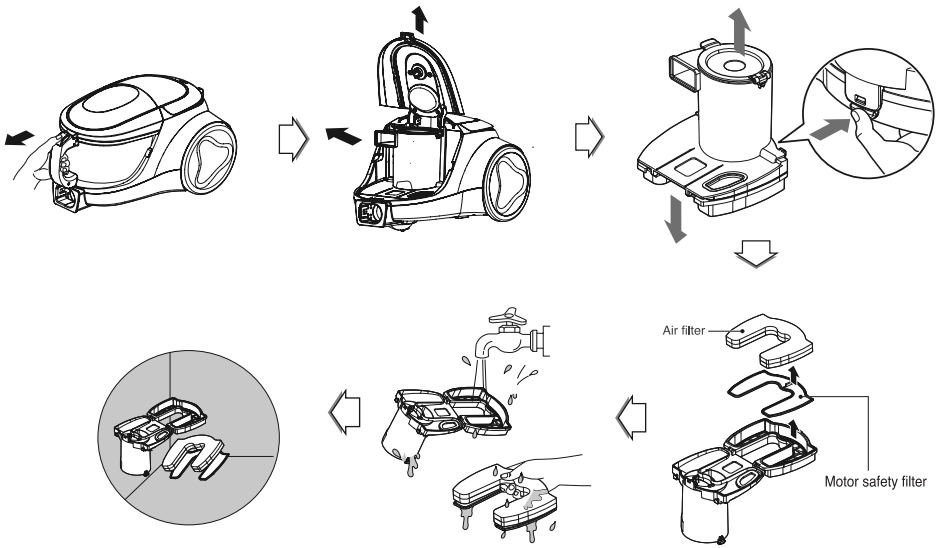

If suction power is decreased after cleaning dust tank, clean air filter and motor safety filter.
Air filter and motor safety filter are located at the bottom of the dust tank as above.

- Open the air filter cover by pulling the air filter cover lever and take out air filter and a motor safety filter.
- Separate the parts
- Wash air filter and motor safety filter with water.
- Do not wash filters with hot water.
- Dry fully in shade so that moisture is entirely removed.
- Air filter and motor safety filter should be cleaned as above.

⚠ WARNING!

Gently rinse both parts separately under a cold running tap until the water runs clear.
Do not use detergent or a washing machine or dishwasher.
Wash filters at least once a month.
Dry fully over than 24 hrs in shade.

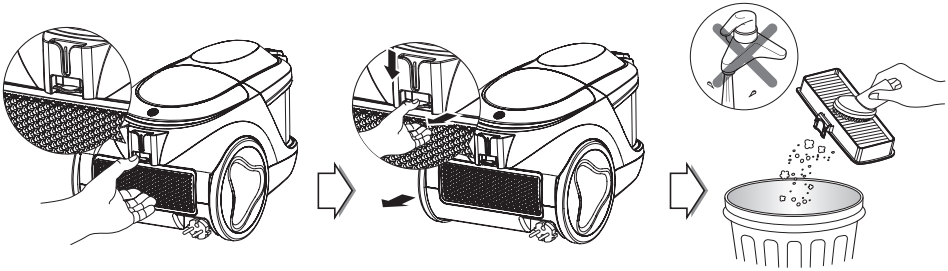

- The exhaust filter is a reusable HEPA filter.
- To change the exhaust filter, remove the filter cover on the body by release hook.
- Pull out the exhaust filter.
- Dust off filter.
- The exhaust filter should be cleaned at least once a year.

How to use Assembling Tank Cover & Tank assembly

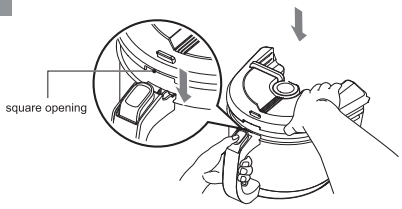

① Set the square opening of cover onto the groove of handle.

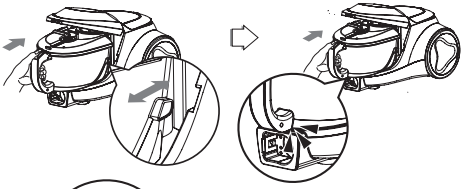

② Slide the tank on product to match the tank ribs to grooves of body till the bottom locker clicks.

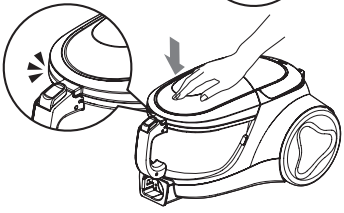

③ Push the front end of top cover

If suction power is decreased after re-assemble, check dust tank assembled correctly.
- Check the guide rib whether it is right in tank groove.
- If guide rib is not put in tank hole, re-assemble dust tank in parallel.

What to do if your vacuum cleaner does not work

Check that the vacuum cleaner is plugged in correctly and that the electrical socket is working.

What to do when suction power decreases

- Turn off the vacuum cleaner and unplug it.
- Check the telescopic pipe, flexible hose and cleaning tool for blockages or obstructions. Check that the dust tank is not full. Empty if necessary.
- Check that the exhaust filter is not clogged. Clean the exhaust filter if necessary.
- Check that the air filter and the motor safety filter are not clogged. Clean the them if necessary.
- Check the inside of the dust separator.Clean the inside of the dust separator if necessary.

WARRANTY

This LG Vacuum Cleaner comes with 12 months warranty, from the date of purchase against defective material or workman ship subject to following terms & conditions. In case of a defect, LG Electronics India Pvt. Ltd undertakes to get the set repaired free of charge.

INSTRUCTIONS FOR THE CUSTOMER

1. This warranty card has 2 parts. Kindly ensure that the dealer fills all parts correctly.
2. Part A is the customer's copy. It should be retained by you for record.
3. Part B must be torn and mailed to the nearest LG ELECTRONICS BRANCH OFFICES listed in this booklet. If not, please tell the dealer to keep Part B for collection.
4. In the event of a defect developing in the product, contact the authorized LG Electronics Service Centre, for obtaining warranty service and inform him of the defect ,Model No. & SI.No.

TERMS AND CONDITIONS

1. Repairs & Replacements will be carried out though authorized LG Electronics Service Centres.
2. For Units installed beyond the municipal limits of the jurisdiction of the authorizde LG Electronics Service Centres, all expenses incurred in collecting the units or parts there of, as well as expenses incurred with deputizing of service personnel/technicians towards conveyance and other incidentals etc. will be borne by the customer.
3. Components subject to wear, such as carbon brushes and Plastic part &/or accessories are not covered by this Warranty.
4. While the company will make every effort to carry out repairs at the earliest, it however is made expressly clear that the company is under no obligation to do so in a specified period of time.
5. The company or its authorized LG Electronics Service Centres reserves the right to retain any part(s) or components replaced at its discretion, in the event of a defect being noticed in the equipment during the warranty period.
6. Warranty does not cover accessories external to the equipment supplied by the dealer.

CUSTOMER COPY **PART A**

MODEL NO.:
UNIT Sr.No.:

DATE OF PURCHASE:

CUSTOMER NAME & ADDRESS	DEALER NAME & ADDRESS
TEL.	TEL.

Customer's Signature Dealer's Signature

This card is valid only if it is filled in and stamped by our authorized dealer on the date of purchase.

Warranty voids if:

1. The warranty card is not completed properly at the time of purchase. 2.The completed warranty card is not presented to authorized personnel at the time of service of the product. 3. The Vacuum Cleaner is not operated according to instructions given in the"Owner's Manual" booklet. 4.Defects are caused by improper or reckless use ,which shall determined by company personnel. 5. Any repair work is carried out by persons other than authorized company personnel. 6. Defects are caused due to causes beyond control like lightning, abnormal votage, acts of God or while in transit to service centre or purchaser's residence. 7. The warranty is not valid in case ,the Serial Number is deleted, defected or altered.ã

COMPANY COPY **PART B**

MODEL NO.:
UNIT Sr.No.:

DATE OF PURCHASE:

CUSTOMER NAME & ADDRESS	DEALER NAME & ADDRESS
TEL.	TEL.

Customer's Signature Dealer's Signature

This card is valid only if it is filled in and stamped by our authorized dealer on the date of purchase.

LG Electronics



Customer Care

For any query related to after sales service, you may please contact us on the numbers listed below.



LG Electronics India Pvt. Ltd.

Regd. Office : A Wing (3rd Floor) D-3, District Center
Saket, New Delhi-110017