Printing Specification

1. Specification

Models	1. Model Name:	G5*
	2. Suffix:	TR
	3. Part No:	MFL71833984
	4. REV	REV00
	5. Number of pages	16
	6. Folded/Unfolded	3 Folded
SIZE	7. Trim size (W x H)_Unfolded (mm)	296 x 420 (+/- 5)
	8. Trim size (W x H)_folded (mm)	148 x 105 (+/- 5)
	9. Bindery	-
COVER	10. Color (Cover)	-
	11. Paper (Cover)	-
	12. Weight (cover) (g/㎡)	-
INNER	13. Color (inner)	4 (CMYK)
	14. Paper (inner)	Wood free
	15. Weight (inner) (g/㎡)	70 (+/-10)
	16. Coating	No
	17. Thomson	No
	18. Sub-material	No
	19. Languages	ENG (1)

1.1 Folding / Cover

Folded Step

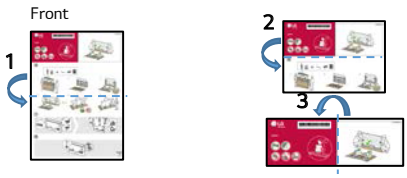

Folded

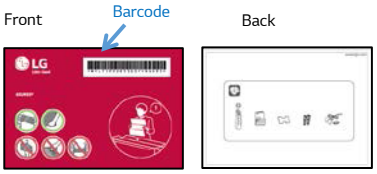

2. Origin Notification

Changes the Country name.

Printed in Korea ← Printed in[Country Name in English]

Copyright © 2021 LG Electronics Inc. All Rights Reserved.

Imprimé en Corée ← Imprimé en(au)[Country Name in French]

Copyright © 2021 LG Electronics inc. Tous droits réservés.

www.lg.com

[blank]

[PRODUZIDO NO POLO INDUSTRIAL DE MANAUS
CONHEÇA A AMAZÔNIA
LG Electronics da Brasil Ltda.
CNPJ: 01.166.372/0008-21
Rua Javari, nº 1004, Distrito Industrial, CEP 69075-110, Manaus/AM, Indústria Brasileira]

[Country Name] (ENG/FRE)	
LGERS / LGEMX :	Printed in Mexico Imprimé au Mexique
LGEKR :	Printed in Korea Imprimé en Corée
LGEMA :	Printed in Poland Imprimé en Pologne
LGEND :	Printed in China Imprimé en Chine
LGEIN :	Printed in Indonesia Imprimé en Indonésie
Brazil :	Printed in [Each Country name] [Image] (LGEAZ production only)
Others :	Each Country name.

NOTE

[Restriction of Hazardous Substances]

Hazardous substances on this product should be satisfied by substance regulation of Level A-I, A-II, SVHC according to LG(52)B—5011 standard.

Especially, Part should be followed and controlled the following specification.

(1) Hazardous substances test report should be submitted when part certification test and first mass production.

(2) Especially, Don't use or contain lead (Pb) and cadmium (Cd) in ink.

INK REQUIREMENT FOR EU

(1) The amount of MOAH/MOSH must be less than 0.1% of the weight of the INK used.

* MOAH(Mineral Oil Aromatic Hydrocarbons) : Consisting of 1 to 7 aromatic cycles

* MOSH(Mineral Oil Saturated Hydrocarbons) : Consisting of 16 to 35 carbon atoms

(2) From 01 January 2025 : Ban on the use of MOAH in INK up to a limit of one part per million(1ppm) for compounds of 3 to 7 aromatic cycles

3. History

Rev. Number	Date	Description	ECO Number	Owner	
REV07					
REV06					
REV05					
REV04					
REV03					
REV02					
REV01					
REV00	2025-01-22	-	-	Checked	Taeho.Bae
				Approved	Jongok.Kim

MFL71833984250 2REV00

OLED55G5*
OLED65G5* **OLED83G5***
OLED77G5* **OLED97G5***





www.lg.com



Images and Accessory parts shown in manual may vary depending on model.

Unpacking

Check your product box for the following items. If there are any missing accessories, contact the local dealer where you purchased your product.
The illustrations in this manual may differ from the actual product and item.

55/65/77”

1

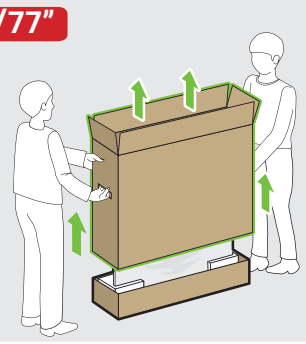

83/97”

1

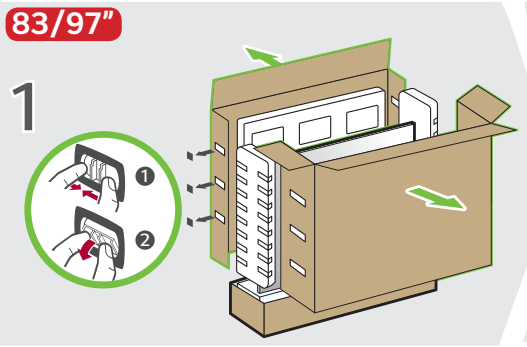

55/65/77/83/97”

2

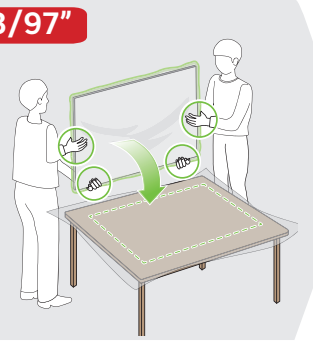

3



55/65”

1

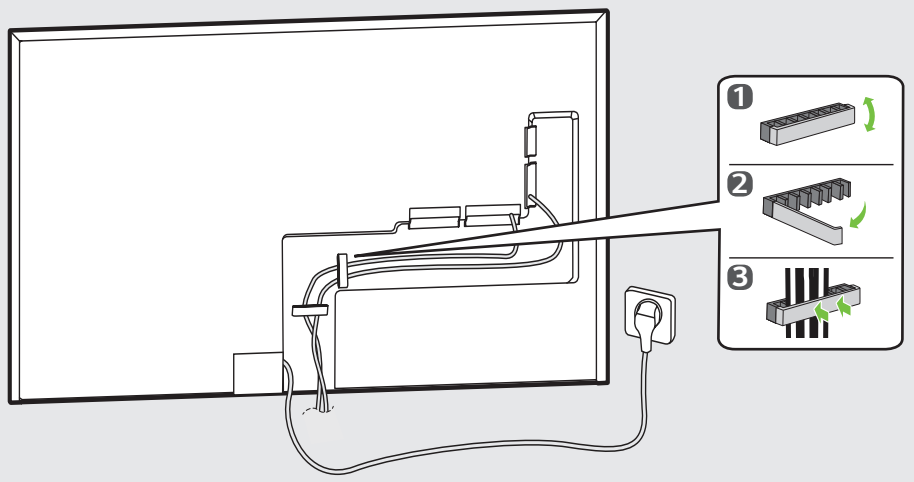

77/83/97”

1

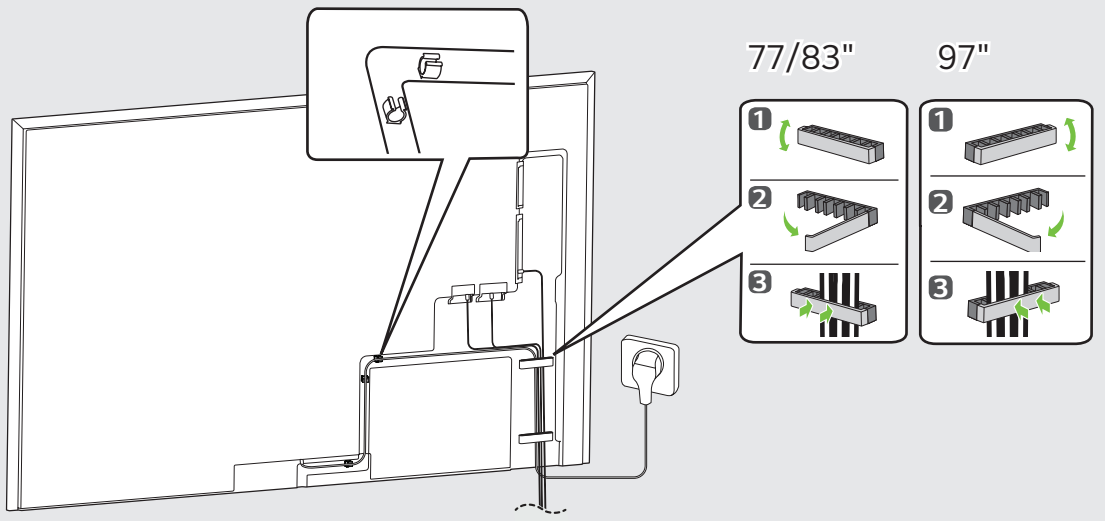

55/65/77/83/97”

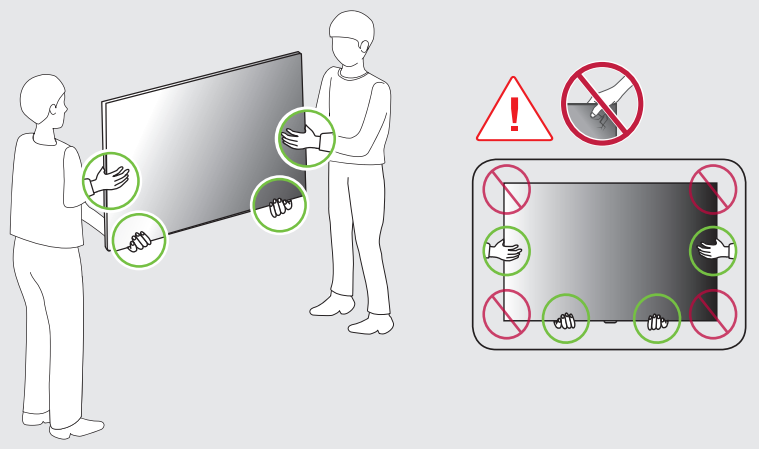

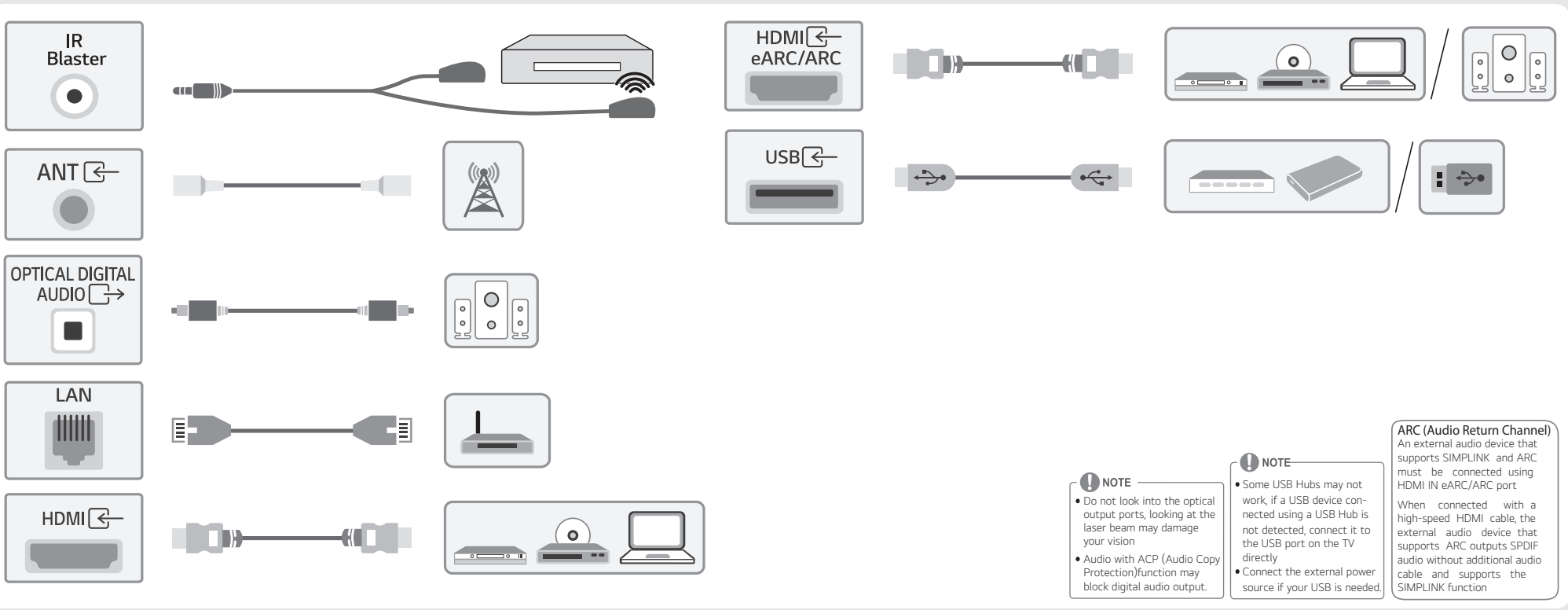

NOTE

- Do not look into the optical output ports, looking at the laser beam may damage your vision
- Audio with ACP (Audio Copy Protection)function may block digital audio output.

NOTE

- Some USB Hubs may not work, if a USB device connected using a USB Hub is not detected, connect it to the USB port on the TV directly
- Connect the external power source if your USB is needed.

ARC (Audio Return Channel)

An external audio device that supports SIMPLINK and ARC must be connected using HDMI IN eARC/ARC port

When connected with a high-speed HDMI cable, the external audio device that supports ARC outputs SPDIF audio without additional audio cable and supports the SIMPLINK function



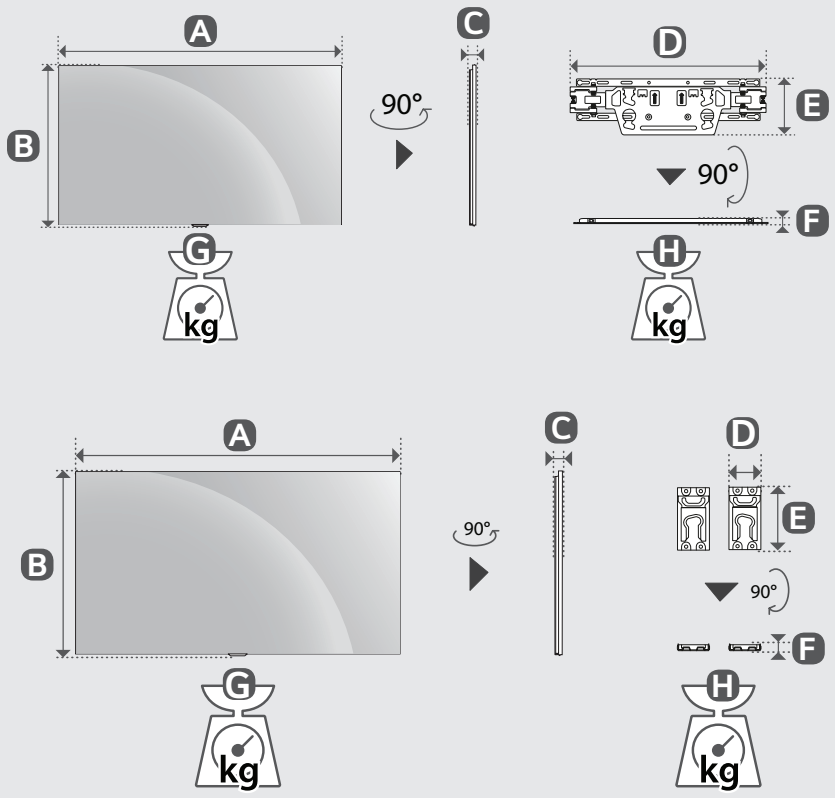

	A	B	C	D	E	F	G	H
	(mm)						(kg)	
OLED55G5*	1222	703	27.2	452	129	13	16.8	1.2
OLED65G5*	1441	826	24.3	452	129	13	22	1.2
OLED77G5*	1712	982	24.8	452	129	13	33.6	1.2
OLED83G5*	1847	1057	28	452	129	13	39.0	1.2

	A	B	C	D	E	F	G	H
	(mm)						(kg)	
OLED97G5*	2155	1230	28.2	134.8	254	16	57	2.8

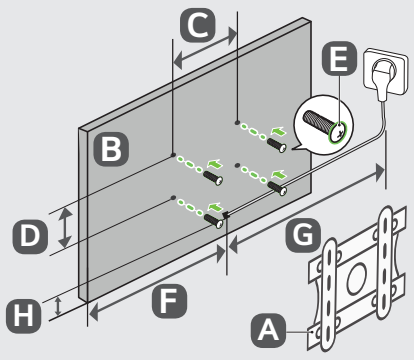

A	B	C x D (mm)	E	F (mm)	G (m)	H (mm)
Wallmout Bracket	**OLED55G5***	300 x 200	M6	544	≧1.5	56
	OLED65G5*	300 x 300		654		56
	OLED77G5*			856		57
	OLED83G5*	400 x 400		924		59
	OLED97G5*	600 x 400	M8	943		142

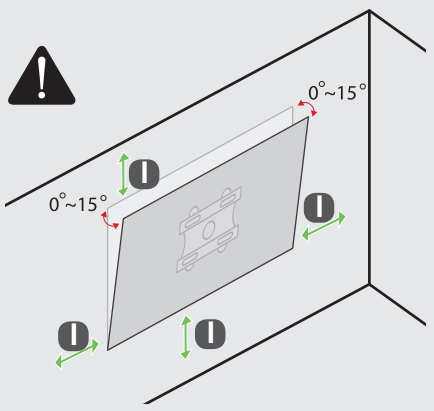

I (mm)	
OLED55G5*	100
OLED65G5*	
OLED77G5*	
OLED83G5*	
OLED97G5*	300

* : 0~9, A~Z