LG
Life's Good

MFL71886613220 1REV00

www.lg.com

UQ80*

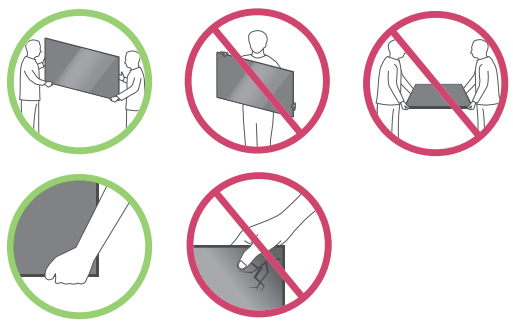

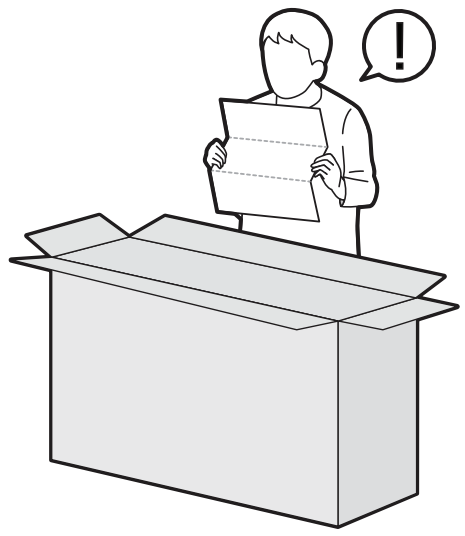

50/55UQ80*

1-A

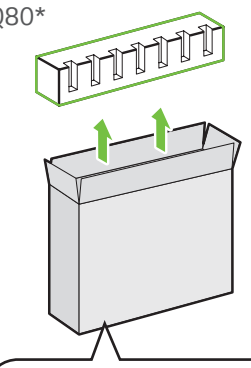

2-A

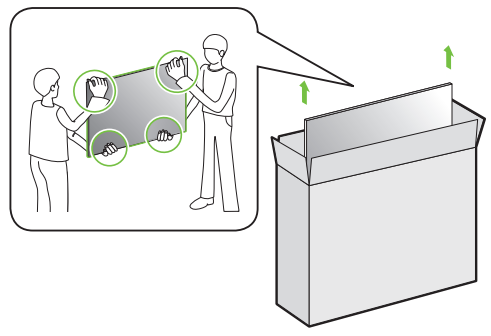

3

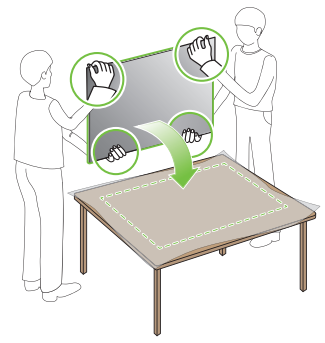

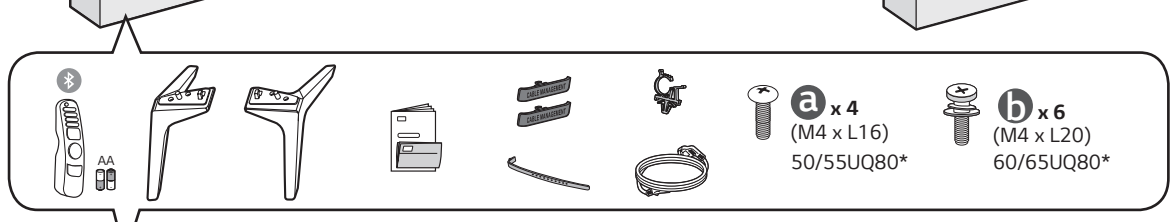

60/65UQ80*

1-B

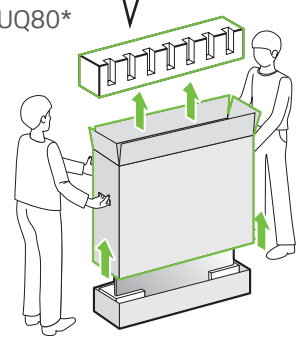

2-B

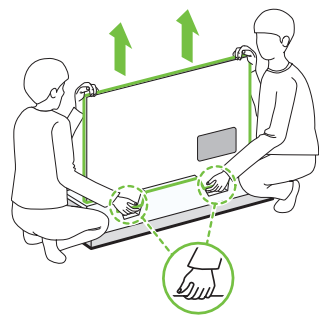

3

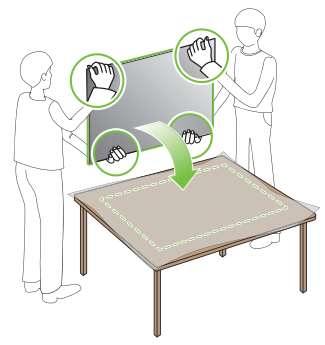

1

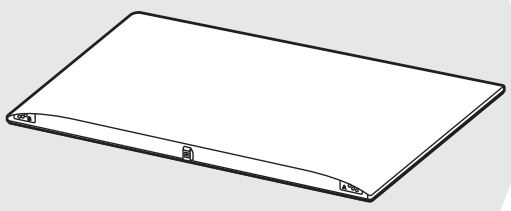

2

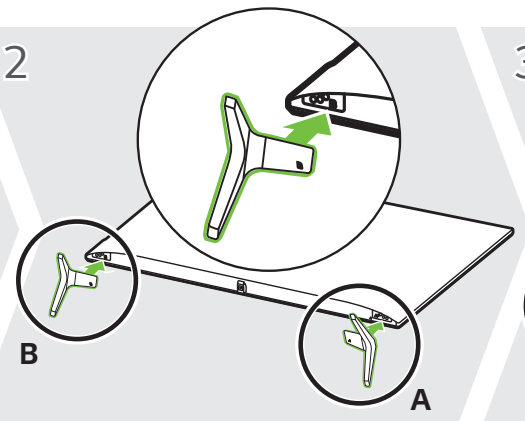

3

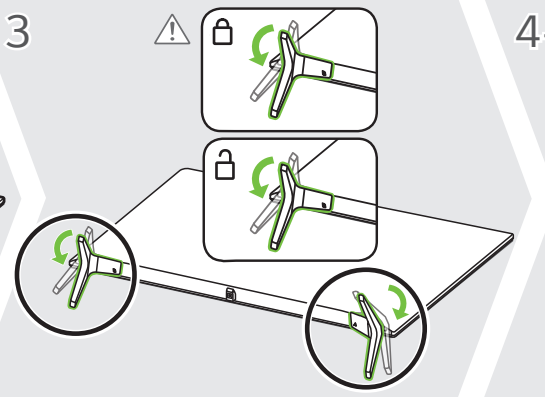

4-A 50/55UQ80*

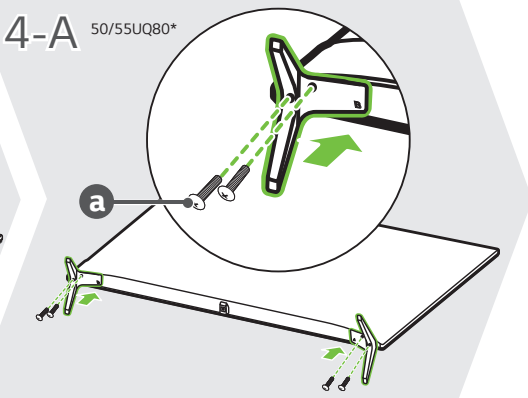

4-B 60/65UQ80*

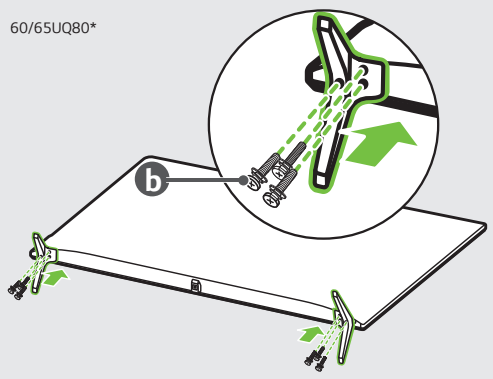

5

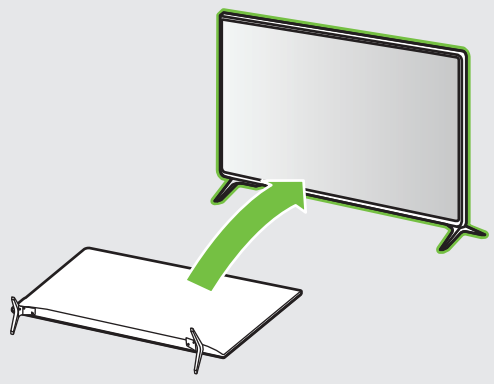

6

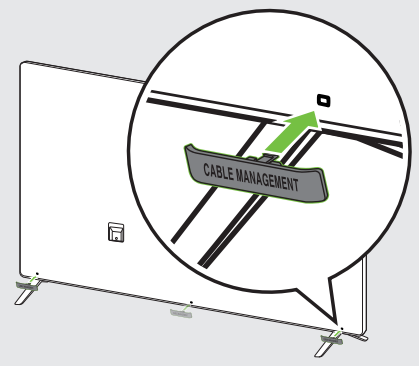

7

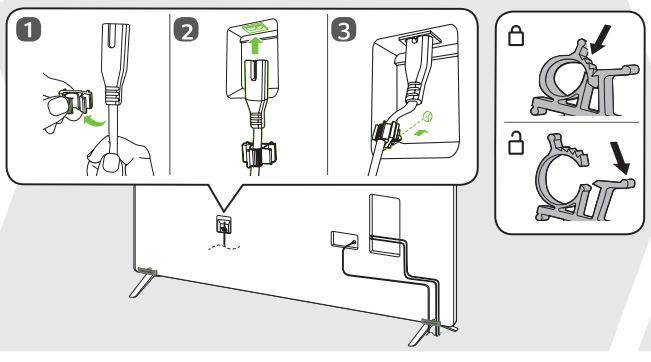

8

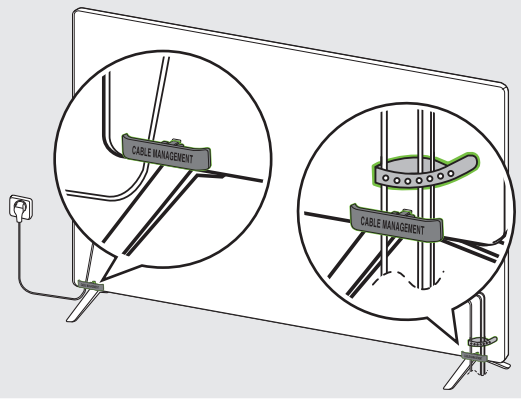

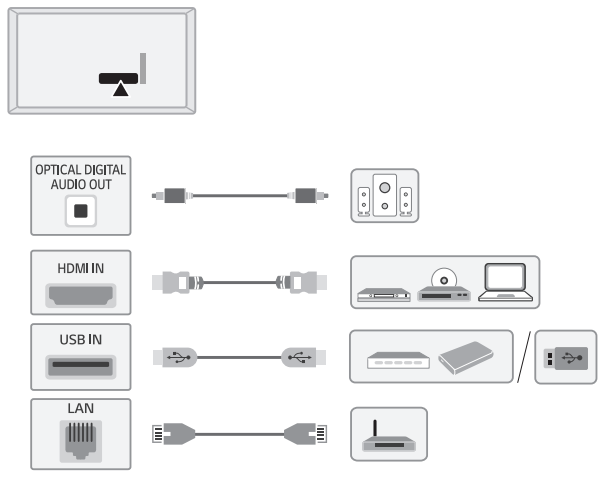

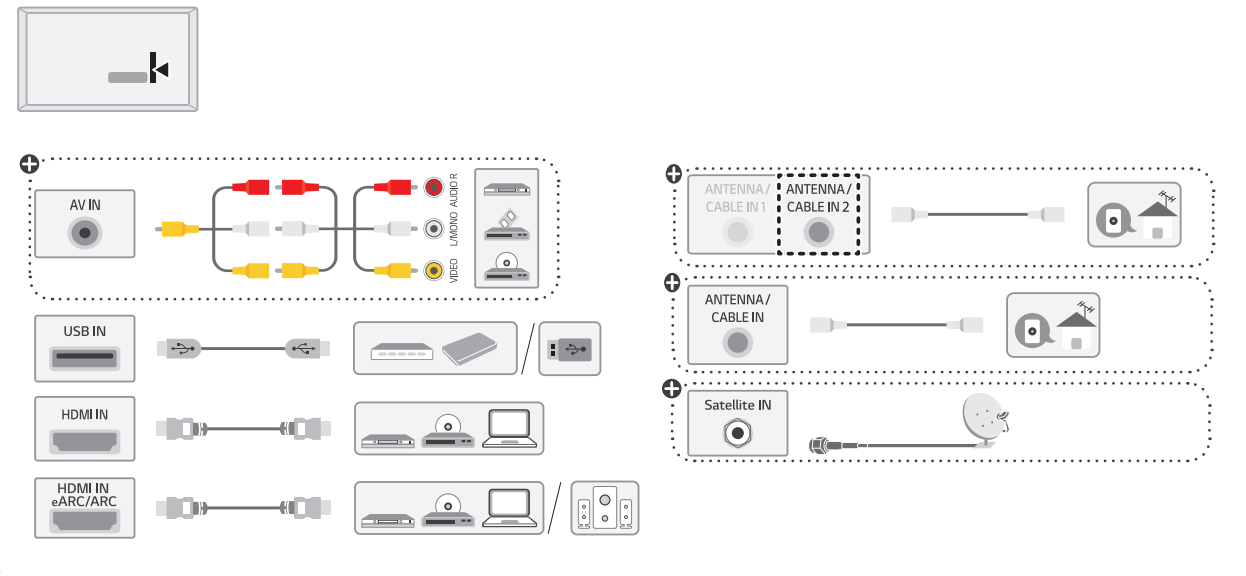





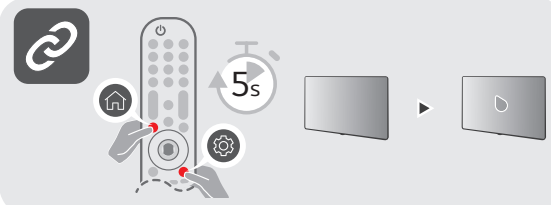



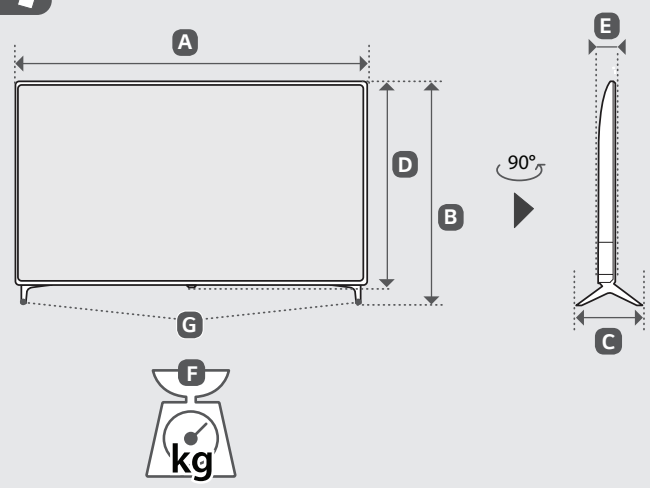

	A	B	C	D	E	F	F - G
	(mm)					(kg)	
50UQ80006LD 50UQ8000PSL 50UQ80006LM 50UQ8050PSB 50UQ8000PSC 50UQ8050PSK	1121	713	231	651	57.1	11.9	11.7
55UQ80006LD 55UQ8020PSK 55UQ80006LM 55UQ8040PSB 55UQ8000PSC 55UQ8040PSK 55UQ8000PSL 55UQ8050PSB 55UQ8020PSB 55UQ8050PSK	1235	776	231	715	57.5	14.2	14.0
60UQ8000PSC 60UQ8050PSB 60UQ8000PSL 60UQ8050PSK	1356	852	269	783	57.5	17.4	17.1
65UQ80006LD 65UQ8020PSK 65UQ80006LM 65UQ8040PSB 65UQ8000PSC 65UQ8040PSK 65UQ8000PSL 65UQ8050PSB 65UQ8020PSB 65UQ8050PSK	1454	906	269	838	57.7	21.8	21.5
Power requirement / Kebutuhan daya				AC 100-240 V ~ 50 / 60 Hz			

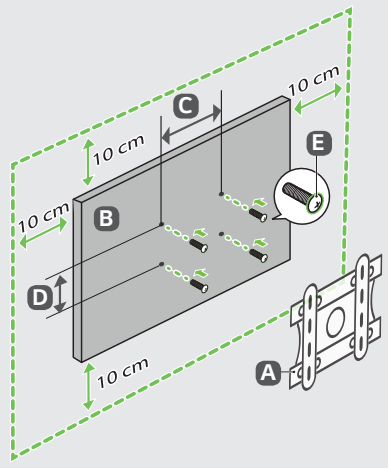

A	B	C x D (mm)	E
LSW240B MSW240	50UQ80*	200 x 200	M6
OLW480B MSW240	55UQ80*	300 x 300	M6
OLW480B	60/65UQ80*	300 x 300	M6

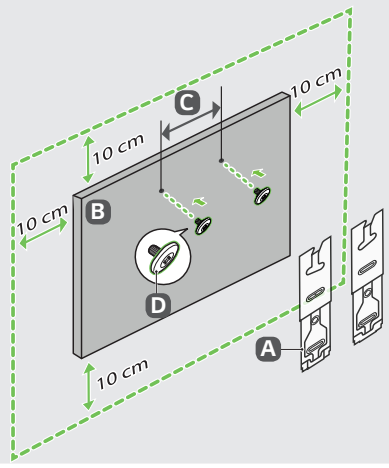

A	B	C (mm)	D
WB21LMB	50UQ80*	200	M6
	55/60/65UQ80*	300	

English • Read **Safety and Reference.**
Indonesia • Baca **Keamanan dan Petunjuk**

⊕ : Depending on model / Tergantung pada model

English • The Analog Gender adapter can be purchased separately at Customer Service.
Indonesia • Adaptor Analog Gender dapat dibeli terpisah di Layanan Pelanggan.