WALL MOUNT
SOPORTE DE PARED
FIXATION MURALE
НАСТЕННЫЙ КРОНШТЕЙН

www.lg.com

WM-L136A

MBM67558301
(2508-REV04)

Printed in Korea
Imprimé en Corée

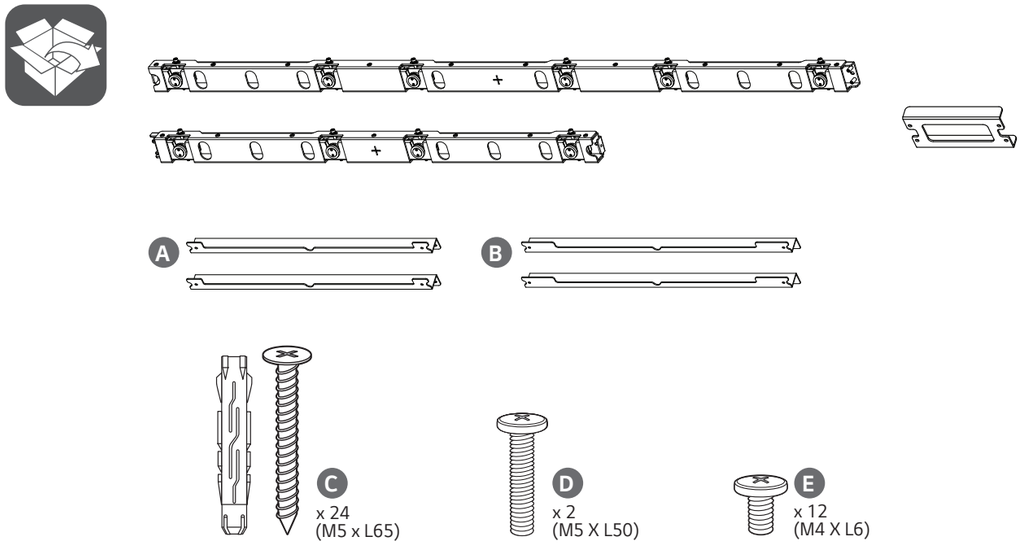

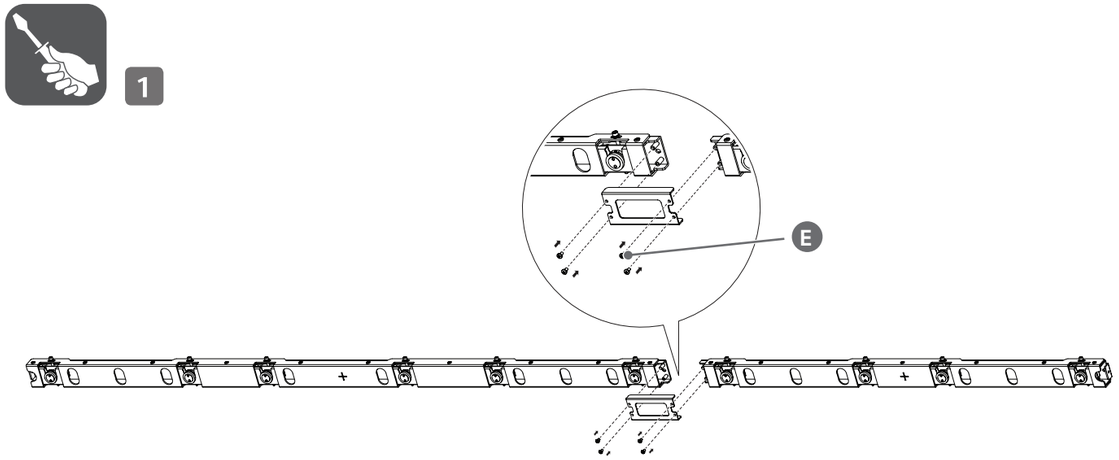

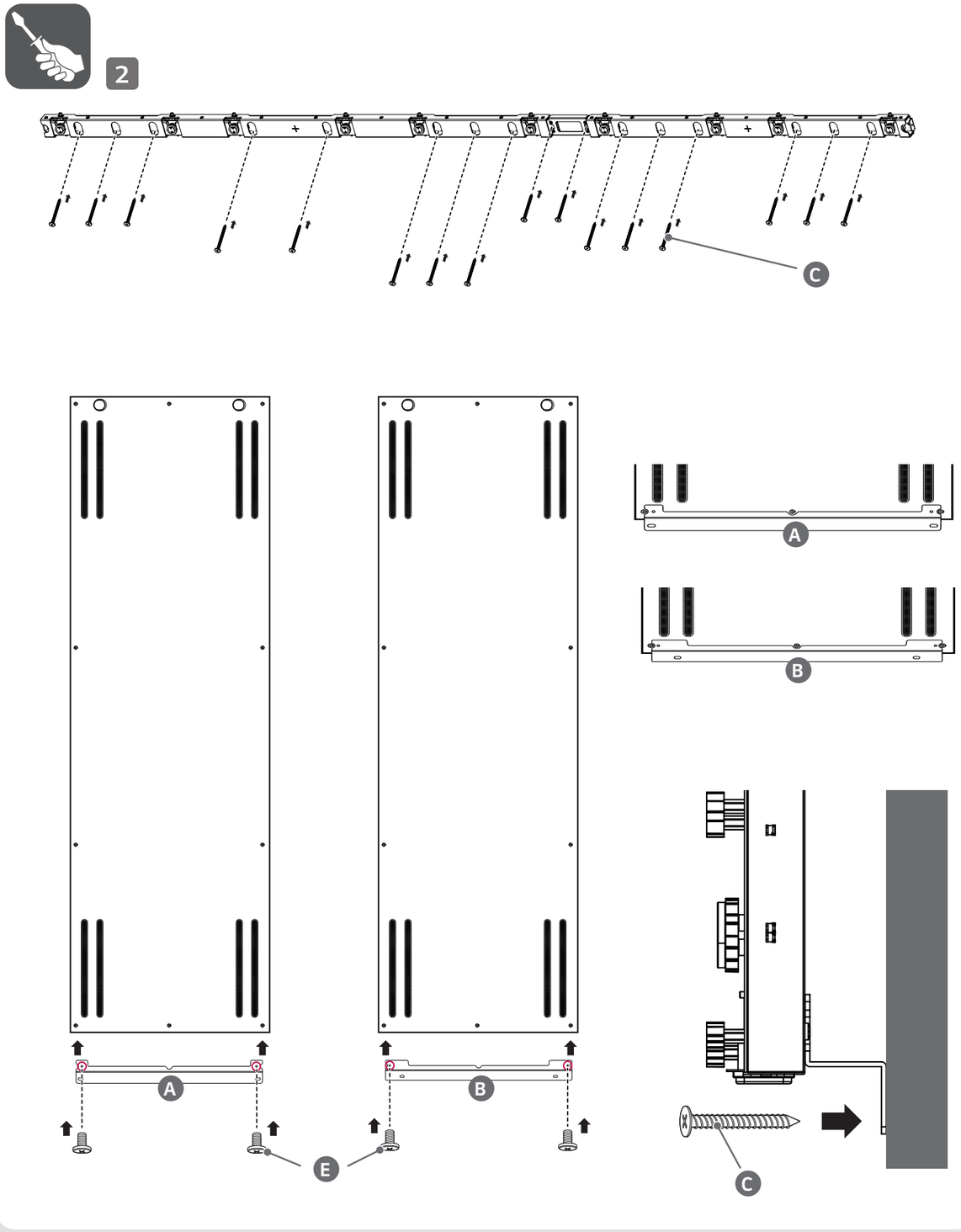

3

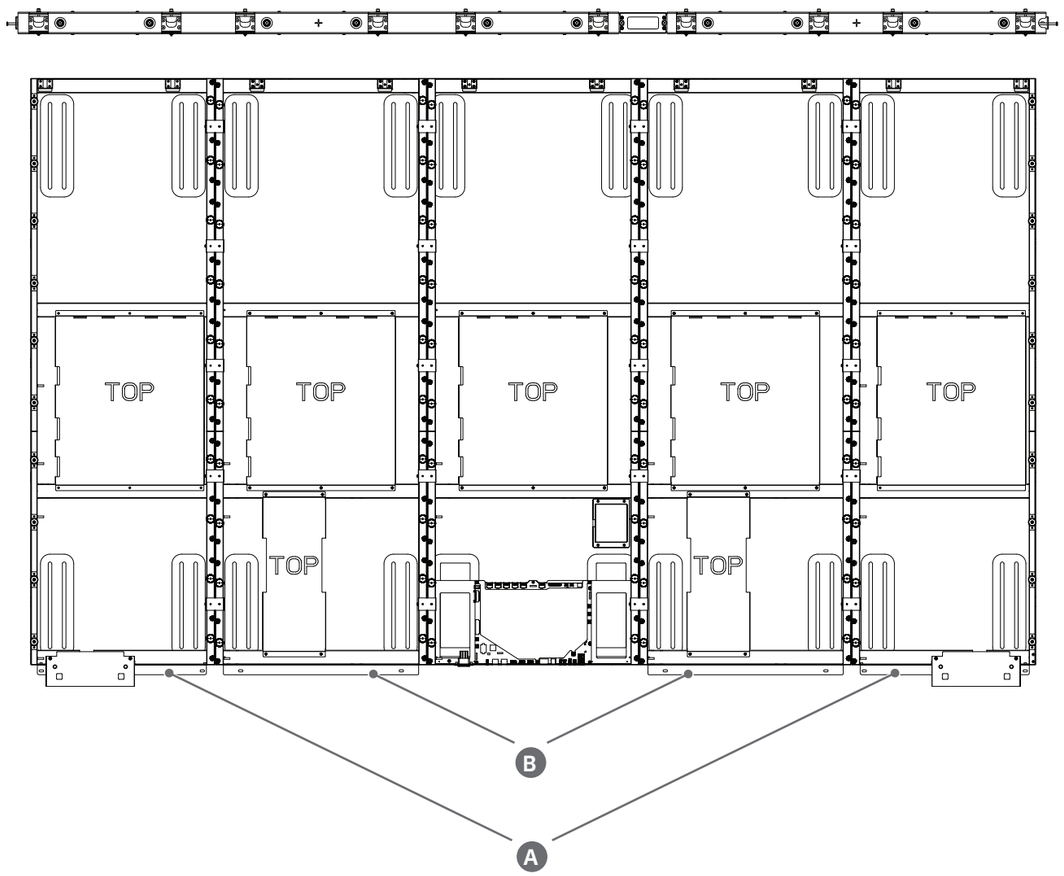

4

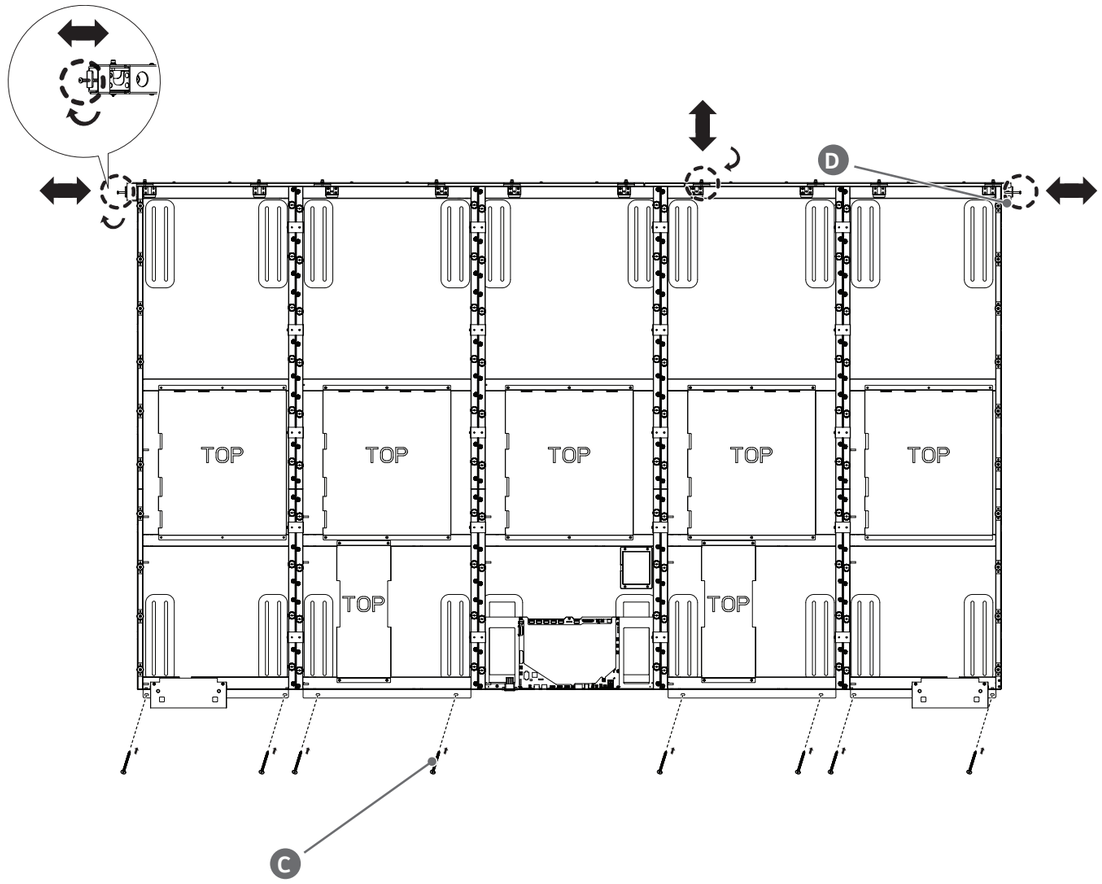

India only

Packaging Type Details as per PWM Rules

- **Brand Owner (LG Electronics India Ltd.)**

Packaging type	Company name	Registration number	Thickness
Plastic Sheet	LG Electronics India Ltd	BO-13-000-07-AAACL1745Q-22	0.05 mm and above
Multilayered bag	LG Electronics India Ltd		N/A

- **Importer (LG Electronics India Ltd.)**

Packaging type	Company name	Registration number	Thickness
Plastic Sheet	LG Electronics India Ltd	IM-13-000-07-AAACL1745Q-22	0.05 mm and above
Multilayered bag	LG Electronics India Ltd		N/A

Australia only

- **This product must be installed by a professional installer.**
- **After the installation of the product in the customer premises, fully remove all product packaging (including any expanded or moulded plastic packaging materials) and recycle or dispose of such packaging responsibly. Do not dispose any expanded plastic packaging in the household bin.**