OWNER'S MANUAL

MEDICAL MONITOR

Please read this manual carefully before operating your set and retain it for future reference.

27HK510S

www.lg.com

Copyright © 2022 LG Electronics Inc. All Rights Reserved.

CONTENTS

ON CLEANING 3

LICENSE 4

OPEN SOURCE SOFTWARE NOTICE INFORMATION 4

ASSEMBLY AND PREPARING 5

USER SETTINGS 14

TROUBLESHOOTING 29

PRODUCT SPECIFICATIONS 31

EXTERNAL CONTROLLER SETUP 38

LIMITED WARRANTY (USA) 48

LIMITED WARRANTY (CANADA) 50

Please note that this information is for proper use and safety of the equipment. The following symbols may indicate a hazardous situation in which, if not heeded, may result in serious injury or even death to the user or others, or damage to the equipment.

WARNING

- Indicates warning and safety instructions. If not adhered to, it could result in death or serious injury to the user or others.

CAUTION

- Indicates a hazardous situation which, if not heeded, may result in minor or moderate injury to the user or others, or damage to the equipment.

ON CLEANING

Recommended Cleaning Chemicals

- Isopropanol 70 %
- Ethanol 70 %
- 0.9 % NaCl solution
- Biospot 500 ppm

How to Use Cleaner

- Prior to cleaning, turn off the monitor and remove the power cable.
- Slightly dampen a soft non-abrasive cloth with a recommended cleaner, then lightly rub the screen with no more than 1 N of force.
- The cleaner could cause serious damage if it leaks inside the monitor while cleaning.
- Do not use benzene, thinner, acids or alkaline cleaners or other such solvents.
- The screen should only be cleaned by authorized personnel, using the above guidelines.
- Visually inspect the product for any contamination after cleaning. If contamination remains, repeat the cleaning process.
- If discolouration/cracks appear after cleaning, discontinue use and contact the manufacturer.
- Ensure lighting is adequate during the cleaning process.

LICENSE

Each model has different licenses. Visit *www.lg.com* for more information on the license.

The terms HDMI, HDMI High-Definition Multimedia Interface, HDMI trade dress and the HDMI Logos are trademarks or registered trademarks of HDMI Licensing Administrator, Inc.

The SuperSpeed USB Trident logo is a registered trademark of USB Implementers Forum, Inc.

"DICOM® is the registered trademark of the National Electrical Manufacturers Association for its Standards publications relating to digital communications of medical information."

OPEN SOURCE SOFTWARE NOTICE INFORMATION

To obtain the source code that is contained in this product, under GPL, LGPL, MPL, and other open source licenses that have the obligation to disclose source code, and to access all referred license terms, copyright notices and other relevant documents, please visit *https://opensource.lge.com*.

LG Electronics will also provide open source code to you on CD-ROM for a charge covering the cost of performing such distribution (such as the cost of media, shipping, and handling) upon email request to *opensource@lge.com*.

This offer is valid to anyone in receipt of this information for a period of three years after our last shipment of this product.

ASSEMBLY AND PREPARING

Product Composition

Please check whether all the components are included in the box before using the product. If there are any missing components, contact the retailer where you purchased the product.
Note that the product and related components may look different from those shown here.

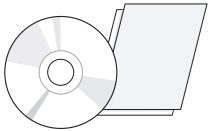

Owner's Manual/Regulatory Manual/Cards

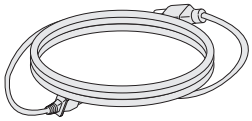

Power Cord

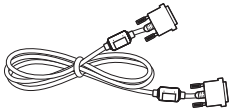

DVI Cable

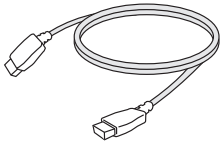

HDMI Cable

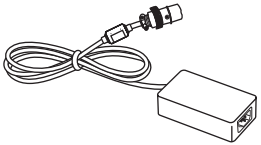

AC/DC Adaptor

⚠ CAUTION

- Always use genuine LG components to ensure safety and product performance.
- The product warranty will not cover damage or injury caused by the use of unauthorized components.
- It is recommended to use the supplied components.
- If you use generic cables not certified by LG, the screen may not display or there may be image noises.
- Only use components listed below that meet the listed standard. Unauthorized components may cause damage to and malfunction of the product.

Component	Standard
HDMI Cable	UL, Impedance 100 ohm
DVI Cable	UL, Impedance 100 ohm
Power Cord	US – Approved Medical grade regulation Others – Approved country safety regulation

- Except for the components listed above, only use AC/DC adaptors and components supplied by the manufacturer.

NOTE

- The components may look different from those illustrated here.
- Without prior notice, all product information and specifications contained in this manual are subject to change to improve the performance of the product.
- To purchase optional accessories, visit an electronics store or an online shopping site, or contact the retailer from which you purchased the product.
- The power cord provided may differ depending upon the region.

Supported Software

Check the drivers and software supported by your product and refer to the manuals on the CD enclosed in the product package.

Drivers and Software	Installation Priority
True Color Pro	Recommended

- Required and Recommended: You can download and install the latest version from the enclosed CD or from the LGE website (*www.lg.com*).

Product and LED Control buttons

Front

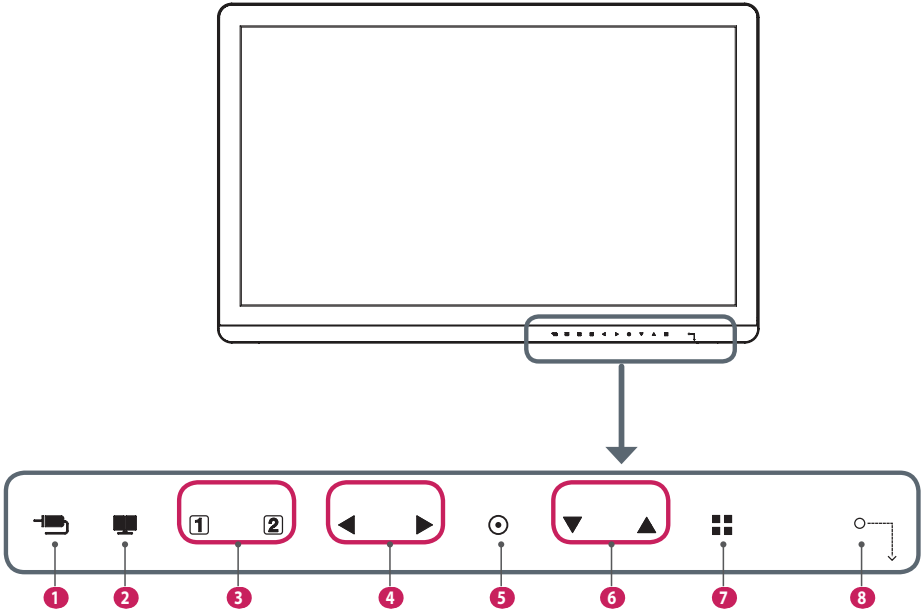

Bottom

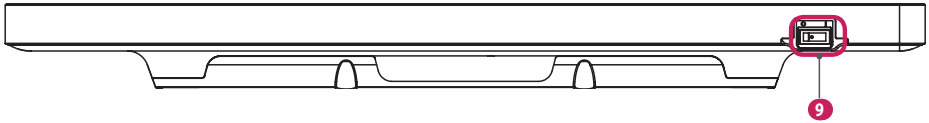

LED Control button Functions

1	**Input** • Selects the input mode.
2	**PIP/PBP** • Adjusts display mode for 2 or more screens.
3	**Hotkey 1 / 2** • Opens the [Hot key Settings] menu.
4	**Brightness ◀ / ▶** • Adjusts the screen brightness.
5	**OK/AUTO** • Selects and confirms menus or options - Automatically sets screen to optimal settings in analog video signal.
6	**Contrast ▼ / ▲** • Adjusts the screen contrast.
7	**Menu** • Displays LED Control buttons on the front panel and opens the menu mode.
8	**Power indicator** • The green indicator illuminates if the power is on. The arrow indicates the position of the power switch.
9	**Power switch** • Turns the power on/off.

NOTE

- The Power button is located at the bottom right on the front of the monitor.
- If the Control Key LED is turned off, press the Control Key button to turn the Control button LED on. When the Control Key LED is turned on, you can control the Control Key functions.

Connectors

Back

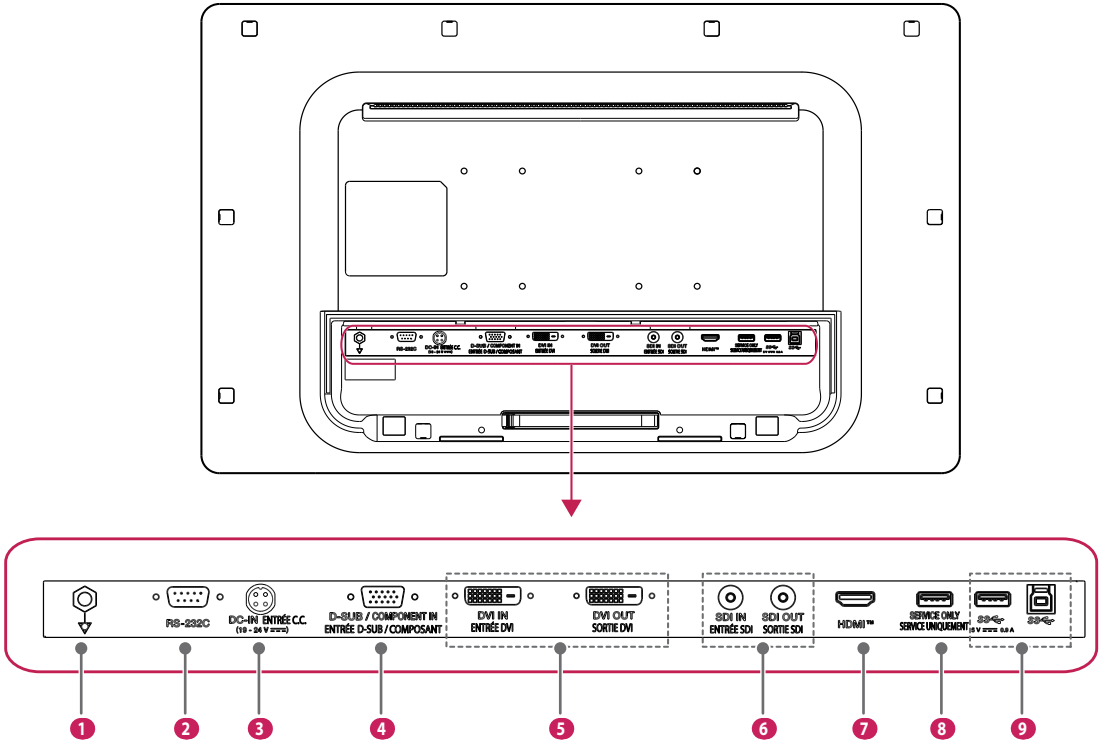

ENGLISH

1	**Potential Equalization Conductor** • Connect an equipotential plug.
2	**RS-232C** • Connect the RS-232C terminal with an external device to control the monitor.
3	**DC-IN** • Connect an AC/DC adapter. • The output of the enclosed adaptor is 19 V. • The product is designed to be used with adaptors that have an output ranging between 19-24 V. Please use the adaptors of medical standards.
4	**D-SUB IN/COMPONENT IN** • Input an analogue signal.
5	**DVI IN/DVI OUT** • Receives or transmits digital video signals.
6	**SDI IN/SDI OUT** • Receives or transmits digital video signals.
7	**HDMI IN** • Input digital video signal. • Using a DVI to HDMI / DisplayPort to HDMI cable may cause compatibility issues. • Use a certified cable that displays the HDMI logo. The screen may not appear or a connection error could occur if a non-certified cable is used. • Recommended HDMI cable types - High speed HDMI®/™ cable - High speed HDMI®/™ Ethernet cable
8	**SERVICE ONLY** • This USB port is used only for service.
9	**USB IN/USB UP** • Used for HW Calibrator (Optional Accessory) connection. • Connect peripheral device to the USB input port. • A keyboard, mouse, or USB storage device can be connected. • To use USB 3.0, connect the A-B type USB 3.0 cable to the PC. **⚠ CAUTION** Cautions when using a USB storage device. • A USB storage device which has a built-in automatic recognition program or uses its own driver might not be recognisable. • Some USB storage devices may not be supported or may not work properly. • It is recommended to use a USB hub or hard disk drive with power supplied. (If the power supplied is not enough, the USB device may not be detected properly.)

NOTE

- All signal out terminals (SDI, DVI, etc.) output a signal when the power switch of the monitor is on. When the power switch is off, no signal is outputted.
- This monitor supports the *Plug and Play feature.

* Plug and Play: A feature that allows you to add a device to your computer without the need for physical device configuration or user intervention.

- The standard of the DVI and the SDI output terminals for transmitting a screen
  - DVI OUT: Connect a up to 5-meter (16.4 ft) cable to transmit a duplicated screen to a monitor.
  - SDI OUT: Connect a 100-meter (328.0 ft) cable (BELDEN 1694) to transmit a duplicated screen to a monitor.

Installing the Monitor

Cable connection and organize

Before connecting the connectors, remove the back door as shown below.

1

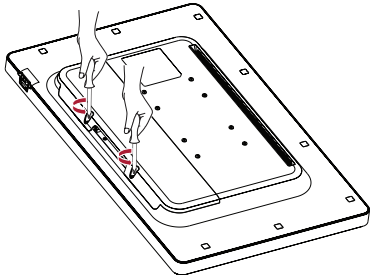

2

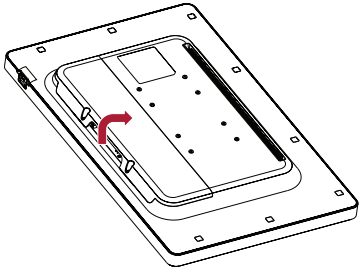

3

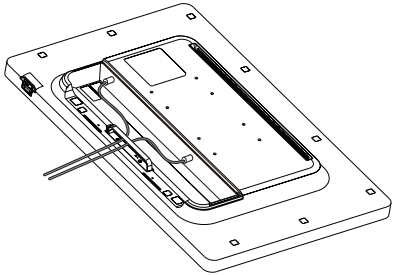

4

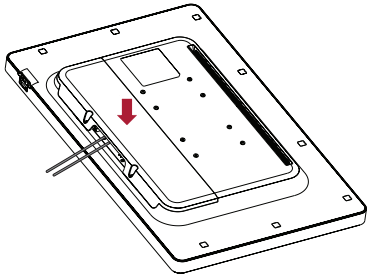

5

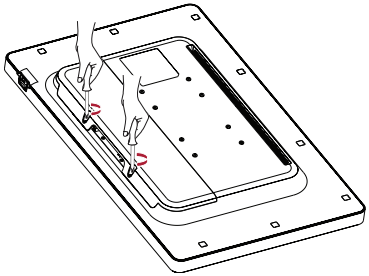

⚠ CAUTION

- When the back door is attached to the monitor, the monitor meets water resistance standards. Do not use the monitor with the back door detached, as the water resistance capability is not guaranteed without the door.
- Only fix the back door with screws when the potential equalization conductor is not connected. When the potential equalization conductor is connected, don't fix the back door with screws (you can cover the back door with a magnet only).

Installing on the Wall

Install the monitor at least 100 mm (3.9 inches) away from the wall on each side of the monitor to ensure sufficient ventilation. Detailed installation instructions can be obtained from your local dealer. Please refer to the manual to install and set up a tilting wall mounting bracket.

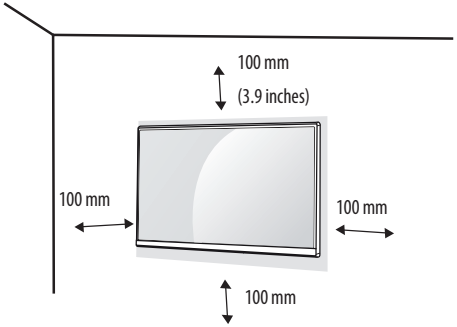

To install the monitor to a wall, attach a wall mount plate (optional) to the back of the monitor.

Make sure that the wall mount plate (optional) is securely fixed to the monitor and to the wall.

Installing the Wall Mount Plate

This monitor meets the specifications for the wall mount plate or other compatible devices.

Wall Mount	**mm**	100 x 100
	inches	3.9 x 3.9
Standard screw		M4 x L10
Required screws		4
Wall mount plate (optional)		RW120 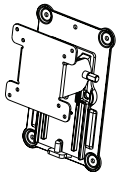

NOTE

- A non-VESA standard screw may damage the product and cause the monitor to fall. LG Electronics is not liable for any accidents relating to the use of non-standard screws.
- The wall mount kit includes the installation guide and all necessary parts.
- The wall mounting bracket is optional. You can obtain optional accessories from your local dealer.
- The length of the screw may differ for each wall mounting bracket. If you use screws longer than the standard length, it may damage the inside of the product.
- For more information, please refer to the user manual for the wall mounting bracket.
- Be careful not to apply too much force while mounting the wall mount plate as it may cause damage to the screen.
- Remove the stand before installing the monitor on a wall mount by performing the stand attachment in reverse.

⚠ CAUTION

- Disconnect the power cord before moving or installing the monitor. There is risk of electric shock.
- Installing the monitor on the ceiling or on a slanted wall may result in the monitor falling off, which could lead to injury. Use an authorized LG wall mount and contact the local dealer or qualified personnel.
- To prevent injury, this apparatus must be securely attached to the wall in accordance with the installation instructions.
- Applying excessive force when tightening screws may damage the monitor. Such damage is not covered by the product warranty.
- Use the wall mounting bracket and screws that confirm to VESA standards. Damage caused by the use or misuse of inappropriate components is not covered by the product warranty.
- When measured from the back of the monitor, the length of each installed screw must be 8 mm (0.3 inches) or less.

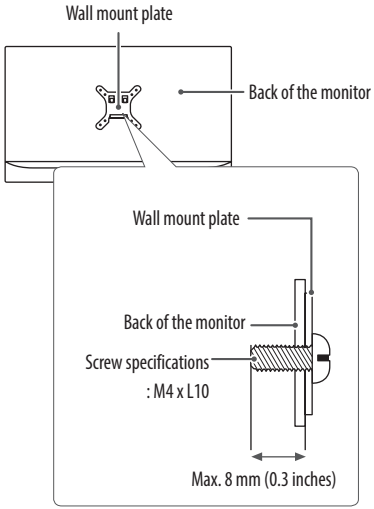

Precautions for Connecting the Power Cord

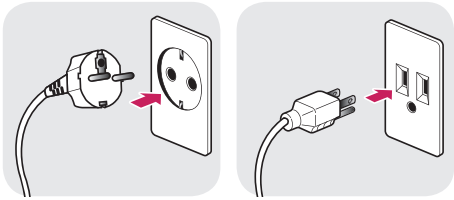

100-240 V ~

- Make sure to use the power cord that is provided in the product package. Connect the cord to a grounded power outlet.
- If you need another power cord, please contact your local dealer or the nearest retail store.

USER SETTINGS

Activating the Quick Menu

1 Press (⊞) to activate the LED Control Button. When the LED Control button is activated, press (⊞) to show the OSD Quick Menu.
2 Among the LED Control Button, press (◀, ▶) to move to the left or right or (▼, ▲) to move to the bottom or top or (◎) to set options.
3 In order to exit from the OSD Menu, press the LED Control Button (⊞) or select [Exit].

The applicable setting options are as shown below.

Quick Menu Settings	Explanation
[Exit]	Closes the Quick Menu.
[Input]	Selects the applicable input mode.
[Picture Mode]	Selects the [Picture Mode]. **NOTE** • If the [Picture Mode] is not the [Custom] mode, [Gamma] and [Color Temp] will be deactivated.
[Gamma]	Selects the screen's [Gamma].
[Color Temp]	Selects the screen's [Color Temp].
[All Settings]	Enters the All Settings menu.

CAUTION

• The Monitor OSD (On Screen Display) may differ from the description in the User Manual.

[Quick Settings]

1 Press (⊞) to activate the LED Control Button. When the LED Control Button is activated, press (⊞) and select [All Settings] to show the complete OSD Menu.
2 Among the LED Control Button, press (◀, ▶) to move to the left or right or (▼, ▲) to move to the bottom or top to go to the [Quick Settings].
3 Configure the options following the instructions that appear in the bottom right corner.
4 To configure an upper menu or another item, press the LED Control Button (◀) or press (◎) to move to the settings.
5 In order to exit from the OSD Menu, press the LED Control Button (⊞) or press (◀).

The applicable setting options are as shown below.

[All Settings] > [Quick Settings]	Explanation	
[Brightness]	Adjusts screen brightness. **NOTE** • Press the ▼ button to toggle between [Turn on 'Brightness Stabilization']/[Turn off 'Brightness Stabilization']. • When [Brightness Stabilization] is [On], the [Brightness] adjustment function is deactivated. • When [Brightness Stabilization] is [On], [SMART ENERGY SAVING] and [DFC] functions are deactivated. • When [Picture Mode] is set as [DICOM], or [Gamma] is set as [DICOM Gamma Curve] Setting, the [Brightness] adjustment function is deactivated.	
[Contrast]	Adjusts the color contrast of the screen.	
[Hot key Settings]	Designate a hotkey for screen image settings. After setting the hotkey, use the hotkey in the LED Control Button to enable the set menu. ([PIP Size], [Gamma], [Mono], [Color Temp], [Black Stabilizer], [Screen Zoom], [Off])	
	[Hotkey 1]	Select a function to use with [Hotkey 1].
	[Hotkey 2]	Select a function to use with [Hotkey 2].

[All Settings] > [Quick Settings]	Explanation	
[User Preset]	User Preset allows the user to save or load up to 10 picture quality settings for multiple connected devices in each preset. **NOTE** • You can use User Preset to import or save items in [Picture Adjust] and [Color Adjust] of the [Picture] menu.	
	[User Name]	Allows the user to change and register a user name (Preset 1 ~ Preset 3, User 1 ~ User 7) as the user wants. The user can enter a user name to be registered by using the screen keyboard. Preset 1 ~ Preset 3 are factory-set user names as samples and the user can change the names.
	[Load User Settings]	Allows the user to change the picture quality settings by loading the User Preset settings.
	[Save User Settings]	Saves the current picture quality settings in the corresponding User Preset. Preset 1 ~ Preset 3 are factory-set values as samples and the user can change the values. • Preset 1: Use this preset for bluish color. • Preset 2: Use this preset for greenish color and brighter low-gradation. • Preset 3: Use this preset to soften the red tone. • User 1 ~ User 7: Initial values are the same as the factory settings.
	[Default User Settings]	Loads the initial basic picture settings.
	[User Preset Reset]	Initializes User Preset settings. • Initializes the existing user name and user settings to be restored to factory settings (Preset 1 ~ Preset 3, User 1 ~ User 7).

[Input]

1 Press (⠿) to activate the LED Control Button. When the LED Control Button is activated, press (⠿) and select [All Settings] to show the complete OSD Menu.
2 Among the LED Control Button, press (◀, ▶) to move to the left or right or (▼, ▲) to move to the bottom or top to go to the [Input].
3 Configure the options following the instructions that appear in the bottom right corner.
4 To configure an upper menu or another item, press the LED Control Button (◀) or press (◎) to move to the settings.
5 In order to exit from the OSD Menu, press the LED Control Button (⠿) or press (◀).

The applicable setting options are as shown below.

[All Settings] > [Input]	Explanation						
[Input List] > [Main Input List] [Sub Input List]	Selects the input mode.						
	PBP / PIP Connection		Sub				
			D-SUB	DVI-D	HDMI	SDI	Component
	Main	D-SUB	-	0	0	0	-
		DVI-D	0	-	0	0	0
		HDMI	0	0	-	0	0
		SDI	0	0	0	-	0
		Component	-	0	0	0	-

[All Settings] > [Input]	Explanation		
[Aspect Ratio]	Adjusts the aspect ratio of the screen. ([Full Wide], [Original], [Just Scan]) **NOTE** • The display may look the same for [Full Wide], [Original] and [Just Scan] options at the recommended resolution (1920 x 1080).		
	[Main Aspect Ratio]	[Full Wide]	Displays the image to fit the PBP / PIP screen, regardless of the video signal input.
		[Original]	Displays on the PBP / PIP screen in the aspect ratio of the video signal input.
	[Sub Aspect Ratio]	[Full Wide]	Displays the image to fit the PBP / PIP screen, regardless of the video signal input.
		[Original]	Displays on the PBP / PIP screen in the aspect ratio of the video signal input.
[PBP / PIP]	Adjusts display mode for 2 or more screens.		
[PIP Size]	Adjusts the size of PIP. ([Small], [Medium], [Large])		
[Main/Sub Screen Change]	Converts between the Main and the Sub in the [PBP / PIP] mode.		
[Failover Input Switch]	[Main input] is changed to [Failover Input] when there is no signal at the [Main Input].		
	[Failover Input Switch]	The [Failover Input Switch] input will be operated or turned off.	
	[Main Input]	Select [Main Input] source.	
	[Failover Input]	Select [Failover Input] source.	

NOTE

- If not using the [PBP / PIP] feature, [PIP Size], [Main/Sub Screen Change] are deactivated.
- [Failover Input Switch] feature only supports digital signal.

[Picture]

1 Press (⠿) to activate the LED Control Button. When the LED Control Button is activated, press (⠿) and select [All Settings] to show the complete OSD Menu.
2 Among the LED Control Button, press (◀, ▶) to move to the left or right or (▼, ▲) to move to the bottom or top to go to the [Picture].
3 Configure the options following the instructions that appear in the bottom right corner.
4 To configure an upper menu or another item, press the LED Control Button (◀) or press (◎) to move to the settings.
5 In order to exit from the OSD Menu, press the LED Control Button (⠿) or press (◀).

The applicable setting options are as shown below.

[All Settings] > [Picture]	Explanation	
[Picture Mode]	[Custom]	Allows the user to adjust each element. The color mode of the main menu can be adjusted.
	[Mono]	Mono (black and white) color mode.
	[sRGB]	The standard RGB color mode for monitors and printers.
	[EBU]	The standard TV PAL color mode for broadcasting.
	[REC709]	The standard HDTV color mode for broadcasting.
	[SMPTE-C]	The standard TV NTSC color mode for broadcasting.
	[DICOM]	A mode that optimizes the screen settings so you can view images for medical use.
	[Calibration 1]	Configures to the last calibrated (corrected) screen.
	[Calibration 2]	Configures to a previously calibrated (corrected) screen.
	NOTE • The [Brightness Stabilization] function is operated in [Custom]. • [Calibration 2]: If you use Calibration after installing the **True Color Pro** program, the applicable menu will be activated.	

[All Settings] > [Picture]	Explanation		
[Picture Adjust]	[Brightness]	Adjusts screen brightness. **NOTE** • Press the ▼ button to toggle between [Turn on 'Brightness Stabilization']/[Turn off 'Brightness Stabilization']. • When [Brightness Stabilization] is [On], the [Brightness] adjustment function is deactivated. • When [Brightness Stabilization] is [On], [SMART ENERGY SAVING] and [DFC] functions are deactivated. • When [Picture Mode] is set as [DICOM], or [Gamma] is set as [DICOM Gamma Curve] Setting, the [Brightness] adjustment function is deactivated.	
	[Contrast]	Adjusts the color contrast of the screen.	
	[Sharpness]	Adjusts the sharpness of the screen.	
	[Brightness Stabilization]	Maintains the brightness configured of the screen.	
		[On]	Automatically adjusts brightness.
		[Off]	Deactivates the applicable function and the user can adjust the brightness.
	[SUPER RESOLUTION+]	[High]	Select this option for crystal clear images.
		[Middle]	The optimized picture quality is displayed when a user wants images between low and high modes for comfortable viewing.
		[Low]	The optimized picture quality is displayed when a user wants smooth and natural images.
		[Off]	Select this option for the normal user experience. Deactivates the [SUPER RESOLUTION+] function.
	[Black Level]	Sets up the offset level. (HDMI only) • Offset: as a reference for a video signal, this is the darkest color the monitor can display.	
		[High]	Maintains the current screen contrast range.
		[Low]	Reduces the black levels and increases the white levels of the current screen contrast range.

[All Settings] > [Picture]	Explanation		
[Picture Adjust]	[DFC]	[On]	Automatically adjusts brightness depending on the screen.
		[Off]	Deactivates the [DFC] function.
	[Response Time]	Sets a response time for displayed pictures based on the movement of the picture on the screen. In a normal environment, it is recommended that you set [Fast]. For images with a lot of motion, it is recommended that you set [Faster]. But, when [Faster] is set, it may cause an afterimage.	
		[Faster]	Sets the response time to Faster.
		[Fast]	Sets the response time to Fast.
		[Normal]	Sets the response time to Normal.
		[Off]	Does not use the response time improvement feature.
	[Black Stabilizer]	Adjusts the black level to clearly see objects on a dark screen. Increasing the [Black Stabilizer] value brightens the low grey levels on the screen. (You can easily distinguish objects on a dark game screen.) Reducing the [Black Stabilizer] value darkens the low grey levels and increases the dynamic contrast on the screen.	
	[Uniformity]	Automatically adjusts the brightness uniformity of the screen. **NOTE** • If [Uniformity] is activated, the screen may become darker.	
		[On]	Activates the [Uniformity] function.
		[Off]	Deactivates the [Uniformity] function.

[All Settings] > [Picture]	Explanation		
[Color Adjust]	[Gamma]	Set your own gamma value. ([Gamma 1.8], [Gamma 2.0], [Gamma 2.2], [Gamma 2.4], [Gamma 2.6], [DICOM Gamma Curve]) Higher gamma settings mean a darker image is displayed or vice versa.	
	[Color Temp]	Set your own color temperature. ([Custom], [6500K], [7500K], [9300K], [Manual])	
		[Custom]	Users can customize the red, green and blue colors.
		[6500K]	Indicates the screen color with a 6500K red color temperature.
		[7500K]	Sets the screen color between red and blue with a 7500K color temperature.
		[9300K]	Indicates the screen color with 9300K blue color temperature.
		[Manual]	Adjusts the color temperature in 500K increments. (However, supports 9300K instead of 9500K)
	[Red]	You can customize the picture color using red, green and blue colors.	
	[Green]		
	[Blue]		
	[Six Color]	Meets the user requirements for colors by adjusting the hue and saturation of the six colors (red, green, blue, cyan, magenta and yellow) and then saving the settings.	
		Hue	Adjusts the tint of the screen colors.
		Saturation	The lower the screen's color sharpness value, the less sharper and brighter the colors become. The higher the value, the sharper and darker the colors become.
[Configuration Adjust]	[Horizontal] [Vertical]	Adjusts the position of the screen.	
	[Clock] [Phase]	Improves the sharpness and stability of the screen.	

[All Settings] > [Picture]	Explanation
[Resolution]	A user can set the desired resolution. This option is available only when the screen resolution of the computer is set as below (only for the D-SUB). **NOTE** • When the resolution selected by a user is different from the resolution outputted by the PC per computer, the function will be deactivated.
	[1024 x 768], [1280 x 768], [1360 x 768], [1366 x 768], [Off]
	[1280 x 960], [1600 x 900], [Off]
	[1440 x 900], [1600 x 900], [Off]
[Picture Reset]	Returns color to the default settings.

[General]

1 Press (⊞) to activate the LED Control Button. When the LED Control Button is activated, press (⊞) and select [All Settings] to show the complete OSD Menu.
2 Among the LED Control Button, press (◀, ▶) to move to the left or right or (▼, ▲) to move to the bottom or top to go to the [General].
3 Configure the options following the instructions that appear in the bottom right corner.
4 To configure an upper menu or another item, press the LED Control Button (◀) or press (◎) to move to the settings.
5 In order to exit from the OSD Menu, press the LED Control Button (⊞) or press (◀).

The applicable setting options are as shown below.

[All Settings] > [General]	Explanation	
[Language]	Sets the menu screen to the desired language.	
[SMART ENERGY SAVING]	Conserve energy by using luminance compensation algorithm.	
	[High]	Saves energy using the high-efficiency [SMART ENERGY SAVING] feature.
	[Low]	Saves energy using the low-efficiency [SMART ENERGY SAVING] feature.
	[Off]	Disables the [SMART ENERGY SAVING] function.
[HW Calibration]	[RS-232C] and the [HW Calibration] cannot be used at the same time.	
	[On]	The HW Calibration function will operate.
	[Off]	The HW Calibration function will be turned off.
[RS-232C]	[RS-232C] and the [HW Calibration] cannot be used at the same time.	
	[Serial Port]	The [RS-232C] function will be operated or turned off.
	[Set ID]	Adjusts [Set ID]. (The scope of adjustment: 1-10)

[All Settings] > [General]	Explanation	
[LED Control Button]	Adjusts the ON time of the Control Button. ([Always On], [20Sec Time Out], [10Sec Time Out], [5Sec Time Out])	
[DVI Power Supply]	Supplies power to a device used by connecting to a DVI input terminal in the form of dongle without power.	
	[On]	Activates the [DVI Power Supply] function.
	[Off]	Deactivates the [DVI Power Supply] function.
[Hot key Settings]	Designate a hotkey for screen image settings. After setting the hotkey, use the hotkey in the LED Control Button to enable the set menu. ([PIP Size], [Gamma], [Mono], [Color Temp], [Black Stabilizer], [Screen Zoom], [Off])	
	[Hotkey 1]	Select a function to use with [Hotkey 1].
	[Hotkey 2]	Select a function to use with [Hotkey 2].

[All Settings] > [General]	Explanation	
[User Preset]	User Preset allows the user to save or load up to 10 picture quality settings for multiple connected devices in each preset. **NOTE** • You can use User Preset to import or save items in [Picture Adjust] and [Color Adjust] of the [Picture] menu.	
	[User Name]	Allows the user to change and register a user name (Preset 1 ~ Preset 3, User 1 ~ User 7) as the user wants. The user can enter a user name to be registered by using the screen keyboard. Preset 1 ~ Preset 3 are factory-set user names as samples and the user can change the names.
	[Load User Settings]	Allows the user to change the picture quality settings by loading the User Preset settings.
	[Save User Settings]	Saves the current picture quality settings in the corresponding User Preset. Preset 1 ~ Preset 3 are factory-set values as samples and the user can change the values. • Preset 1: Use this preset for bluish color. • Preset 2: Use this preset for greenish color and brighter low-gradation. • Preset 3: Use this preset to soften the red tone. • User 1 ~ User 7: Initial values are the same as the factory settings.
	[Default User Settings]	Loads the initial basic picture settings.
	[User Preset Reset]	Initializes User Preset settings. • Initializes the existing user name and user settings to be restored to factory settings (Preset 1 ~ Preset 3, User 1 ~ User 7).

[All Settings] > [General]	Explanation	
[Auto Screen Off]	Automatically turns off the screen when there is no monitor signal for a set time period.	
	[On]	Activates [Auto Screen Off] function.
	[Off]	Deactivates [Auto Screen Off] function.
[OSD Lock]	A function for restricting menu configuration and adjustment.	
	[On]	Turns on [OSD Lock].
	[Off]	Turns off [OSD Lock].
	NOTE • Deactivates all functions except the [Quick Settings] menu's [Brightness], [Contrast] functions and [Input] menu's [Input List], [Aspect Ratio], [PBP / PIP], [Failover Input Switch] functions, and the [General] menu's [OSD Lock] and [Information] functions.	
[Information]	The following display information will be shown; [Total Power On Time], [Resolution].	
[Reset]	[Do you want to reset your settings?]	
	[No]	Cancels the selection.
	[Yes]	Restores the screen settings to the default settings when your monitor was first purchased.

[Auto Configuration]

1 Press (⊞) to activate the LED Control Button. When the LED Control Button is activated, press (⊞) and select [All Settings] to show the complete OSD Menu.
2 Among the LED Control Button, press (◀, ▶) to move to the left or right or (▼, ▲) to move to the bottom or top to go to the [Auto Configuration].
3 Configure the options following the instructions that appear in the bottom right corner.
4 To configure an upper menu or another item, press the LED Control Button (◀) or press (◎) to move to the settings.
5 In order to exit from the OSD Menu, press the LED Control Button (⊞) or press (◀).

The applicable setting options are as shown below.

[All Settings] > [Auto Configuration]	Explanation	
[Do you want to Auto Configuration?]	[No]	Cancels the selection.
	[Yes]	Automatically sets screen to optimal settings.

TROUBLESHOOTING

Nothing is displayed on the screen.

Problem	Action
Is the monitor's power cord plugged in?	• Check if the power cord is correctly plugged into the power outlet.
Is the power indicator on?	• Check the power cable connection and turn on the power switch.
Is the power indicator displaying as green?	• Check if the input setting is correct. (▪▪ > [All Settings] > [Input])
Is the [Out of Range] message being displayed?	• This occurs when signals transferred from the PC (graphics card) are out of the horizontal or vertical frequency range of the monitor. Please see the <PRODUCT SPECIFICATIONS> section of this manual to set the appropriate frequency.
Is the [No Signal] message displayed?	• This is displayed when the signal cable between the PC and the monitor is missing or disconnected. Check the cable and reconnect it.

The screen retains an image.

Problem	Action
Does image sticking occur even when the monitor is turned off?	• Displaying a still image for a prolonged time may cause damage to the screen, resulting in the retention of the image. • To extend the lifetime of the monitor, use a screensaver.

The screen is unstable and shakes. / There are shadowy traces left on the screen.

Problem	Action
Did you select the appropriate resolution?	• If the selected resolution is HDMI 1080i 60/50 Hz (interlaced), the screen may be flickering. Change the resolution to 1080p or the recommended resolution.

The display color is abnormal.

Problem	Action
Does the display appear discolored (16 colors)?	• Set the number of colors to 24 bit (true colors) or higher: In Windows Control Panel > Display > Settings > Color Quality (May differ depending on your operating system.)
Does the display color appear unstable or monochrome?	• Check if the signal cable is connected properly. Reconnect the cable or reinsert the PC's graphics card.
Are there spots on the screen?	• When using the monitor, pixilated spots (red, green, blue, white or black) may appear on the screen. This is normal for an LCD screen. It is not an error, nor is it related to the monitor's performance.

The image is displayed abnormally.

Problem	Action
Does the screen area appear abnormal?	• If you want to automatically configure display images to optimal settings, enter the [Auto Configuration] function and select [Yes].
Do you see vertical lines on the screen?	
Does the screen display horizontal noise, or does the text appear blurred?	

PRODUCT SPECIFICATIONS

Specifications are subject to change without notice.

The symbol ~ means alternating current, and the symbol ⎓ means direct current.

LCD Screen	Type	TFT (Thin Film Transistor) LCD (Liquid Crystal Display) Screen
	Pixel Pitch	0.3114 mm x 0.3114 mm
Resolution	Max Resolution	1920 x 1080 @ 60 Hz
	Recommended Resolution	
Video Signal	Horizontal Frequency	30 kHz - 83 kHz
	Vertical Frequency	56 Hz - 75 Hz
Input Connector	Potential Equalization Conductor, RS-232C, DC-IN (19 - 24 V ⎓), D-SUB/COMPONENT IN, DVI IN, SDI IN, HDMI IN, SERVICE ONLY, USB (SS⟷ 5 V ⎓ 0.9 A), USB (SS⟷)	
Output Connector	DVI OUT, SDI OUT	
Power Sources	Power Rating	19 - 24 V ⎓ 6.32 - 5.0 A
	Power Consumption	Max. 120 W* Off Mode: ≤ 0.3 W
AC-DC Adaptor	Manufacturer: Asian Power Devices Inc. (APD) Model: DA-120D19	
	Input: 100-240 V~ 50-60 Hz, 1.8-0.7 A Output: 19 V ⎓ 6.32 A Classification by protection type against Electric Shock: Class I equipment	
	NOTE - Connect an AC/DC adapter. - The output of the enclosed adaptor is 19 V. - The product is designed to be used with adaptors that have an output ranging between 19-24 V. Please use the adaptors of medical standards.	

Environmental Conditions	Operating Conditions	Temperature	0 °C to 40 °C (32 °F to 104 °F)
		Humidity	0 % to 80 %
		Pressure	700 hPa to 1060 hPa
	Storage / Transport Conditions	Temperature	-20 °C to 60 °C (-4 °F to 140 °F)
		Humidity	0 % to 85 %
		Pressure	500 hPa to 1060 hPa

Monitor Size		
Dimensions (Width x Height x Depth)	656.4 x 412.9 x 62.2 (mm)	25.8 x 16.2 x 2.4 (inches)
Weight (Without Packaging)	7.7 (kg)	16.9 (lbs)

Medical Specifications	Classification by protection type against Electric Shock	Class I equipment
	Classification according to the degree of protection against ingress of water or particulate matter	Front: IP35 Except for Front: IP32
	Mode of operation	Continuous Operation
	Environment of Use	This equipment is not suitable for use in the presence of flammable anesthetic or oxygen.

* The Operating Mode of Power Consumption is measured with LGE test standard. (Full White pattern, Maximum resolution)
* The Power Consumption level can be different by operating condition and monitor setting.

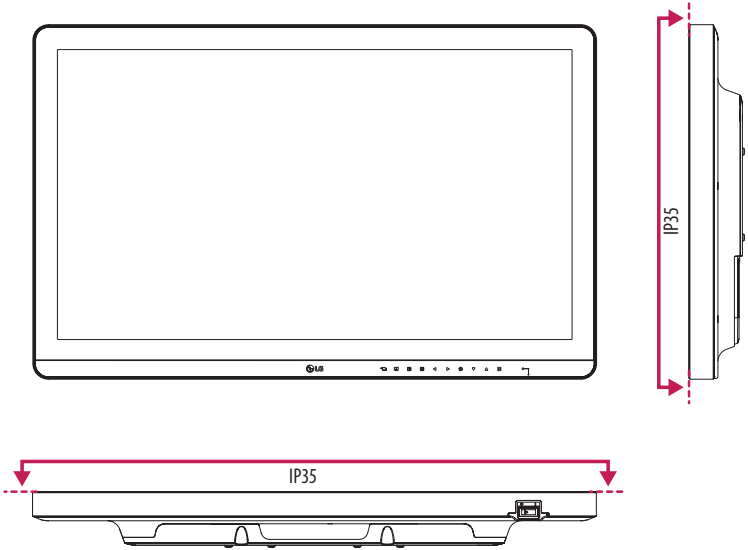
IP35
IP35

Support Mode (Preset Mode - PC)

ENGLISH

D-SUB / DVI / HDMI

Resolution	Horizontal Frequency (kHz)	Vertical Frequency (Hz)	Polarity (H/V)	Remarks
720 x 400	31.468	70.08	-/+	
640 x 480	31.469	59.94	-/-	
640 x 480	37.5	75	-/-	
720 x 480	31.47	59.94	-/-	HDMI only
800 x 600	37.879	60.317	+/+	
800 x 600	46.875	75.0	+/+	
1024 x 768	48.363	60.0	-/-	
1024 x 768	60.023	75.029	+/+	
1152 x 864	67.500	75.000	+/+	
1280 x 720	45	60	+/+	
1280 x 800	49.306	59.910	+/-	
1280 x 1024	63.981	60.02	+/+	
1280 x 1024	79.976	75.025	+/+	
1400 x 1050	64.744	59.948	+/-	
1440 x 900	55.469	59.901	+/-	
1600 x 900	60.00	60.00	+/+	
1680 x 1050	65.290	59.954	-/+	
1920 x 1080	67.50	60	+/+	

Support Mode (Video)

Vertical dimensions	Vertical Frequency (Hz)	HDMI	SDI	Remarks
480i	59.94/60	-	0	
480p	59.94/60	0	-	
576p	50	0	-	
576i	50	-	0	
720p	59.94/60	0	0	
720p	50	0	0	
1080i	59.94/60	-	0	
1080p	59.94/60	0	0	
1080i	50	-	0	
1080p	50	0	0	
1080p	29.97/30	0	0	

Support Mode (Component)

Resolution	Horizontal Frequency (kHz)	Vertical Frequency (Hz)
720 x 480	15.730	59.940
720 x 480	15.750	60.000
720 x 480	31.470	59.940
720 x 480	31.500	60.000
720 x 576	15.625	50.000
720 x 576	31.250	50.000
1280 x 720	44.960	59.940
1280 x 720	45.000	60.000
1280 x 720	37.500	50.000
1920 x 1080	33.720	59.940
1920 x 1080	33.750	60.000
1920 x 1080	28.125	50.000
1920 x 1080	56.250	50.000
1920 x 1080	67.432	59.940
1920 x 1080	67.500	60.000

NOTE

- Vertical Frequency: In order to display an image, the screen must be refreshed dozens of times per second, like a fluorescent lamp. The number of times the screen is refreshed per second is called vertical frequency, or refresh rate, and is represented by Hz.
- Horizontal Frequency: The time it takes to display one horizontal line is called the horizontal cycle. If 1 is divided by the horizontal interval, the result is the number of horizontal lines displayed per second. This is called horizontal frequency and is represented by kHz.
- Check if the graphics card's resolution or frequency is within the range allowed by the monitor and in Windows set it to the recommended (optimal) resolution in Control Panel > Display > Settings. (May differ depending on your operating system (OS).)
- Not setting the video card to the recommended (optimal) resolution may result in blurred text, a dimmed screen, a truncated display area or misalignment of the display.
- The setting methods may be different depending on the computer or operating system, and some resolutions may not be available depending on the performance of the graphics card. If this is the case, contact the manufacturer of the computer or graphics card for assistance.
- Normal graphics cards do not support 1920 x 1080 resolution. If the resolution cannot be displayed, contact the manufacturer of your graphics card.

Power indicator

Mode	LED Color
On Mode	Green

EXTERNAL CONTROLLER SETUP

The actual product may differ from the picture shown.

Connect the RS-232C (serial connector) of the PC to the RS-232C IN connector at the back of the monitor.

Purchase a cable to connect the RS-232C connectors, as the cable is not provided as an accessory.

Use an RS-232C cable to remotely control the monitor (see Figure 1).

(PC) **(Monitor)**

Figure 1: RS-232C Connection Diagram

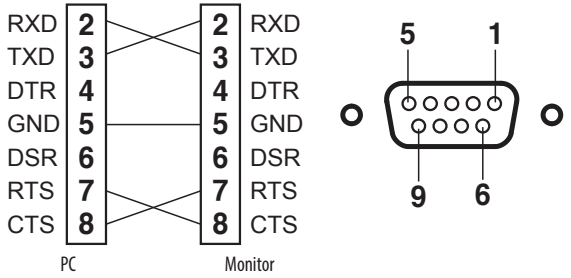

* There are no connections to Pin 1 and Pin 9.

Set ID Function

This function allows you to assign a unique ID to the monitor to control it remotely from your PC.

Please refer to the "Transmission/Reception Protocol".

1 Press the (⠿) button and select [All Settings] > [General] > [RS-232C].
2 Set [Serial Port] to [On].
3 Use the ◀, ▶, ▼, ▲ buttons to select [Set ID]. Then press the (◎) button.
4 Select a [Set ID] to assign. Then press the (◎) button. The [Set ID] can be a value from 1 to 10.
5 In order to exit from the OSD Menu, press the LED Control Button (⠿) or press (◀).

Communication Parameters

- Baud rate: 9600 bps (UART)
- Data length: 8 bits
- Parity bit: None
- Stop bit: 1 bit
- Communication code: ASCII code
- Crossed (reverse) cable used.

Command Reference List

Command	Command1	Command2	Data (Hexadecimal)
01. Power	k	a	00 ~ 01
02. Screen Mute	k	d	00 ~ 01
03. Input select (Main)	k	b	00 ~ 04
04. Input select (Sub)	k	y	00 ~ 04
05. [Aspect Ratio] (Main)	k	c	00 ~ 02
06. [Aspect Ratio] (Sub)	k	o	00 ~ 01
07. [PBP / PIP]	k	n	00 ~ 05
08. [PIP Size]	k	p	00 ~ 02
09. [Main/Sub Screen Change]	m	a	01
10. [Picture Mode]	d	x	00 ~ 08
11. [Brightness]	k	h	00 ~ 64
12. [Contrast]	k	g	00 ~ 64
13. [Sharpness]	k	k	00 ~ 64
14. [Brightness Stabilization]	m	b	00 ~ 01
15. [SUPER RESOLUTION+]	m	c	00 ~ 03
16. [Black Level]	m	d	00 ~ 01
17. [DFC]	m	f	00 ~ 01
18. [Response Time]	m	g	00 ~ 03
19. [Black Stabilizer]	m	h	00 ~ 64
20. [Uniformity]	m	i	00 ~ 01

Command	Command1	Command2	Data (Hexadecimal)
21. [Gamma]	m	j	00 ~ 05
22. [Color Temp]	k	u	00 ~ 04
23. [Red]	j	w	00 ~ 64
24. [Green]	j	y	00 ~ 64
25. [Blue]	j	z	00 ~ 64
26. [Language]	f	i	00 ~ 10
27. [SMART ENERGY SAVING]	m	k	00 ~ 02
28. [LED Control Button]	m	l	00 ~ 03
29. [DVI Power Supply]	m	m	00 ~ 01
30. [Auto Screen Off]	m	n	00 ~ 01
31. [OSD Lock]	k	m	00 ~ 01
32. [Reset]	f	k	00 ~ 02
33. [Auto Configuration]	j	u	01
34. [Failover Input Switch]	k	z	00 ~ 01
35. [Main Input]	k	v	00 ~ 02
36. [Failover Input]	k	w	00 ~ 02

Transmission/Reception Protocol

Transmission

(Command1)(Command2)( )(Set ID)( )(Data)(Cr)

(Command 1): j, k, m, x, d

(Command 2): This command is used to control the monitor.

(Set ID): Used to identify the monitor being controlled. (Set ID) can be assigned to each monitor under [General] in the Settings Menu.
A value from 1 to 10 can be assigned. By selecting '0' for the (Set ID) value in the protocol format, you can control all connected monitors.
* The value is displayed as base 10 on the OSD menu and used as base 16 (0x00 - 0x63) in the transmission/reception protocol for remote control.

(Data): Transmits a setting value (Data) required for the command described previously. (base 16)
When the Data 'FF' is sent, the setting value corresponding to the specific command is read (Data read mode).

(Cr): Carriage return, which is '0x0D' in ASCII code.

( ): Space, which is '0x20' in ASCII code.

OK Acknowledgment

(Command2)( )(Set ID)( )(OK)(Data)(x)

When the Data has been successfully received, the monitor sends an ACK response signal in the above format. The Data showing the current state is received in the Data read mode. The Data from the PC is simply returned in the Data write mode.

Error Acknowledgment

(Command2)( )(Set ID)( )(NG)(Data)(x)

When the set receives an abnormal piece of Data for an unsupported function or there is a communication error, it returns ACK in the format above.

Data 00: Illegal code

Actual Data Structure (Base 16 → Base 10)

- See the table below when inserting a base-16 value in (Data).
- The channel setup command (ma) uses a 2-byte base-16 value (Data) for channel number input.

00: Step 0	32: Step 50 (Set ID 50)	FE: Step 254
01: Step 1 (Set ID 1)	33: Step 51 (Set ID 51)	FF: Step 255
...	...	...
0A: Step 10 (Set ID 10)	63: Step 99 (Set ID 99)	01 00: Step 256
...	...	...
0F: Step 15 (Set ID 15)	C7: Step 199	27 0E: Step 9998
10: Step 16 (Set ID 16)	C8: Step 200	27 0F: Step 9999
...	...	...

* Commands may work differently depending on the model and signal.

01. Power (Command: k a)

► Controls the On/Off of the power supply to the monitor.

Transmission (k)(a)( )(Set ID)( )(Data)(Cr)

Data

00: Power Off 01: Power On

Ack (a)( )(Set ID)( )(OK/NG)(Data)(x)

02. Screen Mute (Command: k d)

► Controls the On/Off of the screen of the monitor.

Transmission (k)(d)( )(Set ID)( )(Data)(Cr)

Data

00: Off 01: On

Ack (d)( )(Set ID)( )(OK/NG)(Data)(x)

03. Input select (Main) (Command: k b)

► Controls the input mode of the Main.

Transmission (k)(b)( )(Set ID)( )(Data)(Cr)

Data

00: D-SUB 01: SDI

02: DVI-D 03: HDMI

04: Component

Ack (b)( )(Set ID)( )(OK/NG)(Data)(x)

04. Input select (Sub) (Command: k y)

► Controls the input mode of the Sub.

Transmission (k)(y)( )(Set ID)( )(Data)(Cr)

Data

00: D-SUB 01: SDI

02: DVI-D 03: HDMI

04: Component

Ack (y)( )(Set ID)( )(OK/NG)(Data)(x)

05. [Aspect Ratio] (Main) (Command: k c)

► Adjusts the Aspect Ratio of the Main.

Transmission (k)(c)( )(Set ID)( )(Data)(Cr)

Data

00: [Full Wide] 01: [Original]

02: [Just Scan]

Ack (c)( )(Set ID)( )(OK/NG)(Data)(x)

06. [Aspect Ratio] (Sub) (Command: k o)

► Adjusts the Aspect Ratio of the Sub.

Transmission (k)(o)( )(Set ID)( )(Data)(Cr)

Data

00: [Full Wide]

01: [Original]

Ack (o)( )(Set ID)( )(OK/NG)(Data)(x)

07. [PBP / PIP] (Command: k n)

► Controls the PBP / PIP mode.

Transmission (k)(n)( )(Set ID)( )(Data)(Cr)

Data

00: Off

01: PBP

02: PIP_LT

03: PIP_RT

04: PIP_LB

05: PIP_RB

Ack (n)( )(Set ID)( )(OK/NG)(Data)(x)

08. [PIP Size] (Command: k p)

► Adjusts the size of PIP.

Transmission (k)(p)( )(Set ID)( )(Data)(Cr)

Data

00: [Small]

01: [Medium]

02: [Large]

Ack (p)( )(Set ID)( )(OK/NG)(Data)(x)

09. [Main/Sub Screen Change] (Command: m a)

► Controls the Swap in the PBP mode.

Transmission (m)(a)( )(Set ID)( )(Data)(Cr)

Data

01: [Main/Sub Screen Change]

Ack (a)( )(Set ID)( )(OK/NG)(Data)(x)

10. [Picture Mode] (Command: d x)

► Controls the Picture Mode.

Transmission (d)(x)( )(Set ID)( )(Data)(Cr)

Data

00: [Custom]

01: [Mono]

02: [sRGB]

03: [EBU]

04: [REC709]

05: [SMPTE-C]

06: [DICOM]

07: [Calibration 1]

08: [Calibration 2]

Ack (x)( )(Set ID)( )(OK/NG)(Data)(x)

11. [Brightness] (Command: k h)

► Adjusts screen brightness.

Transmission (k)(h)( )(Set ID)( )(Data)(Cr)

Data

Min: 00 - Max: 64

Ack (h)( )(Set ID)( )(OK/NG)(Data)(x)

12. [Contrast] (Command: k g)

► Adjusts the color contrast of the screen.

Transmission (k)(g)( )(Set ID)( )(Data)(Cr)

Data

Min: 00 - Max: 64

Ack (g)( )(Set ID)( )(OK/NG)(Data)(x)

13. [Sharpness] (Command: k k)

► Adjusts the sharpness of the screen.

Transmission (k)(k)( )(Set ID)( )(Data)(Cr)

Data

Min: 00 - Max: 64

Ack (k)( )(Set ID)( )(OK/NG)(Data)(x)

14. [Brightness Stabilization] (Command: m b)

► Controls the Brightness Stabilization function.

Transmission (m)(b)( )(Set ID)( )(Data)(Cr)

Data

00: [On] 01: [Off]

Ack (b)( )(Set ID)( )(OK/NG)(Data)(x)

15. [SUPER RESOLUTION+] (Command: m c)

► Controls the SUPER RESOLUTION+ function.

Transmission (m)(c)( )(Set ID)( )(Data)(Cr)

Data

00: [High] 01: [Middle]

02: [Low] 03: [Off]

Ack (c)( )(Set ID)( )(OK/NG)(Data)(x)

16. [Black Level] (Command: m d)

► Controls the Offset level. (HDMI only)

Transmission (m)(d)( )(Set ID)( )(Data)(Cr)

Data

00: [High] 01: [Low]

Ack (d)( )(Set ID)( )(OK/NG)(Data)(x)

17. [DFC] (Command: m f)

► Controls the DFC function.

Transmission (m)(f)( )(Set ID)( )(Data)(Cr)

Data

00: [On] 01: [Off]

Ack (f)( )(Set ID)( )(OK/NG)(Data)(x)

18. [Response Time] (Command: m g)

► Controls the Response Time.

Transmission (m)(g)( )(Set ID)( )(Data)(Cr)

Data

00: [Faster] 01: [Fast]

02: [Normal] 03: [Off]

Ack (g)( )(Set ID)( )(OK/NG)(Data)(x)

19. [Black Stabilizer] (Command: m h)

► Controls the Black Sharpness Optimization function.

Transmission (m)(h)( )(Set ID)( )(Data)(Cr)

Data

Min: 00 - Max: 64

Ack (h)( )(Set ID)( )(OK/NG)(Data)(x)

20. [Uniformity] (Command: m i)

► Controls the Uniformity function.

Transmission (m)(i)( )(Set ID)( )(Data)(Cr)

Data

00: [On] 01: [Off]

Ack (i)( )(Set ID)( )(OK/NG)(Data)(x)

21. [Gamma] (Command: m j)

► Adjusts the Gamma settings.

Transmission (m)(j)( )(Set ID)( )(Data)(Cr)

Data

00: [Gamma 1.8] 01: [Gamma 2.0]

02: [Gamma 2.2] 03: [Gamma 2.4]

04: [Gamma 2.6] 05: [DICOM Gamma Curve]

Ack (j)( )(Set ID)( )(OK/NG)(Data)(x)

22. [Color Temp] (Command: k u)

► Adjusts the color Temp.

Transmission (k)(u)( )(Set ID)( )(Data)(Cr)

Data

00: [Custom] 01: [6500K]

02: [7500K] 03: [9300K]

04: [Manual]

Ack (u)( )(Set ID)( )(OK/NG)(Data)(x)

23. [Red] (Command: j w)

► Adjusts the red.

Transmission (j)(w)( )(Set ID)( )(Data)(Cr)

Data

Min: 00 - Max: 64

Ack (w)( )(Set ID)( )(OK/NG)(Data)(x)

24. [Green] (Command: j y)

► Adjusts the green.

Transmission (j)(y)( )(Set ID)( )(Data)(Cr)

Data

Min: 00 - Max: 64

Ack (y)( )(Set ID)( )(OK/NG)(Data)(x)

25. [Blue] (Command: j z)

► Adjusts the blue.

Transmission (j)(z)( )(Set ID)( )(Data)(Cr)

Data

Min: 00 - Max: 64

Ack (z)( )(Set ID)( )(OK/NG)(Data)(x)

26. [Language] (Command: f i)

► Adjusts the language of the Menu screen.

Transmission (f)(i)( )(Set ID)( )(Data)(Cr)

00 - 10: English - Korean (17 languages)

Ack (i)( )(Set ID)( )(OK/NG)(Data)(x)

27. [SMART ENERGY SAVING] (Command: m k)

► Adjusts the SMART ENERGY SAVING.

Transmission (m)(k)( )(Set ID)( )(Data)(Cr)

Data

00: [High] 01: [Low]

02: [Off]

Ack (k)( )(Set ID)( )(OK/NG)(Data)(x)

28. [LED Control Button] (Command: m l)

► Adjusts the LED ON time of the Control Button.

Transmission (m)(l)( )(Set ID)( )(Data)(Cr)

Data

00: [Always On] 01: [20Sec Time Out]

02: [10Sec Time Out] 03: [5Sec Time Out]

Ack (l)( )(Set ID)( )(OK/NG)(Data)(x)

29. [DVI Power Supply] (Command: m m)

► Controls the DVI Power Supply function.

Transmission (m)(m)( )(Set ID)( )(Data)(Cr)

Data

00: [On] 01: [Off]

Ack (m)( )(Set ID)( )(OK/NG)(Data)(x)

30. [Auto Screen Off] (Command: m n)

► Adjusts the time to automatically turn the screen off when there is no monitor signal for a set period of time.

Transmission (m)(n)( )(Set ID)( )(Data)(Cr)

Data

00: [On]

01: [Off]

Ack (n)( )(Set ID)( )(OK/NG)(Data)(x)

31. [OSD Lock] (Command: k m)

► Controls the OSD Lock function.

Transmission (k)(m)( )(Set ID)( )(Data)(Cr)

Data

00: [Off]

01: [On]

Ack (m)( )(Set ID)( )(OK/NG)(Data)(x)

32. [Reset] (Command: f k)

► Controls the Reset operation.

Transmission (f)(k)( )(Set ID)( )(Data)(Cr)

Data

00: [Picture Reset]

01: Factory Reset

02: [User Preset Reset]

Ack (k)( )(Set ID)( )(OK/NG)(Data)(x)

33. [Auto Configuration] (Command: j u)

► Performs the Auto Configuration.

Transmission (j)(u)( )(Set ID)( )(Data)(Cr)

Data

01: [Auto Configuration]

Ack (u)( )(Set ID)( )(OK/NG)(Data)(x)

34. [Failover Input Switch] (Command: k z)

► Controls the Failover Input Switch function.

Transmission (k)(z)( )(Set ID)( )(Data)(Cr)

Data

00: [Off] 01: [On]

Ack (z)( )(Set ID)( )(OK/NG)(Data)(x)

35. [Main Input] (Command: k v)

► Controls the input of the Failover Main.

Transmission (k)(v)( )(Set ID)( )(Data)(Cr)

Data

00: SDI 01: DVI-D

02: HDMI

Ack (v)( )(Set ID)( )(OK/NG)(Data)(x)

36. [Failover Input] (Command: k w)

► Controls the input of the Failover.

Transmission (k)(w)( )(Set ID)( )(Data)(Cr)

Data

00: SDI 01: DVI-D

02: HDMI

Ack (w)( )(Set ID)( )(OK/NG)(Data)(x)

LIMITED WARRANTY (USA)

THE PRODUCT'S FULL LIMITED WARRANTY TERMS AND CONDITIONS ARE AVAILABLE AT *https://www.lg.com/us* AND/OR YOUR WARRANTY.

ARBITRATION NOTICE: THIS LIMITED WARRANTY CONTAINS AN ARBITRATION PROVISION THAT REQUIRES YOU AND LG ELECTRONICS ("LG") TO RESOLVE DISPUTES BY BINDING ARBITRATION INSTEAD OF IN COURT, UNLESS YOU CHOOSE TO OPT OUT. IN ARBITRATION, CLASS ACTIONS AND JURY TRIALS ARE NOT PERMITTED. PLEASE SEE THE SECTION TITLED "PROCEDURE FOR RESOLVING DISPUTES" BELOW.

PROCEDURE FOR RESOLVING DISPUTES:

ALL DISPUTES BETWEEN YOU AND LG ARISING OUT OF OR RELATING IN ANY WAY TO THIS LIMITED WARRANTY OR THE PRODUCT SHALL BE RESOLVED EXCLUSIVELY THROUGH BINDING ARBITRATION, AND NOT IN A COURT OF GENERAL JURISDICTION. BINDING ARBITRATION MEANS THAT YOU AND LG ARE EACH WAIVING THE RIGHT TO A JURY TRIAL AND TO BRING OR PARTICIPATE IN A CLASS ACTION.

Definitions. For the purposes of this section, references to "LG" mean LG Electronics U.S.A., Inc., its parents, subsidiaries and affiliates, and each of their officers, directors, employees, agents, beneficiaries, predecessors in interest, successors, assigns and suppliers; references to "dispute" or "claim" shall include any dispute, claim or controversy of any kind whatsoever (whether based in contract, tort, statute, regulation, ordinance, fraud, misrepresentation or any other legal or equitable theory) arising out of or relating in any way to the sale, condition or performance of the product or this Limited Warranty.

Notice of Dispute. In the event you intend to commence an arbitration proceeding, you must first notify LG in writing at least 30 days in advance of initiating the arbitration by sending a letter to LG at LG Electronics, USA, Inc. Attn: Legal Department- Arbitration 111 Sylvan Avenue, Englewood Cliffs, NJ 07632. You and LG agree to engage in good faith discussions in an attempt to amicably resolve your claim. The notice must provide your name, address, and telephone number; identify the product that is the subject of the claim; and describe the nature of the claim and the relief being sought. If you and LG are unable to resolve the dispute within 30 days, either party may proceed to file a claim for arbitration.

Agreement to Binding Arbitration and Class Action Waiver. Upon failure to resolve the dispute during the 30 day period after sending written notice to LG, you and LG agree to resolve any claims between us only by binding arbitration on an individual basis, unless you opt out as provided below. Any dispute between you and LG shall not be combined or consolidated with a dispute involving any other person's or entity's product or claim. More specifically, without limitation of the foregoing, any dispute between you and LG shall not under any circumstances proceed as part of a class or representative action. Instead of arbitration, either party may bring an individual action in small claims court, but that small claims court action may not be brought on a class or representative basis.

Arbitration Rules and Procedures. To begin arbitration of a claim, either you or LG must make a written demand for arbitration. The arbitration will be administered by the American Arbitration Association ("AAA") and will be conducted before a single arbitrator under the AAA's Consumer Arbitration Rules that are in effect at the time the arbitration is initiated (referred to as the "AAA Rules") and under the procedures set forth in this section. The AAA Rules are available online at *www.adr.org/consumer*. Send a copy of your written demand for arbitration, as well as a copy of this provision, to the AAA in the manner described in the AAA Rules. You must also send a copy of your written demand to LG at LG Electronics, USA, Inc. Attn: Legal Department- Arbitration 111 Sylvan Avenue, Englewood Cliffs, NJ 07632. If there is a conflict between the AAA Rules and the rules set forth in this section, the rules set forth in this section will govern. This arbitration provision is governed by the Federal Arbitration Act. Judgment may be entered on the arbitrator's award in any court of competent jurisdiction. All issues are for the arbitrator to decide, except that issues relating to the scope and enforceability of the arbitration provision and to the arbitrability of the dispute are for the court to decide. The arbitrator is bound by the terms of this provision.

Governing Law. The law of the state of your residence shall govern this Limited Warranty and any disputes between us except to the extent that such law is preempted by or inconsistent with applicable federal law.

Fees/Costs. You do not need to pay any fee to begin an arbitration. Upon receipt of your written demand for arbitration, LG will promptly pay all arbitration filing fees to the AAA unless you seek more than $25,000 in damages, in which case the payment of these fees will be governed by the AAA Rules. Except as otherwise provided for herein, LG will pay all AAA filing, administration and arbitrator fees for any arbitration initiated in accordance with the AAA Rules and this arbitration provision. If you prevail in the arbitration, LG will pay your attorneys' fees and expenses as long as they are reasonable, by considering factors including, but not limited to, the purchase amount and claim amount. Notwithstanding the foregoing, if applicable law allows for an award of reasonable attorneys' fees and expenses, an arbitrator can award them to the same extent that a court would. If the arbitrator finds either the substance of your claim or the relief sought in the demand is frivolous or brought for an improper purpose (as measured by the standards set forth in Federal Rule of Civil Procedure 11(b)), then the payment of all arbitration fees will be governed by the AAA Rules. In such a situation, you agree to reimburse LG for all monies previously disbursed by it that are otherwise your obligation to pay under the AAA Rules. Except as otherwise provided for, LG waives any rights it may have to seek attorneys' fees and expenses from you if LG prevails in the arbitration.

Hearings and Location. If your claim is for $25,000 or less, you may choose to have the arbitration conducted solely on the basis of (1) documents submitted to the arbitrator, (2) through a telephonic hearing, or (3) by an in-person hearing as established by the AAA Rules. If your claim exceeds $25,000, the right to a hearing will be determined by the AAA Rules. Any in-person arbitration hearings will be held at a location within the federal judicial district in which you reside unless we both agree to another location or we agree to a telephonic arbitration.

Opt Out. You may opt out of this dispute resolution procedure. If you opt out, neither you nor LG can require the other to participate in an arbitration proceeding. To opt out, you must send notice to LG no later than 30 calendar days from the date of the first consumer purchaser's purchase of the product by either: (i) sending an e-mail to optout@lge.com, with the subject line: "Arbitration Opt Out" or (ii) calling 1- 800-980-2973. You must include in the opt out e-mail or provide by telephone: (a) your name and address; (b) the date on which the product was purchased; (c) the product model name or model number; and (d) the serial number (the serial number can be found (i) on the product; or (ii) online by accessing *https://www.lg.com/us/support* and clicking on "How do I find my model number?").

You may only opt out of the dispute resolution procedure in the manner described above (that is, by e-mail or telephone); no other form of notice will be effective to opt out of this dispute resolution procedure.

Opting out of this dispute resolution procedure will not affect the coverage of the Limited Warranty in any way, and you will continue to enjoy the full benefits of the Limited Warranty. If you keep this product and do not opt out, then you accept all terms and conditions of the arbitration provision described above.

LIMITED WARRANTY (CANADA)

THE PRODUCT'S FULL LIMITED WARRANTY TERMS AND CONDITIONS ARE AVAILABLE AT *https://www.lg.com/ca_en/* AND/OR YOUR WARRANTY.

ARBITRATION NOTICE: THIS LIMITED WARRANTY CONTAINS AN ARBITRATION PROVISION THAT REQUIRES YOU AND LG TO RESOLVE DISPUTES BY BINDING ARBITRATION INSTEAD OF IN COURT, UNLESS THE LAWS OF YOUR PROVINCE OR TERRITORY DO NOT PERMIT THAT, OR, IN OTHER JURISDICTIONS, IF YOU CHOOSE TO OPT OUT. FOR FURTHER CLARITY, THIS ARBITRATION PROVISION IS NOT APPLICABLE TO CONSUMERS RESIDING IN ONTARIO, BRITISH COLUMBIA OR QUÉBEC. IN ARBITRATION, CLASS ACTIONS AND JURY TRIALS ARE NOT PERMITTED. PLEASE SEE THE SECTION TITLED "PROCEDURE FOR RESOLVING DISPUTES" BELOW.

- **DISCLAIMER:**
  IF YOU ARE A CONSUMER SUBJECT TO QUÉBEC, BRITISH COLUMBIA OR ONTARIO'S CONSUMER PROTECTION LEGISLATION, THE EXCLUSION OF WARRANTIES CONTAINED IN THIS SECTION DO NOT EXCLUDE OR LIMIT THE RIGHTS AND REMEDIES THAT YOU MAY HAVE UNDER SUCH ACT, INCLUDING THE RIGHT TO MAKE A CLAIM UNDER ANY OF THE STATUTORY WARRANTIES PROVIDED THEREUNDER.

PROCEDURE FOR RESOLVING DISPUTES:

EXCEPT WHERE PROHIBITED AT LAW (INCLUDING WITH RESPECT TO QUÉBEC, BRITISH COLUMBIA AND ONTARIO CONSUMERS), ALL DISPUTES BETWEEN YOU AND LG ARISING OUT OF OR RELATING IN ANY WAY TO THIS LIMITED WARRANTY OR THE PRODUCT SHALL BE RESOLVED EXCLUSIVELY THROUGH BINDING ARBITRATION, AND NOT IN A COURT OF GENERAL JURISDICTION. EXCEPT WHERE PROHIBITED AT LAW (INCLUDING WITH RESPECT TO QUÉBEC, BRITISH COLUMBIA AND ONTARIO CONSUMERS), YOU AND LG BOTH IRREVOCABLY AGREE TO WAIVE THE RIGHT TO A JURY TRIAL AND TO BRING OR PARTICIPATE IN A CLASS ACTION.

Definitions. For the purposes of this section, references to "LG" mean LG Electronics Canada, Inc., its parents, subsidiaries and affiliates, and each of their officers, directors, employees, agents, beneficiaries, predecessors in interest, successors, assigns and suppliers; references to "dispute" or "claim" shall include any dispute, claim or controversy of any kind whatsoever (whether based in contract, tort, statute, regulation, ordinance, fraud, misrepresentation or any other legal or equitable theory) arising out of or relating in any way to the sale, condition or performance of the product or this Limited Warranty.

Notice of Dispute. In the event you intend to commence an arbitration proceeding, you must first notify LG in writing at least 30 days in advance of initiating the arbitration by sending a letter to LGECI Legal Team at 20 Norelco Drive, North York, Ontario, Canada M9L 2X6 (the "Notice of Dispute"). You and LG agree to engage in good faith discussions in an attempt to amicably resolve your claim. The notice must provide your name, address, and telephone number; identify the product that is the subject of the claim; and describe the nature of the claim and the relief being sought. If you and LG are unable to resolve the dispute within 30 days of LG's receipt of the Notice of Dispute, the dispute shall be resolved by binding arbitration in accordance with the procedure set out herein. You and LG both agree that, during the arbitration proceeding, the terms (including any amount) of any settlement offer made by either you or LG will not be disclosed to the arbitrator until the arbitrator determines the dispute.

Agreement to Binding Arbitration and Class Action Waiver. Upon failure to resolve the dispute during the 30 day period after LG's receipt of the Notice of Dispute, you and LG agree to resolve any claims between you and LG only by binding arbitration on an individual basis, unless you opt out as provided below, or you reside in a jurisdiction that prevents full application of this clause in the circumstances of the claims at issue (in which case if you are a consumer, this clause will only apply if you expressly agree to the arbitration). To the extent permitted by applicable law, any dispute between you and LG shall not be combined or consolidated with a dispute involving any other person's or entity's product or claim. More specifically, without limitation of the foregoing, except to the extent such a prohibition is not permitted at law, any dispute between you and LG shall not under any circumstances proceed as part of a class or representative action. Instead of arbitration, either party may bring an individual action in small claims court, but that small claims court action may not be brought on a class or representative basis except to the extent this prohibition is not permitted at law in your province or territory of jurisdiction as it relates to the claims at issue between you and LG. This does not apply to consumers in Ontario, British Columbia and Québec. In accordance with provincial legislation, the consumer and LG may agree to resolve the dispute using any procedure available, including commencing the action before the competent courts of those provinces.

Arbitration Rules and Procedures. To begin arbitration of a claim, either you or LG must make a written demand for arbitration. The arbitration will be private and confidential, and conducted on a simplified and expedited basis before a single arbitrator chosen by the parties under the provincial or territorial commercial arbitration law and rules of the province or territory of your residence. You must also send a copy of your written demand to LG at LG Electronics, Canada, Inc., Attn: Legal Department- Arbitration, 20 Norelco Drive, North York, Ontario M9L 2X6. This arbitration provision is governed by your applicable provincial or territorial commercial arbitration legislation. For consumers in Ontario, British Columbia and Québec, the applicable arbitration legislation only applies if consumers agree to submit the dispute to arbitration. Judgment may be entered on the arbitrator's award in any court of competent jurisdiction. All issues are for the arbitrator to decide, except that, issues relating to the scope and enforceability of the arbitration provision and to the arbitrability of the dispute are for the court to decide. The arbitrator is bound by the terms of this provision.

Governing Law. The law of the province or territory of your purchase shall govern this Limited Warranty and any disputes between you and LG except to the extent that such law is preempted by or inconsistent with applicable federal or provincial/territorial law. Should arbitration not be permitted for any claim, action, dispute or controversy between you and LG, you and LG attorn to the exclusive jurisdiction of the courts of the province or territory of your purchase for the resolution of the claim, action, dispute or controversy between you and LG.

Fees/Costs. You do not need to pay any fee to begin an arbitration. Upon receipt of your written demand for arbitration, LG will promptly pay all arbitration filing fees unless you seek more than $25,000 in damages, in which case the payment of these fees will be governed by the applicable arbitration rules. Except as otherwise provided for herein, LG will pay all filing, administration and arbitrator fees for any arbitration initiated in accordance with the applicable arbitration rules and this arbitration provision. If you prevail in the arbitration, LG will pay your attorneys' fees and expenses as long as they are reasonable, by considering factors including, but not limited to, the purchase amount and claim amount. Notwithstanding the foregoing, if applicable law allows for an award of reasonable attorneys' fees and expenses, an arbitrator can award them to the same extent that a court would. If the arbitrator finds either the substance of your claim or the relief sought in the demand is frivolous or brought for an improper purpose (as measured by the applicable laws), then the payment of all arbitration fees will be governed by the applicable arbitration rules. In such a situation, you agree to reimburse LG for all monies previously disbursed by it that are otherwise your obligation to pay under the applicable arbitration rules. Except as otherwise provided for, LG waives any rights it may have to seek attorneys' fees and expenses from you if LG prevails in the arbitration.

Hearings and Location. If your claim is for $25,000 or less, you may choose to have the arbitration conducted solely (1) on the basis of documents submitted to the arbitrator, (2) through a telephonic hearing, or (3) by an in-person hearing as established by the applicable arbitration rules. If your claim exceeds $25,000, the right to a hearing will be determined by the applicable arbitration rules. Any in-person arbitration hearings will be held at the nearest, most mutually-convenient arbitration location available within the province or territory in which you reside unless you and LG both agree to another location or agree to a telephonic arbitration.

Severability and Waiver. If any portion of this Limited Warranty (including these arbitration procedures) is unenforceable, the remaining provisions will continue in full force and effect to the maximum extent permitted by applicable law. Should LG fail to enforce strict performance of any provision of this Limited Warranty (including these arbitration procedures), it does not mean that LG intends to waive or has waived any provision or part of this Limited Warranty.

Opt Out. The arbitration provision requires you and LG to resolve disputes by binding arbitration instead of court, unless the laws of your province or territory do not permit that, or, in other jurisdictions, if you choose to opt out. The arbitration provision does not apply to consumers in Ontario, British Columbia and Québec.

For individuals that fall within the binding arbitration provisions, you may opt out of this dispute resolution procedure. If you opt out, neither you nor LG can require the other to participate in an arbitration proceeding. To opt out, you must send notice to LG no later than 30 calendar days from the date of the first consumer purchaser's purchase of the product by either (i) sending an e-mail to optout@lge.com, with the subject line: "Arbitration Opt Out;" or (ii) calling 1-800-980-2973. You must include in the opt out e-mail or provide by telephone: (a) your name and address; (b) the date on which the product was purchased; (c) the product model name or model number; and (d) the serial number (the serial number can be found (i) on the product; or (ii) online by accessing *https://www.lg.com/ca_en/findmodel_serial/*).

In the event that you "Opt Out", the law of the province or territory of your residence shall govern this Limited Warranty and any disputes between you and LG except to the extent that such law is preempted by or inconsistent with applicable federal or provincial/territorial law. Should arbitration not be permitted for any claim, action, dispute or controversy between you and LG, you and LG agree to attorn to the exclusive jurisdiction of the courts of the province or territory of your residence for the resolution of the claim, action, dispute or controversy between you and LG.

You may only opt out of the dispute resolution procedure in the manner described above (that is, by e-mail or telephone); no other form of notice will be effective to opt out of this dispute resolution procedure. Opting out of this dispute resolution procedure will not affect the coverage of the Limited Warranty in any way, and you will continue to enjoy the full benefits of the Limited Warranty. If you keep this product and do not opt out, then you accept all terms and conditions of the arbitration provision described above.

Conflict of Terms. In the event of a conflict or inconsistency between the terms of this Limited Warranty and the End User License Agreement ("EULA") in regards to dispute resolution, the terms of this Limited Warranty shall control and govern the rights and obligations of the parties and shall take precedence over the EULA.

WARNING: This equipment is compliant with Class A of CISPR 32. In a residential environment this equipment may cause radio interference.

The model and serial number of the product are located on the back and on one side of the product. Record them below in case you ever need service.

MODEL

SERIAL NO.

Supplier's Declaration of Conformity

Trade Name	LG
Responsible Party	LG Electronics USA, Inc.
Address	111 Sylvan Avenue, North Building, Englewood Cliffs, NJ 07632
E-mail	lg.environmental@lge.com