LG
Life's Good

ENGLISH Easy Setup Guide
Please read this manual carefully before operating your set and retain it for future reference.

ESPAÑOL Guía Rápida de Configuración
Lea atentamente este manual antes de poner en marcha el equipo y consérvelo para futuras consultas.

FRANÇAIS Guide de configuration rapide
Avant d'utiliser l'appareil, veuillez lire attentivement ce manuel et le conserver pour pouvoir vous y reporter ultérieurement.

LED TV

40LX770H
43LX770H
49LX770H
55LX770H
65LX770H

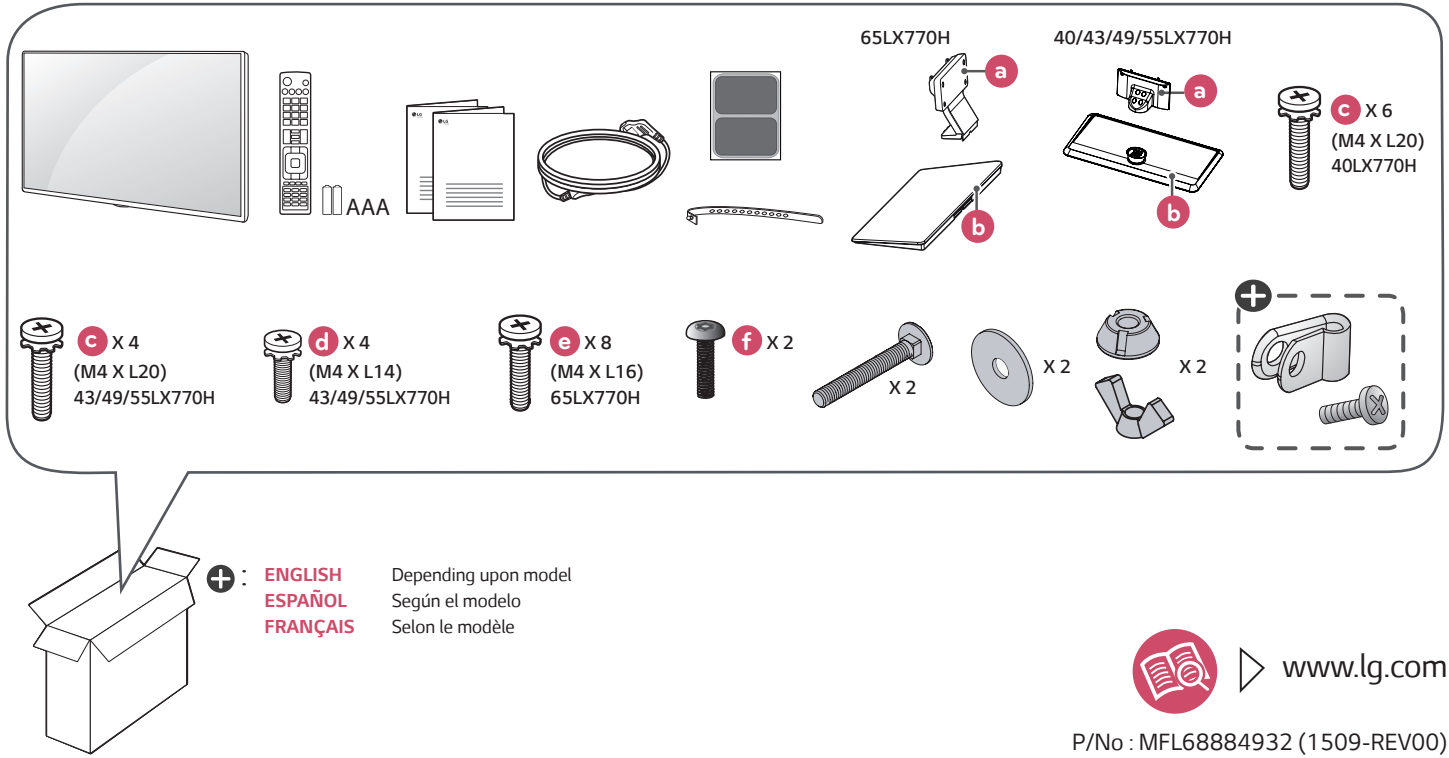

⊕ :
ENGLISH Depending upon model
ESPAÑOL Según el modelo
FRANÇAIS Selon le modèle

www.lg.com

P/No : MFL68884932 (1509-REV00)

ENGLISH Read **Safety and Reference**.
ESPAÑOL Leer **Seguridad y Consultas**.
FRANÇAIS Lisez **Sécurité et références**.

1

40/43/49/55LX770H



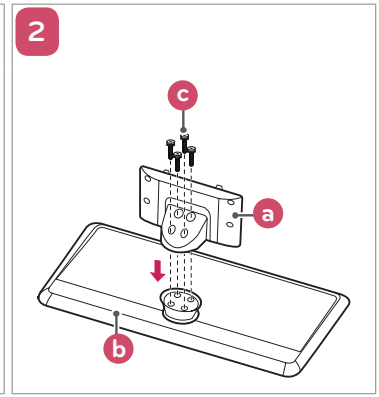

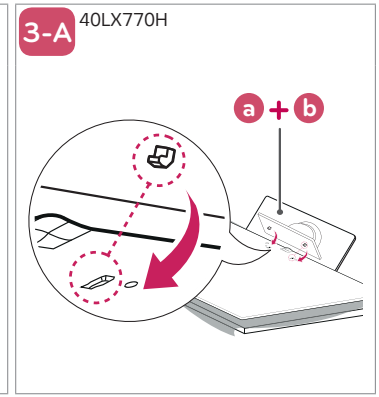

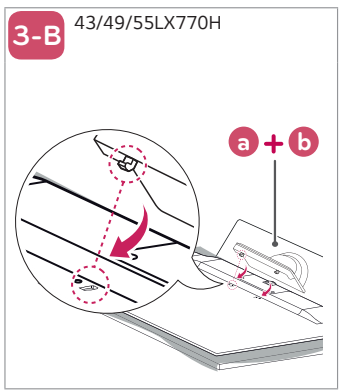

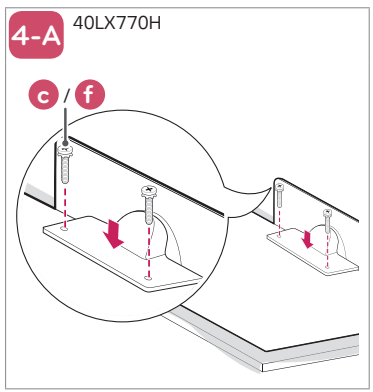

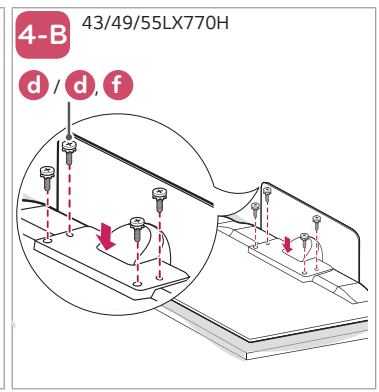

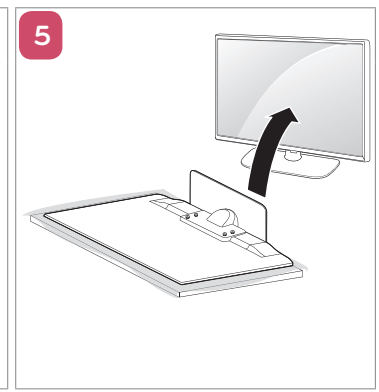

65LX770H

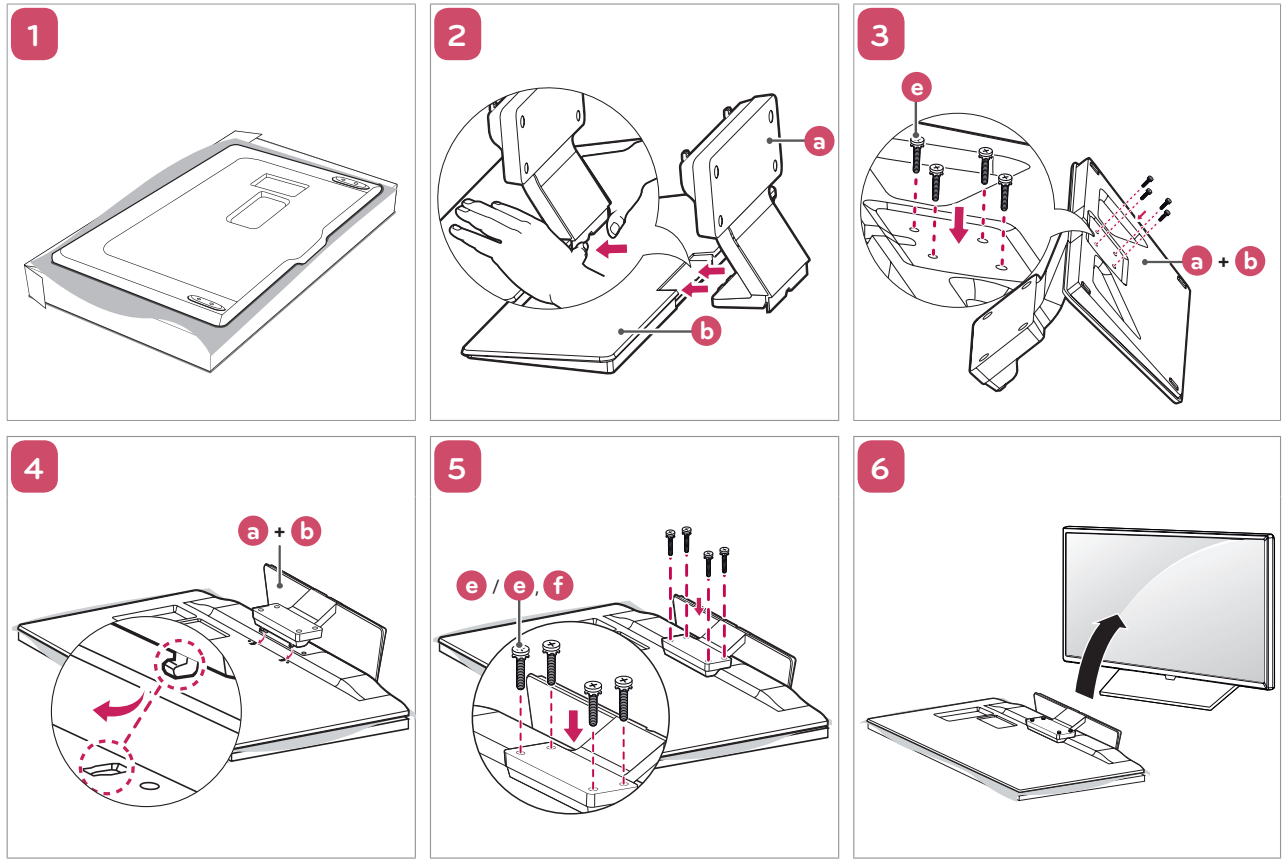

2

ENGLISH
ESPAÑOL
FRANÇAIS

Image shown may differ from your TV.
La imagen puede ser diferente a la de su televisor.
Cette illustration peut ne pas correspondre à votre téléviseur.

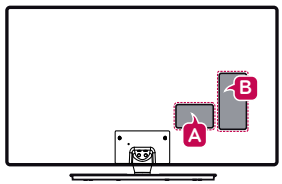

A-1

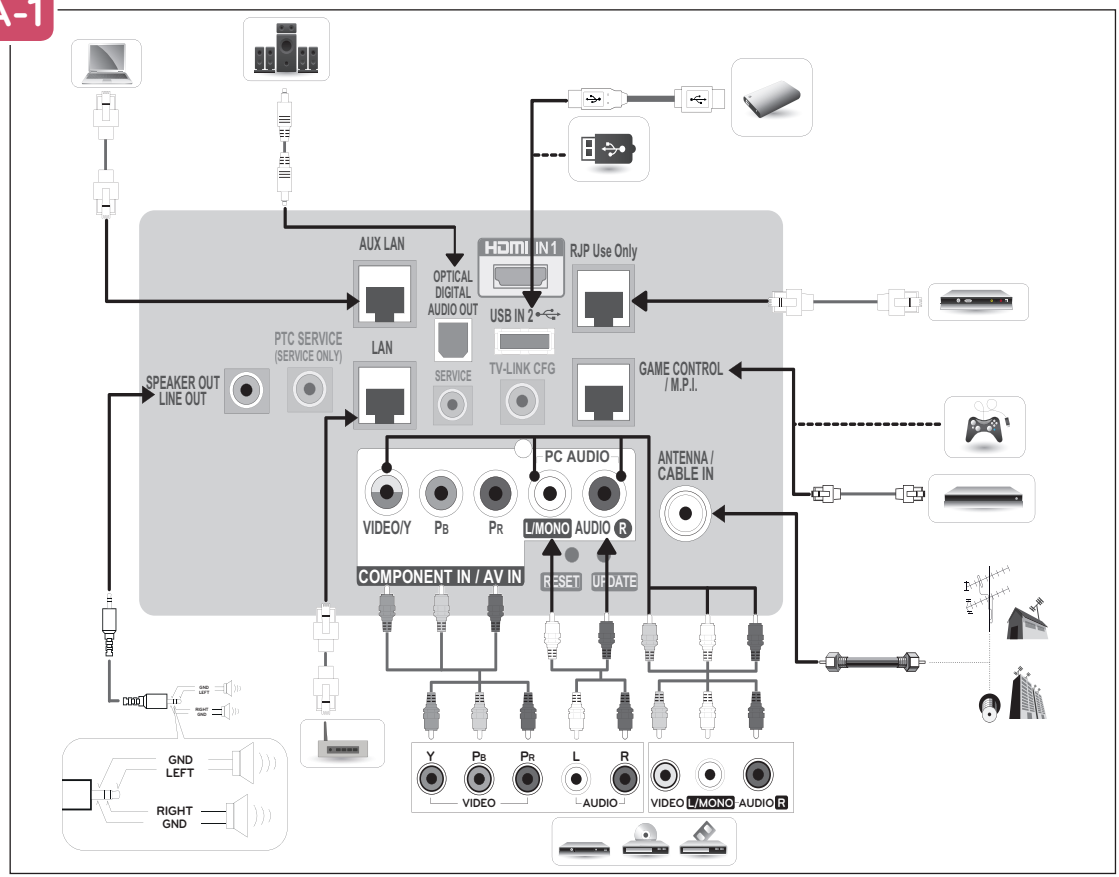

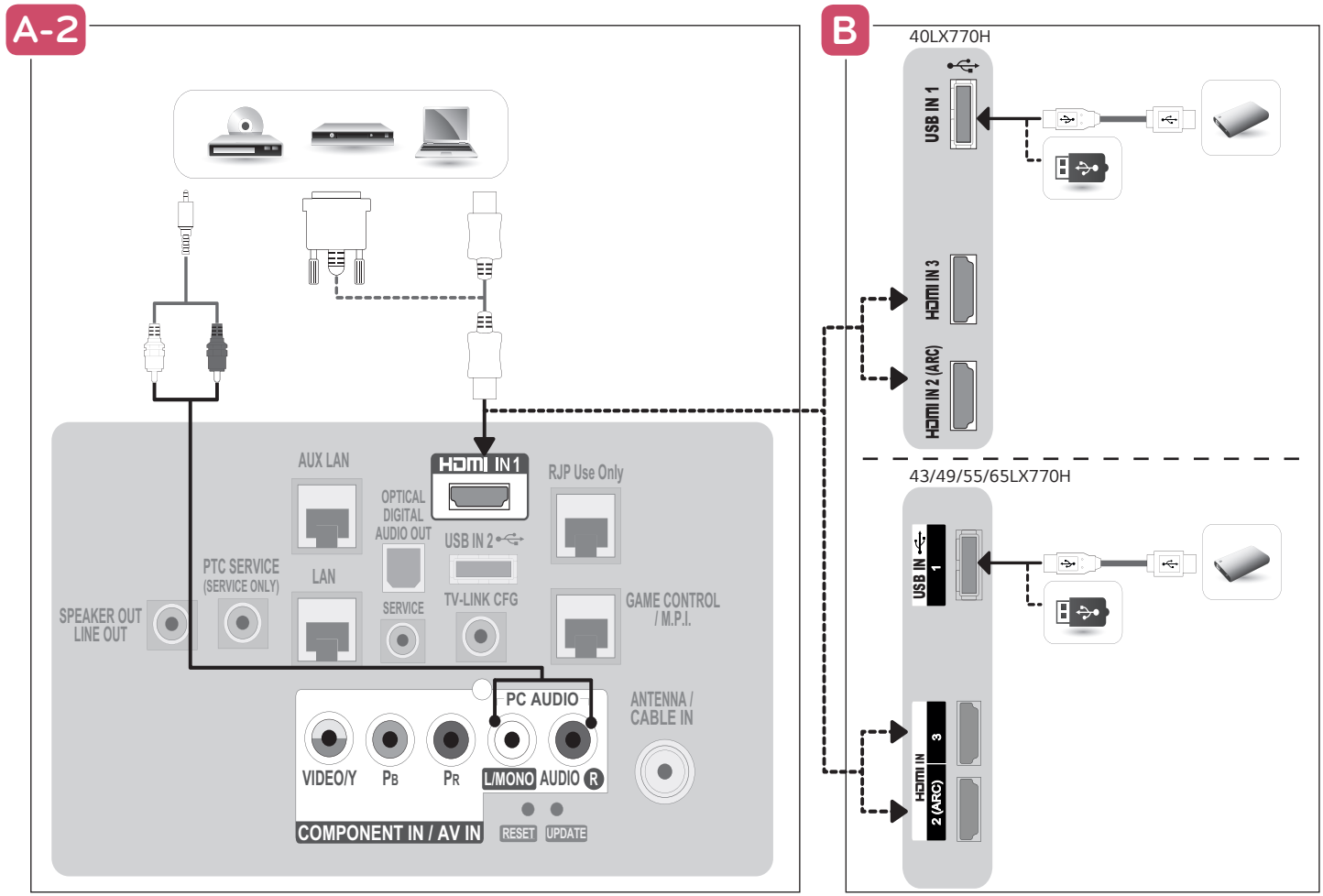
A-2
B
40LX770H
USB IN 1
HDMI IN 3
HDMI IN 2 (ARC)
43/49/55/65LX770H
USB IN 1
HDMI IN 3
2 (ARC)
AUX LAN
HDMI IN 1
RJP Use Only
OPTICAL DIGITAL AUDIO OUT
USB IN 2
PTC SERVICE (SERVICE ONLY)
LAN
SERVICE
TV-LINK CFG
GAME CONTROL / M.P.I.
SPEAKER OUT LINE OUT
PC AUDIO
ANTENNA / CABLE IN
VIDEO/Y
PB
PR
L/MONO
AUDIO R
COMPONENT IN / AV IN
RESET
UPDATE

3

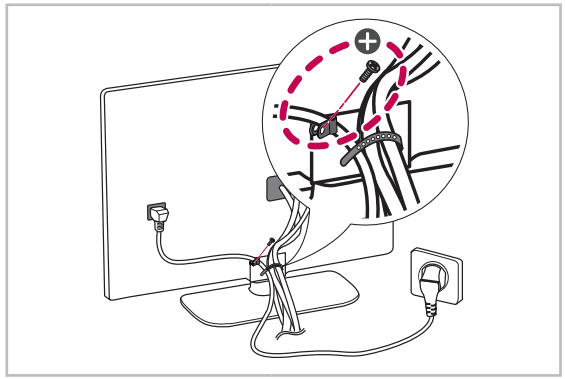

⊕ :

ENGLISH	Depending upon model
ESPAÑOL	Según el modelo
FRANÇAIS	Selon le modèle

4

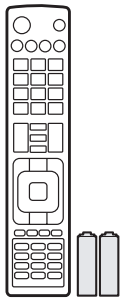

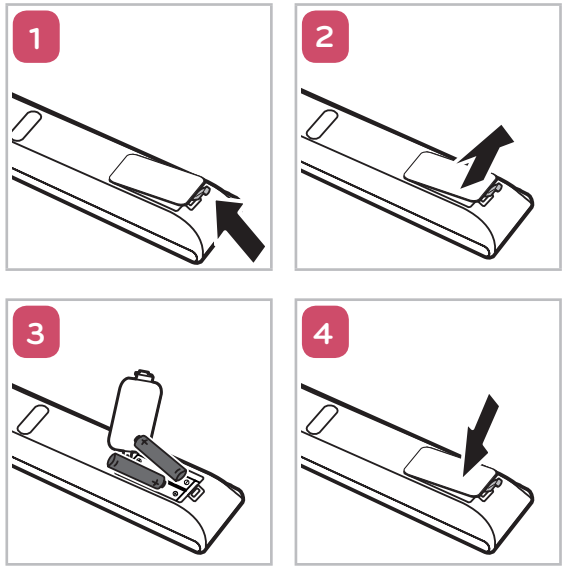

5

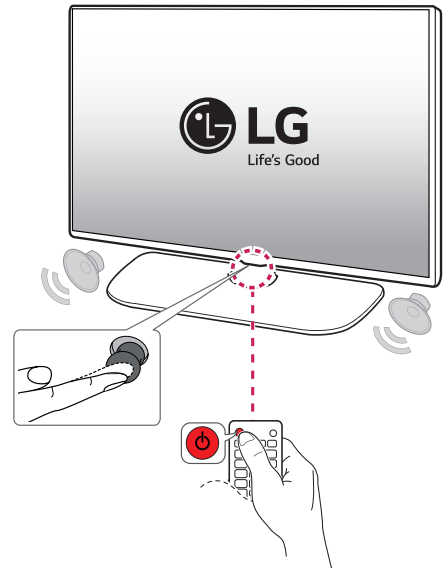

ENGLISH

MODELS		40LX770H (40LX770H-UA)	43LX770H (43LX770H-UA)	49LX770H (49LX770H-UA)
Dimensions (W x H x D)	With stand	911 x 576 x 282 (mm)	973 x 624 x 325 (mm)	1,106 x 701 x 325 (mm)
		35.8 x 22.6 x 11.1 (inches)	38.3 x 24.5 x 12.7 (inches)	43.5 x 27.5 x 12.7 (inches)
	Without stand	911 x 528 x 55.3 (mm)	973 x 573 x 37 (mm)	1,106 x 647 x 37 (mm)
		35.8 x 20.7 x 2.1 (inches)	38.3 x 22.5 x 1.4 (inches)	43.5 x 25.4 x 1.4 (inches)
Weight	With stand	10.4 kg (22.9 lbs)	13.6 kg (29.9 lbs)	17.8 kg (39.2 lbs)
	Without stand	7.5 kg (16.5 lbs)	10.2 kg (22.4 lbs)	14.4 kg (31.7 lbs)
Power Requirement		AC 100-240 V ~ 50/60 Hz		
Current Value / Power Consumption		0.9 A / 90 W	1.0 A / 100 W	1.2 A / 120 W

MODELS		55LX770H (55LX770H-UA)	65LX770H (65LX770H-UA)
Dimensions (W x H x D)	With stand	1,242 x 780 x 325 (mm)	1,461 x 899 x 294 (mm)
		48.8 x 30.7 x 12.7 (inches)	57.5 x 35.3 x 11.5 (inches)
	Without stand	1,242 x 724 x 37 (mm)	1,461 x 848 x 39 (mm)
		48.8 x 28.5 x 1.4 (inches)	57.5 x 33.3 x 1.5 (inches)
Weight	With stand	21.1 kg (46.5 lbs)	34 kg (74.9 lbs)
	Without stand	17.7 kg (39.0 lbs)	28.8 kg (63.4 lbs)
Power Requirement		AC 100-240 V ~ 50/60 Hz	
Current Value / Power Consumption		1.3 A / 130 W	1.6 A / 160 W

ESPAÑOL
FRANÇAIS

MODELOS MODÈLES		40LX770H (40LX770H-UA)	43LX770H (43LX770H-UA)	49LX770H (49LX770H-UA)
Dimensiones (Ancho x altura x profundidad)	Con base	911 x 576 x 282 (mm)	973 x 624 x 325 (mm)	1 106 x 701 x 325 (mm)
	Avec support	35,8 x 22,6 x 11,1 (pulgadas / po)	38,3 x 24,5 x 12,7 (pulgadas / po)	43,5 x 27,5 x 12,7 (pulgadas / po)
Dimensions (L x H x P)	Sin base	911 x 528 x 55,3 (mm)	973 x 573 x 37 (mm)	1 106 x 647 x 37 (mm)
	Sans support	35,8 x 20,7 x 2,1 (pulgadas / po)	38,3 x 22,5 x 1,4 (pulgadas / po)	43,5 x 25,4 x 1,4 (pulgadas / po)
Peso	Con base	10,4 kg (22,9 libras / lb)	13,6 kg (29,9 libras / lb)	17,8 kg (39,2 libras / lb)
	Avec support			
Poids	Sin base	7,5 kg (16,5 libras / lb)	10,2 kg (22,4 libras / lb)	14,4 kg (31,7 libras / lb)
	Sans support			
Potencia requerida Alimentation		AC 100-240 V ~ 50/60 Hz		
Corriente de consumo / Consumo de la potencia Valeur courante / Consommation électrique		0,9 A / 90 W	1,0 A / 100 W	1,2 A / 120 W

MFL68884932

MODELOS MODÈLES		55LX770H (55LX770H-UA)	65LX770H (65LX770H-UA)
Dimensiones (Ancho x altura x profundidad)	Con base	1 242 x 780 x 325 (mm)	1 461 x 899 x 294 (mm)
	Avec support	48,8 x 30,7 x 12,7 (pulgadas / po)	57,5 x 35,3 x 11,5 (pulgadas / po)
Dimensions (L x H x P)	Sin base	1 242 x 724 x 37 (mm)	1 461 x 848 x 39 (mm)
	Sans support	48,8 x 28,5 x 1,4 (pulgadas / po)	57,5 x 33,3 x 1,5 (pulgadas / po)
Peso	Con base Avec support	21,1 kg (46,5 libras / lb)	34 kg (74,9 libras / lb)
Poids	Sin base Sans support	17,7 kg (39,0 libras / lb)	28,8 kg (63,4 libras / lb)
Potencia requerida Alimentation		AC 100-240 V ~ 50/60 Hz	
Corriente de consumo / Consumo de la potencia Valeur courante / Consommation électrique		1,3 A / 130 W	1,6 A / 160 W

(For USA and Canada only)
(Para Estados Unidos y Canadá)

This product qualifies for ENERGY STAR® in the factory default (Home configuration) setting. Changing the factory default settings or enabling other features may increase power consumption that could exceed the limits necessary to quality for ENERGY STAR®. Refer to ENERGYSTAR.gov for more information on the ENERGY STAR® program.

(Pour les États-Unis et le Canada)

Ce produit est conforme aux normes ENERGY STAR® lorsque le « réglage d'usine par défaut (Résidentiel) » est sélectionné. Modifier les réglages d'usine par défaut ou activer d'autres fonctionnalités augmente la consommation d'énergie qui pourrait alors dépasser les limites de la qualification ENERGY STAR®. Consultez le site ENERGYSTAR.gov pour en savoir plus au sujet du programme ENERGY STAR®.

LG
Life's Good

OWNER'S MANUAL

Safety and Reference

LED TV*

* LG LED TVs are LCD TVs with LED backlighting.

Please read this manual carefully before operating your TV and retain it for future reference.

40LX770H	49UX970H
43LX770H	55UX970H
49LX770H	65UX970H
55LX770H	79UX970H
65LX770H	



www.lg.com

P/NO : MFL68925832 (1509-REV00)

Important Safety Instructions

Always comply with the following precautions to avoid dangerous situations and ensure peak performance of your product.



TO REDUCE THE RISK OF ELECTRIC SHOCK DO NOT REMOVE COVER (OR BACK). NO USER SERVICEABLE PARTS INSIDE. REFER TO QUALIFIED SERVICE PERSONNEL.

The lightning flash with arrowhead symbol within an equilateral triangle is intended to alert the user to the presence of uninsulated dangerous voltage within the product's enclosure that may be of sufficient magnitude to constitute a risk of electric shock to persons.

The exclamation point within an equilateral triangle is intended to alert the user to the presence of important operating and maintenance (servicing) instructions in the literature accompanying the appliance.

WARNING/CAUTION

- TO REDUCE THE RISK OF FIRE AND ELECTRIC SHOCK, DO NOT EXPOSE THIS PRODUCT TO RAIN OR MOISTURE.

WARNING

If you ignore the warning message, you may be seriously injured or there is a possibility of accident or death.

CAUTION

If you ignore the caution message, you may be slightly injured or the product may be damaged.

NOTE

The note helps you understand and use the product safely. Please read the note carefully before using the product.

WARNING: This product contains chemicals known to the State of California to cause cancer and birth defects or other reproductive harm. ***Wash hands after handling.***

Read these instructions.
Keep these instructions.
Heed all warnings.
Follow all instructions.



- Do not use this apparatus near water.



- Clean only with with dry cloth .



- Do not block any ventilation openings. Install in accordance with the manufacturer's instructions.



- Do not install near any heat sources such as radiators, heat registers, stoves, or other apparatus (including amplifiers) that produce heat.



- Do not defeat the safety purpose of the polarized or grounding-type plug. A polarized plug has two blades with one wider than the other. A grounding type plug has two blades and a third grounding prong. The wide blade or the third prong are provided for your safety. If the provided plug does not fit into your outlet, consult an electrician for replacement of the obsolete outlet.



- Protect the power cord from being walked on or pinched particularly at plugs, convenience receptacles, and the point where they exit from the apparatus.



- Only use attachments/accessories specified by the manufacturer.



ENGLISH

- Use only with the cart, stand, tripod, bracket, or table specified by the manufacturer, or sold with the apparatus. When a cart is used, use caution when moving the cart/apparatus combination to avoid injury from tip-over.



- Unplug this apparatus during lightning storms or when unused for long periods of time.



- Refer all servicing to qualified service personnel. Servicing is required when the apparatus has been damaged in any way, such as power-supply cord or plug is damaged, liquid has been spilled or objects have fallen into the apparatus, the apparatus has been exposed to rain or moisture, does not operate normally, or has been dropped.



- Do not press strongly upon the panel with a hand or a sharp object such as a nail, pencil, or pen, or make a scratch on it.



- Do not stick metal objects or any other conductive material into the power cord. Do not touch the end of the power cord while it is plugged in.
- Keep the packing anti-moisture material or vinyl packing out of the reach of children. Anti-moisture material is harmful if swallowed. If swallowed, induce vomiting and go to the nearest hospital. Additionally, vinyl packing can cause suffocation. Keep it out of the reach of children.

- CAUTION concerning the Power Cord (Can differ by country):
  Check the specification page of this owner's manual to be certain. Do not connect too many appliances to the same AC power outlet as this could result in fire or electric shock. Do not overload wall outlets. Overloaded wall outlets, loose or damaged wall outlets, extension cords, frayed power cords, or damaged or cracked wire insulation are dangerous. Any of these conditions could result in electric shock or fire. Periodically examine the cord of your appliance, and if its appearance indicates damage or deterioration, unplug it, discontinue use of the appliance, and have the cord replaced with an exact replacement part by an authorized service. Protect the power cord from physical or mechanical abuse, such as being twisted, kinked, pinched, closed in a door, or walked upon. Pay particular attention to plugs, wall outlets, and the point where the cord exits the appliance. Do not move the TV with the power cord plugged in. Do not use a damaged or loose power cord. Be sure do grasp the plug when unplugging the power cord. Do not pull on the power cord to unplug the TV.



- **Warning** - To reduce the risk of fire or electrical shock, do not expose this product to rain, moisture or other liquids. Do not touch the TV with wet hands. Do not install this product near flammable objects such as gasoline or candles, or expose the TV to direct air conditioning.



- Do not expose to dripping or splashing and do not place objects filled with liquids, such as vases, cups, etc. on or over the apparatus (e.g., on shelves above the unit).



- **Grounding**
  (Except for devices which are not grounded.) Ensure that you connect the earth ground wire to prevent possible electric shock (i.e., a TV with a three-prong grounded AC plug must be connected to a three-prong grounded AC outlet). If grounding methods are not possible, have a qualified electrician install a separate circuit breaker. Do not try to ground the unit by connecting it to telephone wires, lightning rods, or gas pipes.

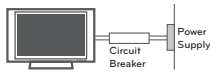

- As long as this unit is connected to the AC wall outlet, it is not disconnected from the AC power source even if the unit is turned off.
- Do not attempt to modify this product in any way without written authorization from LG Electronics. Unauthorized modification could void the user's authority to operate this product.
- **Outdoor Antenna Grounding**
  (Can differ by country):
  If an outdoor antenna is installed, follow the precautions below. An outdoor antenna system should not be located in the vicinity of overhead power lines or other electric light or power circuits, or where it can come in contact with such power lines or circuits as death or serious injury can occur. Be sure the antenna system is grounded to provide some protection against voltage surges and built-up static charges. Section 810 of the National Electrical Code (NEC) in the U.S.A. provides information with respect to proper grounding of the mast and supporting structure, grounding of the lead-in wire to an antenna discharge unit, size of grounding conductors, location of antenna discharge unit, connection to grounding electrodes and requirements for the grounding electrode.
  Antenna grounding according to the National Electrical Code, ANSI/NFPA 70

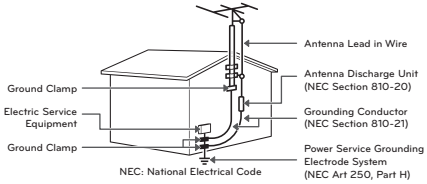

- **Cleaning**
  When cleaning, unplug the power cord and wipe gently with a soft cloth to prevent scratching. Do not spray water or other liquids directly on the TV as electric shock may occur. Do not clean with chemicals such as alcohol, thinners, or benzene.
- **Moving**
  Make sure the product is turned off, unplugged, and all cables have been removed. It may take 2 or more people to carry larger TVs. Do not press or put stress on the front panel of the TV.
- **Ventilation**
  Install your TV where there is proper ventilation. Do not install in a confined space such as a bookcase. Do not cover the product with cloth or other materials while plugged. Do not install in excessively dusty places.
- If you smell smoke or other odors coming from the TV, unplug the power cord and contact an authorized service center.
- Keep the product away from direct sunlight.
- Never touch this apparatus or antenna during a lightning storm.
- When mounting a TV on the wall, make sure not to install the TV by hanging the power and signal cables on the back of the TV.
- Do not allow an impact shock, any objects to fall into the product, and do not drop anything onto the screen.
- **DISCONNECTING THE DEVICE FROM THE MAIN POWER**
  The power plug is the disconnecting device. In case of an emergency, the power plug must remain readily accessible.
- **Batteries**
  Store the accessories (battery, etc.) in a safe location out of the reach of children.
- This apparatus uses batteries. In your community there might be regulations that require you to dispose of these batteries properly due to environmental considerations. Please contact your local authorities for disposal or recycling information.
- Do not dispose of batteries in a fire.
- Do not short circuit, disassemble, or allow the batteries to overheat.
- Do not use high voltage electrical equipment near the TV, (e.g., a bug zapper.)
  This may result in product malfunction.

- **Dot Defect**
  The panel is a high technology product with resolution of two million to six million pixels. In a very few cases, you could see fine dots on the screen while you're viewing the TV. Those dots are deactivated pixels and do not affect the performance and reliability of the TV.
- **Generated Sound**
  Cracking noise A cracking noise that occurs when watching or turning off the TV is generated by plastic thermal contraction due to temperature and humidity. This noise is common for products where thermal deformation is required.
  Electrical circuit humming/panel buzzing
  A low level noise is generated from a high-speed switching circuit, which supplies a large amount of current to operate a product. It varies depending upon the product. This generated sound does not affect the performance and reliability of the product.
- Take care not to touch the ventilation openings. When watching the TV for a long period, the ventilation openings may become hot. This does not affect the performance of the product or cause defects in the product.
- Do not install this product on a wall if it could be exposed to oil or oil mist. This may damage the product and cause it to fall.
- If the TV feels cold to the touch, there may be a small flicker when it is turned on. This is normal; there is nothing wrong with TV. Some minute dot defects may be visible on the screen, appearing as tiny red, green, or blue spots. However, they have no adverse effect on the TV's performance. Avoid touching the LCD screen or holding your finger(s) against it for long periods of time. Doing so may produce some temporary distortion effects on the screen.
- If water or another substance enters the product (like a AC adapter, power cord, TV), disconnect the power cord and contact the service centre immediately.
  Otherwise, this may result in fire or electric shock.



- Only use an authorized AC adapter and power cord approved by LG Electronics. Otherwise, this may result in fire, electric shock, malfunction or product deformation.

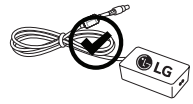

- Never Disassemble the AC adapter or power cord.
  This may result in fire or electric shock.



- Handle the adapter carefully to avoid dropping or striking it. An impact could damage the adapter.

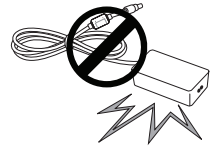

Preventing Image Burn or Burn-in on Your TV Screen

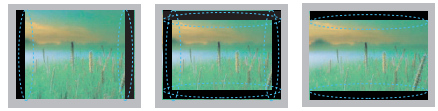

- If a fixed image displays on the TV screen for a long period of time, it will be imprinted and become a permanent disfigurement on the screen. This is image burn or burn-in and not covered by the warranty.
- If the aspect ratio of the TV is set to 4:3 for a long period of time, image burn may occur on the letterboxed area of the screen.
- Avoid displaying a fixed image on the TV screen for a long period of time to prevent image burn.

FCC Notice

(For USA)

This equipment has been tested and found to comply with the limits for a Class B digital device, pursuant to Part 15 of the FCC Rules. These limits are designed to provide reasonable protection against harmful interference in a residential installation. This equipment generates, uses and can radiate radio frequency energy and, if not installed and used in accordance with the instructions, may cause harmful interference to radio communications. However, there is no guarantee that interference will not occur in a particular installation. If this equipment does cause harmful interference to radio or television reception, which can be determined by turning the equipment off and on, the user is encouraged to try to correct the interference by one or more of the following measures:

- Reorient or relocate the receiving antenna.
- Increase the separation between the equipment and the receiver.
- Connect the equipment to an outlet on a circuit different from that to which the receiver is connected.
- Consult the dealer or an experienced radio/TV technician for help.

This device complies with part 15 of the FCC Rules. Operation is subject to the following two conditions: (1) this device may not cause harmful interference and (2) this device must accept any interference received, including interference that may cause undesired operation of the device. Any changes or modifications in construction of this device which are not expressly approved by the party responsible for compliance could void the user's authority to operate the equipment.

FCC Radio Frequency Interference Requirements (for UNII devices)

High power radars are allocated as primary users of the 5.25 to 5.35 GHz and 5.65 to 5.85 GHz bands. These radar stations can cause interference with and/or damage this device. This device cannot be co-located with any other transmitter.

FCC RF Radiation Exposure Statement

[For having wireless function (WLAN, Bluetooth,...)]

This equipment complies with FCC radiation exposure limits set forth for an uncontrolled environment. This transmitter must not be colocated or operating in conjunction with any other antenna or transmitter. This equipment should be installed and operated with minimum distance 20 cm (7.8 inches) between the radiator and your body. Users must follow the specific operating instructions for satisfying RF exposure compliance.

Industry Canada Statement

(For Canada)
[For having wireless function (WLAN, Bluetooth,...)]

This device complies with RSS-210 of the Industry Canada Rules. Operation is subject to the following two conditions:

1. this device may not cause interference and

2. this device must accept any interference, including interference that may cause undesired operation of the device.

IC Radiation Exposure Statement

(For Canada)
[For having wireless function (WLAN, Bluetooth,...)]

This equipment complies with IC radiation exposure limits set forth for an uncontrolled environment. This equipment should be installed and operated with minimum distance 20 cm (7.8 inches) between the radiator & your body.

NOTE : THE MANUFACTURER IS NOT RESPONSIBLE FOR ANY RADIO OR TV INTERFERENCE CAUSED BY UNAUTHORIZED MODIFICATIONS TO THIS EQUIPMENT. SUCH MODIFICATIONS COULD VOID THE USER'S AUTHORITY TO OPERATE THE EQUIPMENT.

⚠ WARNING

(For Canada)
[For product having the wireless function using 5 GHz frequency bands]

- The device for operation in the band 5150–5250 MHz is only for indoor use to reduce the potential for harmful interference to co-channel mobile satellite systems;
- The maximum antenna gain permitted for devices in the bands 5250–5350 MHz and 5470–5725 MHz shall comply with the e.i.r.p. limit; and
- The maximum antenna gain permitted for devices in the band 5725–5825 MHz shall comply with the e.i.r.p. limits specified for point-to-point and non point-to-point operation as appropriate.
- High-power radars are allocated as primary users (i.e. priority users) of the bands 5250–5350 MHz and 5650–5850 MHz and that these radars could cause interference and/or damage to LE-LAN devices.

Note to Cable/TV Installer

(For USA and Canada)

This reminder is provided to call the CATV system installer's attention to Article 820-40 of the National Electric Code (U.S.A.). The code provides guidelines for proper grounding and, in particular, specifies that the cable ground shall be connected to the grounding system of the building, as close to the point of the cable entry as practical.

LG Recycling Policy

(For USA)

LG Electronics offers a customized e-waste takeback and recycling service that meets local needs and requirements in the countries where e-waste regulations are in place, and also provides product and packaging take-back and recycling service voluntarily in some countries.
LG Electronics evaluates products' recyclability at the design step using LG's recyclability evaluation tool, with the goal of improving recyclability where practicable.
Through these activities, LG seeks to contribute to conserving natural resources and protecting the environment.
For more information about the LG Recycling Policy, please visit our global site at http://www.lg.com/global/sustainability/environment/take-back-recycling

Viewing 3D Imaging (For 3D models)

⚠ WARNING

Viewing Environment

- Viewing Time
  - When watching 3D content, take 5 to 15 minute breaks every hour. Viewing 3D content for a long period of time may cause headache, dizziness, fatigue, or eye strain.

Those that have a photosensitive seizure or chronic illness

- Some users may experience a seizure or other abnormal symptoms when they are exposed to a flashing light or particular pattern from 3D content.
- Do not watch 3D videos if you feel nauseous, are pregnant and/ or have a chronic illness such as epilepsy, cardiac disorder, or blood pressure disease, etc.
- 3D Content is not recommended for those who suffer from stereo blindness or stereo anomaly. Double images or discomfort in viewing may be experienced.
- If you have strabismus (cross-eyed), amblyopia (weak eyesight), or astigmatism, you may have trouble sensing depth and easily feel fatigue due to double images. It is advised to take more frequent breaks than the average adult.
- If your eyesight varies between your right and left eye, correct your eyesight prior to watching 3D content.

Symptoms which require discontinuation or refraining from watching 3D content

- Do not watch 3D content when you feel fatigue from lack of sleep, overwork, or intoxication.
- When these symptoms are experienced, stop using/watching 3D content and get enough rest until the symptom subsides.
  - Consult your doctor when the symptoms persist. Symptoms may include headache, eyeball pain, dizziness, nausea, palpitation, blurriness, discomfort, double image, eyestrain, or fatigue.

⚠ CAUTION

Viewing Environment

- Viewing Distance
  - Maintain a distance of at least twice the screen's diagonal length when watching 3D content. If you feel discomfort in viewing 3D content, move further away from the TV.

Viewing Age

- Infants / Children
  - Usage/ Viewing 3D content for children under the age of 5 are prohibited.
  - Children under the age of 10 may overreact and become overly excited because their vision is in development, for example, trying to touch the screen or trying to jump into it. Special monitoring and extra attention is required for children watching 3D content.
  - Children have greater binocular disparity of 3D presentations than adults because the distance between the eyes is shorter than one of adults. Therefore they will perceive more stereoscopic depth compared to adults for the same 3D image.
- Teenagers
  - Teenagers may be stimulated to light coming from 3D videos. Advise them not to watch 3D videos for a long time when they are tired.
- Elderly
  - The elderly may perceive less of a 3D effect than the youth. Do not sit closer to the TV than the recommended distance.

Cautions when using the 3D glasses

- Only use LG 3D glasses. Otherwise, you may not be able to view 3D videos properly.
- Do not use 3D glasses instead of your normal glasses, sunglasses, or protective goggles.
- Using modified 3D glasses may cause eye strain or image distortion.
- Do not keep your 3D glasses in extremely high or low temperatures. It will cause deformation.
- The 3D glasses are fragile and are easily scratched. Use a soft, clean piece of cloth when wiping the lenses. Do not scratch the lenses of the 3D glasses with sharp objects or clean/wipe them with chemicals.

Preparing

NOTE

- Image shown may differ from your TV.
- Your TV's OSD (On Screen Display) may differ slightly from that shown in this manual.
- The available menus and options may differ from the input source or product model that you are using.
- New features may be added to this TV in the future.
- The items supplied with your product may vary depending upon the model.
- Product specifications or contents of this manual may be changed without prior notice due to upgrade of product functions.
- For an optimal connection, HDMI cables and USB devices should have bezels less than 10 mm (0.39 inches) thick and 18 mm (0.7 inches) width.
- Use an extension cable that supports USB 2.0 if the USB cable or USB flash drive does not fit into your TV's USB port.
- Use a certified cable with the HDMI logo attached. If you do not use a certified HDMI cable, the screen may not display or a connection error may occur.
- Recommended HDMI cable types (3 m or less)
  - High-Speed HDMI®/™ cable
  - High-Speed HDMI®/™ cable with Ethernet

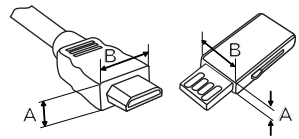

***A ≦ 10 mm (0.39 inches)**
***B ≦ 18 mm (0.7 inches)**

⚠ CAUTION

- Do not use any unapproved items to ensure the safety and lifespan of the product.
- Any damages or injuries by using unapproved items are not covered by the warranty.
- Some models appear to have a thin film on the screen. It is actually part of the screen; do not remove it.
- When attaching the stand to the TV set, place the screen facing down on a cushioned table or flat surface to protect the screen from scratches.
- Make sure that the screws are fastened tightly. (If they are not fastened securely enough, the TV may tilt forward after being installed.)
- Do not fasten the screws with excessive force; otherwise, they may be worn out and become loose.

Warning when using USB storage devices

- USB storage devices with a built-in auto recognition program or its own driver may not work.
- Some USB storage devices may not work or may work improperly.
- Use only those USB storage devices formatted with FAT32 or NTFS File System provided by Windows.
- For external USB HDD, use devices with less than 5V-rated voltages and 500 mA-rated current.
- It is recommended to use USB flash drive with 32 GB or less and USB HDD with 2 TB or less.
- If a USB HDD with power-saving function does not work properly, turn the power off and on. For more information, refer to the user manual of USB HDD.
- Data in the USB storage device can be damaged so back up important files in other devices. Data maintenance is the user's responsibility. The manufacturer is not responsible for data loss.

Optional Extras

Optional extras can be changed or modified for quality improvement without any notification. Contact your dealer for buying these items. These devices work only with certain models. The model name or design may be changed due to the manufacturer's circumstances or policies.

(Depending upon model)

AG-F* ** Cinema 3D Glasses	**AN-MR6** ** Magic Remote	**AN-VC550** Smart Camera

Maintenance

Cleaning Your TV

Clean your TV regularly to keep it at peak performance and to extend the product's lifespan.

⚠ CAUTION

- Before cleaning, turn the power off and disconnect the power cord and all other cables.
- When the TV is left unattended or unused for a long time, disconnect the power cord from the wall outlet to prevent possible damage from lightning or power surges.

Screen, Frame, Cabinet, and Stand

To remove dust or light dirt, wipe the surface with a dry, clean, and soft cloth.
To remove major dirt, wipe the surface with a soft cloth dampened in clean water or a diluted mild detergent. Then wipe immediately with a dry cloth.

⚠ CAUTION

- Do not push, rub, or hit the surface with your fingernail or a sharp object, as this may result in scratches on the screen and image distortions.
- Do not use any chemicals, such as waxes, benzene, alcohol, thinners, insecticides, air fresheners, or lubricants, as these may damage the screen's finish and cause discoloration.
- Do not spray liquid onto the surface. If water enters the TV, it may result in fire, electric shock, or malfunction.

Power Cord

Remove the accumulated dust or dirt on the power cord regularly.

Lifting and Moving the TV

When moving or lifting the TV, read the following to prevent the TV from being scratched or damaged and for safe transportation regardless of its type and size.

- It is recommended to move the TV in the box or packing material that the TV originally came in.
- Before moving or lifting the TV, disconnect the power cord and all cables.

- When holding the TV, the screen should face away from you to avoid damage.



- Hold the top and bottom of the TV frame firmly. Make sure not to hold the transparent part, speaker, or speaker grille area.

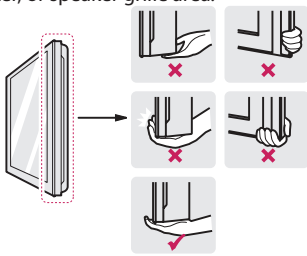

- Use at least two people to move a large TV.
- When transporting the TV by hand, hold the TV as shown in the following illustration.

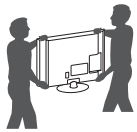

- When transporting the TV, do not expose the TV to jolts or excessive vibration.
- When transporting the TV, keep the TV upright; never turn the TV on its side or tilt towards the left or right.

⚠ CAUTION

- Avoid touching the screen at all times, as this may result in damage to the screen.
- Do not place the product on the floor with its front facing down without padding. Failure to do so may result in damage to the screen.
- Do not move the TV by holding the cable holders, as the cable holders may break, and injuries and damage to the TV may occur. (Depending upon model)

Using the Joystick Button

(Depending upon model)
(Image shown may differ from your TV.)

You can operate the TV by pressing the button or moving the joystick left, right, up, or down.

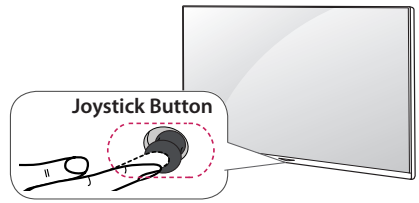

Basic Functions

 Power On	When the TV is turned off, place your finger on the joystick button, press it once, and release it.
 Power Off	When the TV is turned on, place your finger on the joystick button, press it once for a few seconds, and release it. All running apps will close.
 Volume Control	Place your finger on the joystick button and move it left or right to adjust the volume level.
 Channels Control	Place your finger on the joystick button and move it up or down to adjust the channel.

NOTE

- Move the joystick button up, down, left, or right. Be careful not to press it. If you press it first, you may not be able to adjust the volume or scroll through the channels.

Adjusting the Menu

When the TV is turned on, press the joystick button one time. You can adjust the menu items moving the joystick button up, down, left, or right.

⏻	Turns the power off.
⚙	Accesses the quick settings.
✕	Clears on-screen displays and returns to TV viewing
⇆	Changes the input source.

ENGLISH

Mounting on a Table

(Image shown may differ from your TV.)

1 Lift and tilt the TV into its upright position on a table.
- Leave a 10 cm (4 inches) (minimum) space from the wall for proper ventilation.

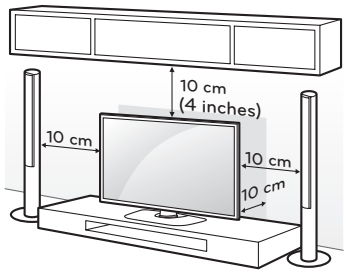

2 Connect the power cord to a wall outlet.

⚠ CAUTION
- Do not place the TV near or on sources of heat, as this may result in fire or other damage.

Adjusting the Angle of the TV to Suit View

(Depending upon model)

Swivel 20 degrees to the left or right and adjust the angle of the TV to suit your view.

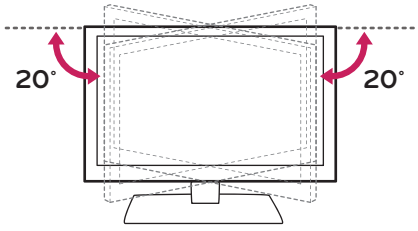

⚠ CAUTION
- When adjusting the angle of the TV, watch out for your fingers.
  - Personal injury may occur if hands or fingers are pinched. If the product is tilted too much, it may fall, causing damage or injury.

Attaching the TV to a desk (optional)

(Depending upon model)

The TV should be attached to a desk so it cannot be pulled in a forward/backward direction, potentially causing injury or damaging the product.

[TYPE 1]

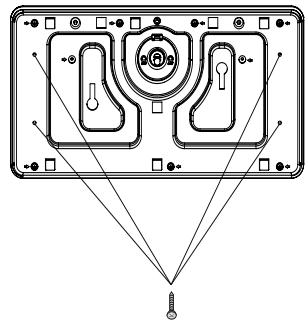

4-Screws
(Not provided as parts of the product)

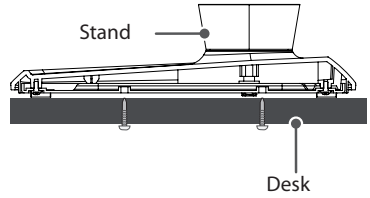

NOTE
- Screw: M5 x L (*L: Table depth + 8~10 mm)
  ex) Table depth: 15 mm, Screw: M5 x L25

ENGLISH

[TYPE 2]

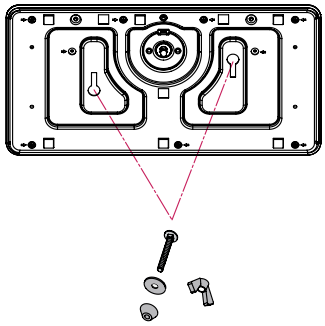

2-Screws, 2-Washers, 2-Nuts
(provided as parts of the product)

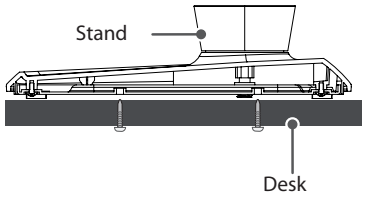

Using the kensington security system

(Depending upon model)
(Image shown may differ from your TV.)

The Kensington security system connector is located at the rear or stand of the TV. For more information of installation and using, refer to the manual provided with the Kensington security system or visit *http://www.kensington.com*. Connect the Kensington security system cable between the TV and a table.

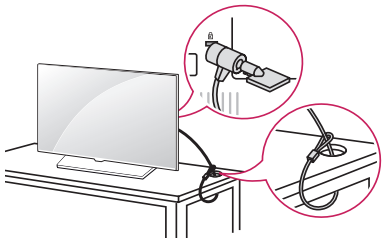

NOTE

- The Kensington security system is optional. You can obtain additional accessories from your local dealer.

Securing the TV to a Wall (optional)

(Depending upon model)

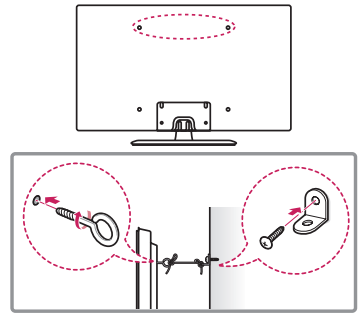

1 Insert and tighten the eye-bolts or TV brackets and bolts on the back of the TV.
   - If there are bolts inserted at the eye-bolts position, remove the bolts first.
2 Mount the wall brackets with the bolts to the wall. Match the location of the wall bracket and the eye-bolts on the rear of the TV.
3 Connect the eye-bolts and wall brackets tightly with a sturdy rope or cable. Make sure to keep the rope parallel to the flat surface.

CAUTION

- Make sure that children do not climb on or hang on the TV.

NOTE

- Use a platform or cabinet that is strong and large enough to support the TV securely.
- Brackets, bolts, and ropes are optional. You can obtain additional accessories from your local dealer.

Mounting on a Wall

An optional wall mount can be used with your LG Television. Consult with your local dealer for a wall mount that supports the VESA standard used by your TV model. Carefully attach the wall mount bracket at the rear of the TV. Install the wall mount bracket on a solid wall perpendicular to the floor. If you are attaching the TV to other building materials, please contact qualified personnel to install the wall mount. Detailed instructions will be included with the wall mount. We recommend that you use an LG brand wall mount. The LG wall mount is easy to adjust or to connect the cables. When you do not use LG's wall mount bracket, use a wall mount bracket where the device is adequately secured to the wall with enough space to allow connectivity to external devices. If you are using a non-adjustable mount, attach the mount to the wall. Attach the cables to the TV first, then attach the TV to the mount.

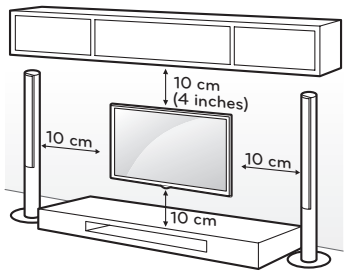

Make sure to use screws and wall mounts that meet the VESA standard. Standard dimensions for the wall mount kits are described in the following table.

Model	40/43LX770H	49/55LX770H 49/55UX970H
VESA (A x B)	200 x 200	300 x 300
Standard screw	M6	M6
Number of screws	4	4
Wall mount bracket (optional)	LSW240B MSW240	LSW350B MSW240

Model	65LX770H 65UX970H	79UX970H
VESA (A x B)	300 x 300	600 x 400
Standard screw	M6	M8
Number of screws	4	4
Wall mount bracket (optional)	LSW350B	LSW640B

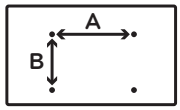

⚠ CAUTION

- Disconnect the power before moving or installing the TV. Otherwise electric shock may occur.
- Remove the stand before installing the TV on a wall mount by performing the stand attachment in reverse.
- If you install the TV on a ceiling or slanted wall, it may fall and result in severe injury. Use an authorized LG wall mount and contact the local dealer or qualified personnel. When using a third-party wall mount, it is not covered by the warranty.
- Do not over tighten the screws as this may cause damage to the TV and void your warranty.
- Use the screws and wall mounts that meet the VESA standard. Any damages or injuries by misuse or using an improper accessory are not covered by the warranty.

NOTE

- Use the screws that are listed in the VESA standard screw specifications.
- The wall mount kit includes an installation manual and necessary parts.
- The wall mount bracket is optional. You can obtain additional accessories from your local dealer.
- The length of screws may differ depending upon the wall mount. Make sure to use the proper length.
- For more information, refer to the manual supplied with the wall mount.
- When using the wall mounting bracket, apply the adhesive protective label to cover the unused stand opening(s). This will prevent the accumulation of dust and dirt. (Do this only when the labels are provided with your model.)

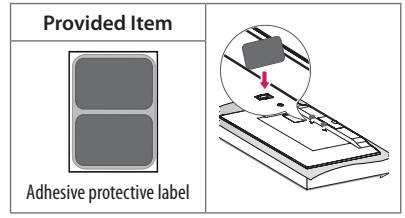

- Depending upon the shape of the stand, use a flat tool to remove the stand cover as illustrated below. (e.g., a flat screwdriver) (For 79UX970H)

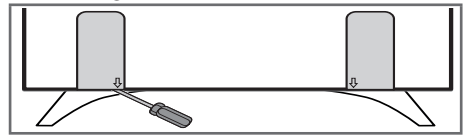

Connections (Notifications)

You can connect various external devices to the TV. Supported external devices are: HD receivers, DVD players, VCRs, audio systems, USB storage devices, PC, gaming devices, and other external devices. For more information on external device's connection, refer to the manual provided with each device.

NOTE

- This model supports 4K (ULTRA HD) videos only in HDMI input. (For UX970H series)
- ULTRA HD videos are not supported in the tuner or USB input. (For UX970H series)
- If you record a TV program on a DVD recorder or VCR, make sure to connect the TV signal input cable to the TV through a DVD recorder or VCR. For more information about recording, refer to the manual provided with the connected device.
- The external device connections shown may differ slightly from illustrations in a manual.
- Connect external devices to the TV regardless about the order of the TV port.
- If you connect a gaming device to the TV, use the cable supplied with the gaming device.
- Refer to the external equipment's manual for operating instructions.

Connecting to an Antenna or Cable

Connect an antenna, cable, or cable box to watch TV while referring to the following. The illustrations may differ from the actual items and an RF cable is optional.

CAUTION

- Make sure not to bend the copper wire of the RF cable.

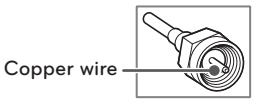

- Complete all connections between devices, and then connect the power cord to the power outlet to prevent damage to your TV.

NOTE

- Use a signal splitter to use 2 TVs or more.
- DTV Audio Supported Codec: MPEG, Dolby Digital.
- Direct ULTRA HD broadcast is unavailable in areas without a ULTRA HD signal. (For UX970H series)

Other Connections

Connect your TV to external devices. For the best picture and audio quality, connect the external device and the TV with the HDMI cable.

NOTE

- Use only with the 3-pole 3.5 mm stereo jack.
- Do not connect your headphones or earphones to the port for connecting an external speaker.

Remote Control

(Image shown may differ from your TV.)

The descriptions in this manual are based on the buttons on the remote control. Please read this manual carefully and use the TV correctly. To install batteries, open the battery cover, replace batteries (1.5 V AAA) matching the ⊕ and ⊖ ends to the label inside the compartment, and close the battery cover. Failure to match the correct polarities of the battery may cause the battery to burst or leak, resulting in fire, personal injury, or ambient pollution. To remove the batteries, perform the installation actions in reverse. This remote uses infrared light. When in use, it should be pointed in the direction of the TV's remote sensor.

CAUTION

- Do not mix old and new batteries, as this may damage the remote control.

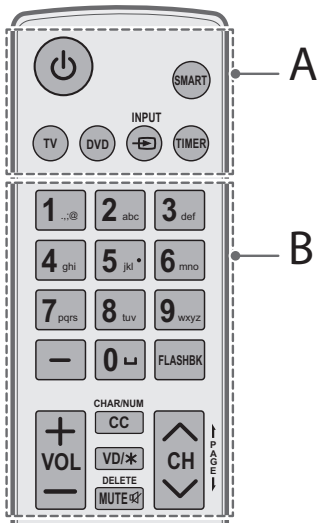

A

(POWER) Turns the TV on or off.

SMART Accesses the Smart menu.

TV Selects the remote's operating mode: TV.

DVD Selects the remote's operating mode: DVD.

INPUT Changes the input source.

TIMER Turns the TV off in a set amount of time.

B

Number button Enters numbers. Also supports characters.

- (DASH) Inserts a dash between numbers such as 2-1 and 2-2.

FLASHBK Tunes to the last channel or input viewed.

+ VOL − Adjusts the volume level.

CHAR/NUM Switches between Letter and Number input modes.

CC Selects a closed caption.

VD/* Enables VD function. SAP (Secondary Audio Program) feature can also be enabled by pressing the VD key.

DELETE Deletes letters and numbers.

MUTE Mutes all sounds.

∧ CH ∨ Scrolls through the saved channels.

PAGE Moves to the previous or next screen.

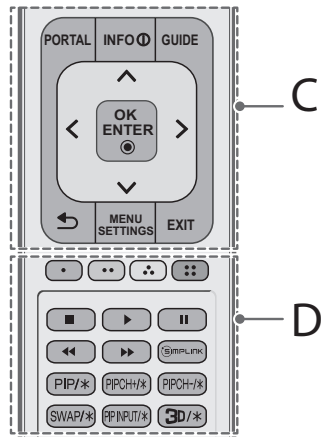

C

PORTAL Displays and removes the interactive menu.

INFO Views the information of the current program.

GUIDE Displays and removes the electronic program guide of Pro:Centric Application.

Navigation button (up/down/left/right) Scrolls through menus or options.

OK / ENTER Selects menus or options and confirms your input.

(BACK) Returns to the previous screen.

MENU / SETTINGS Accesses the quick settings.

EXIT Clears all on-screen displays and returns to TV viewing.

D

Color buttons These access special functions in some menus. (Red, Green, Yellow, Blue)

Control buttons (■, ▶, ❚❚, ◀◀, ▶▶) Controls the SIMPLINK compatible devices (USB, SIMPLINK).

SIMPLINK Feature can only be enabled or disabled by installer menu settings. Configuration of this feature is not supported on TV remote control.

PIP/*, PIPCH+/*, PIPCH-/*, SWAP/*, PIP INPUT/* Not functional.

3D/* Used for viewing 3D video. (For 3D models)

ENGLISH

To select Picture Mode

MENU / SETTINGS → PICTURE → Picture Mode

Select the picture mode optimized for the viewing environment or the program.

- **Vivid** Heightens contrast, brightness and sharpness to display vivid images.
- **Standard** Displays images in standard levels of contrast, brightness and sharpness.
- **APS** APS (Auto power saving) mode reduces power consumption by dimming control.
- **Cinema** / **Sports** / **Game** Displays the optimum picture for movie, Sports, or game.
- **Expert** Menu for adjusting picture quality that allows experts and amateurs to enjoy the best TV viewing. This menu for adjustment is provided for ISF-certified picture tuning professionals. (ISF logo can only be used on ISF-certified TVs.) ISFccc: Imaging Science Foundation Certified Calibration Control
- Depending upon input signal, available range of picture modes may differ.
- **Expert** mode is for picture tuning professionals to control and fine-tune using a specific image. For normal images, the effects may not be drastic.

To use HDMI ULTRA HD Deep Color (For UX970H series)

MENU / SETTINGS → ⓘ → PICTURE → HDMI ULTRA HD DEEP COLOR:

- **On**: Support 4K @ 60 Hz (4:4:4, 4:2:2, 4:2:0)
- **Off**: Support 4K @ 60 Hz (4:2:0)

- If the device connected to Input Port also supports ULTRA HD Deep Color, your picture may be clearer. However, if the device doesn't support it, it may not work properly. In that case, connect the device to a different HDMI port or change the TV's **HDMI ULTRA HD Deep Color** setting to **Off**.
  - This feature is available only on certain models which support HDMI ULTRA HD Deep Color.

Specifications

Product specifications may be changed without prior notice due to upgrade of product functions.

Television System

ATSC, NTSC-M, 64 & 256 QAM

Program Coverage

VHF 2-13, UHF 14-69, DTV 2-69, CATV 1-135, CADTV 1-135

External Antenna Impedance

75 Ω

Environment Condition

- **Operating Temperature**
  0 °C to 40 °C (32 °F to 104 °F)
- **Operating Humidity**
  Less than 80 %
- **Storage Temperature**
  -20 °C to 60 °C (-4 °F to 140 °F)
- **Storage Humidity**
  Less than 85 %

Wireless Module (LGSBW41) Specifications

Wireless LAN		Bluetooth	
Standard	IEEE 802.11a/b/g/n	**Standard**	Bluetooth Version 4.0
Frequency range	2400 to 2483.5 MHz 5150 to 5250 MHz 5725 to 5850 MHz	**Frequency range**	2400 to 2483.5 MHz
Output power (Max.)	802.11a: 11.5 dBm 802.11b: 11 dBm 802.11g: 10.5 dBm 802.11n - 2.4 GHz: 11 dBm 802.11n - 5 GHz: 12.5 dBm	**Output power (Max.)**	10 dBm or Lower

- Because band channel used by the country could be different, the user can not change or adjust the operating frequency and this product is set for the regional frequency table.
- This device should be installed and operated with minimum distance 20 cm (7.8 inches) between the device and your body. And this phrase is for the general statement for consideration of user environment.
- Contains FCC ID: BEJLGSBW41 /
  Contains IC: 2703H-LGSBW41

HDMI (PC) Supported Mode

Resolution	Horizontal Frequency (kHz)	Vertical Frequency (Hz)
640 x 350	31.46	70.09
720 x 400	31.46	70.08
640 x 480	31.46	59.94
800 x 600	37.87	60.31
1024 x 768	48.36	60.00
1152 x 864	54.34	60.05
1280 x 1024	63.98	60.02
1360 x 768	47.71	60.01
1920 x 1080	67.50	60.00
3840 x 2160	67.50	30.00
3840 x 2160	56.25	25.00
3840 x 2160	54.00	24.00
4096 x 2160	53.95	23.97
4096 x 2160	54.00	24.00

For UX970H series

HDMI (DTV) Supported Mode

Resolution	Horizontal Frequency (kHz)	Vertical Frequency (Hz)
640 x 480p	31.46	59.94
	31.50	60.00
720 x 480p	31.47	59.94
	31.50	60.00
1280 x 720p	44.96	59.94
	45.00	60.00
1920 x 1080i	33.72	59.94
	33.75	60.00
1920 x 1080p	26.97	23.97
	27.00	24.00
	33.71	29.97
	33.75	30.00
	67.43	59.94
	67.50	60.00
3840 x 2160p	53.95	23.98
	54.00	24.00
	56.25	25.00
	61.43	29.97
	67.50	30.00
	135.00	60.00
	135.00	59.94
4096 x 2160p	53.95	23.98
	54.00	24.00
	56.25	25.00
	61.43	29.97
	67.50	30.00
	135.00	60.00
	135.00	59.94

For UX970H series

Component Port Connecting Information

Component ports on the TV	Y	P_B	P_R

Video output ports on DVD player	Y	P_B	P_R
	Y	B-Y	R-Y
	Y	Cb	Cr
	Y	Pb	Pr

Component Supported Mode

Resolution	Horizontal Frequency (kHz)	Vertical Frequency (Hz)
720 x 480i	15.73	60.00
	15.73	59.94
720 x 480p	31.50	60.00
	31.47	59.94
1280 x 720p	45.00	60.00
	44.96	59.94
1920 x 1080i	33.75	60.00
	33.72	59.94
1920 x 1080p	67.50	60.00
	67.432	59.94

Supported Video Formats

Extenstion	Codec	
.asf .wmv	Video	VC-1 Advanced Profile (WMVA excluded), VC-1 Simple and Main Profiles
	Audio	WMA Standard (WMA v1/WMA Speech excluded), WMA 9 Professional
.divx .avi	Video	DivX3.11, DivX4, DivX5, DivX6, XViD(except 3 warp-point GMC), H.264/AVC, Motion Jpeg, MPEG-4
	Audio	MPEG-1 Layer I, II, MPEG-1 Layer III (MP3), Dolby Digital, LPCM, ADPCM, DTS
.mp4 .m4v .mov	Video	H.264/AVC, MPEG-4, HEVC
	Audio	AAC, MPEG-1 Layer III (MP3)
.3gp .3g2	Video	H.264/AVC, MPEG-4
	Audio	AAC, AMR-NB, AMR-WB
.mkv	Video	MPEG-2, MPEG-4, H.264/AVC, VP8, VP9, HEVC
	Audio	Dolby Digital, PCM, DTS, MPEG-1 Layer I, II, MPEG-1 Layer III (MP3), AAC
.ts .trp .tp .mts	Video	H.264/AVC, MPEG-2, HEVC
	Audio	MPEG-1 Layer I, II, MPEG-1 Layer III (MP3), Dolby Digital, Dolby Digital Plus, AAC, PCM
.mpg .mpeg .dat	Video	MPEG-1, MPEG-2
	Audio	MPEG-1 Layer I, II, MPEG-1 Layer III (MP3)
.vob	Video	MPEG-1, MPEG-2
	Audio	Dolby Digital, MPEG-1 Layer I, II, DVD-LPCM
.rm .rmvb	Video	RV30, RV40
	Audio	Realaudio6 (cook), AAC LC, HE-AAC
	• This feature is available in certain countries only.	

Supported Audio Formats

File Format	Item	Info
.mp3	Bit rate	32 Kbps - 320 Kbps
	Sample freq.	16 kHz - 48 kHz
	Support	MPEG1, MPEG2
	Channels	mono, stereo
.wav	Sample freq.	~384 kHz
	Support	PCM
	Channels	mono, stereo
.ogg	Bit rate	64 Kbps - 500 Kbps
	Sample freq.	8 kHz - 48 kHz
	Support	Vorbis
	Channels	mono, stereo
.wma	Bit rate	- 1.5 Mbps
	Sample freq.	8 kHz - 192 kHz
	Support	WMA
	Channels	up to 6 ch

• The number of supported programs may vary depending upon the sample frequency.

Supported Photo Formats

File Format	Format	Resolution
.jpeg, .jpg, .jpe	JPEG	Minimum: 64 x 64 Maximum: 15360 (W) x 8640 (H) / Progressive Type: 1920 (W) x 1440 (H)
.png	PNG	Minimum: 64 x 64 Maximum: 5760 (W) x 5760 (H)
.bmp	BMP	Minimum: 64 x 64 Maximum: 1920 (W) x 1080 (H)
.jps	JPS	Minimum: 64 x 64
.mpo	MPO	Maximum: 15360 (W) x 8640 (H)

For 3D models

ENGLISH

Open Source Software Notice Information

To obtain the source code under GPL, LGPL, MPL, and other open source licenses, that is contained in this product, please visit *http://opensource.lge.com*.

In addition to the source code, all referred license terms, warranty disclaimers and copyright notices are available for download.

LG Electronics will also provide open source code to you on CD-ROM for a charge covering the cost of performing such distribution (such as the cost of media, shipping, and handling) upon email request to opensource@lge.com. This offer is valid for three (3) years from the date on which you purchased the product.

Troubleshooting

The software may be updated for improvement in performance. The customer is responsible to ensure the compatibility of their equipment with any LG Electronics software. If needed, please consult with LG Electronics and update new software versions according to the guidance provided by LG Electronics.

- Cannot control the TV with the remote control.
  - Check if anything such as tape has been placed over the receiver.
  - Check if there is any obstacle between the product and the remote control.
  - Replace the batteries with new fresh ones.
- No image display and no sound is produced.
  - Check if the product is turned on.
  - Check if the power cord is connected to a wall outlet.
  - Check if there is a problem in the wall outlet by connecting other products.
- The TV turns off suddenly.
  - Check the power control settings. The power supply may be interrupted.
  - Check if the **Timer Power Off** / **Sleep Timer** feature is activated in the **TIMERS** settings.
  - If there is no signal while the TV is on, the TV will turn off automatically after 15 minutes of inactivity.

Licenses

Supported licenses may differ by model. For more information about licenses, visit *www.lg.com*.

Manufactured under license from Dolby Laboratories.
Dolby and the double-D symbol are trademarks of Dolby Laboratories.

The terms HDMI and HDMI High-Definition Multimedia Interface, and the HDMI logo are trademarks or registered trademarks of HDMI Licensing LLC in the United States and other countries.

This DivX Certified® device has passed rigorous testing to ensure it plays DivX® video.

To play purchased DivX movies, first register your device at vod.divx.com. Find your registration code in the DivX VOD section of your device setup menu.

DivX Certified® to play DivX® video up to HD 1080p, including premium content.

DivX®, DivX Certified® and associated logos are trademarks of DivX, LLC and are used under license.

Covered by one or more of the following U.S. patents:

7,295,673; 7,460,668; 7,515,710; 7,519,274.

For DTS patents, see *http://patents.dts.com*. Manufactured under license from DTS Licensing Limited. DTS, DTS-HD, the Symbol, & DTS and the Symbol together are registered trademarks of DTS, Inc. © DTS, Inc. All Rights Reserved.

CHILD SAFETY:

PROPER TELEVISION PLACEMENT MATTERS



THE CONSUMER ELECTRONICS INDUSTRY CARES

- Manufacturers, retailers and the rest of the consumer electronics industry are committed to making home entertainment safe and enjoyable.
- As you enjoy your television, please note that all televisions – new and old- must be supported on proper stands or installed according to the manufacturer's recommendations. Televisions that are inappropriately situated on dressers, bookcases, shelves, desks, speakers, chests, carts, etc., may fall over, resulting in injury.



TUNE IN TO SAFETY

- **ALWAYS** follow the manufacturer's recommendations for the safe installation of your television.
- **ALWAYS** read and follow all instructions for proper use of your television.
- **NEVER** allow children to climb on or play on the television or the furniture on which the television is placed.
- **NEVER** place the television on furniture that can easily be used as steps, such as a chest of drawers.
- **ALWAYS** install the television where it cannot be pushed, pulled over or knocked down.
- **ALWAYS** route cords and cables connected to the television so that they cannot be tripped over, pulled or grabbed.



WALL OR CEILING MOUNT YOUR TELEVISION

- **ALWAYS** contact your retailer about professional installation if you have any doubts about your ability to safely mount your television.
- **ALWAYS** use a mount that has been recommended by the television manufacturer and has a safety certification by an independent laboratory (such as UL, CSA, ETL).
- **ALWAYS** follow all instructions supplied by the television and mount manufacturers.
- **ALWAYS** make sure that the wall or ceiling where you are mounting the television is appropriate. Some mounts are not designed to be mounted to walls and ceilings with steel studs or cinder block construction. If you are unsure, contact a professional installer.
- Televisions can be heavy. A minimum of two people is required for a wall or ceiling mount installation.



MOVING AN OLDER TELEVISION TO A NEW PLACE IN YOUR HOME

- Many new television buyers move their older CRT televisions into a secondary room after the purchase of a flat-panel television. Special care should be made in the placement of older CRT televisions.
- **ALWAYS** place your older CRT television on furniture that is sturdy and appropriate for its size and weight.
- **NEVER** place your older CRT television on a dresser where children may be tempted to use the drawers to climb.
- **ALWAYS** make sure your older CRT television does not hang over the edge of your furniture.

CE.org/safety

CEA
Consumer Electronics Association



Declaration of Conformity
Trade Name: LG
Model: 40/43/49/55/65LX770H-UA,
49/55/65/79UX970H-UA
Responsible Party: LG Electronics Inc.
Address: 1000 Sylvan Ave. Englewood Cliffs NJ 07632
U.S.A
TEL: 201-266-2534

The model and serial numbers of the TV are located on the back and on one side of the TV. Record them below should you ever need service.

MODEL _____

SERIAL _____

LG Customer Information Center

For inquires or comments, visit www.lg.com or call;

1-888-865-3026 USA, Commercial User

1-888-542-2623 CANADA