OWNER'S MANUAL

LG LED Signage

(VIDEO SWITCH)

Please read the safety information carefully before using this product.
After reading this manual, keep it in an easily accessible location for future reference.

SBAA-D05

www.lg.com

Copyright © 2025 LG Electronics Inc. All Rights Reserved.

TABLE OF CONTENTS

SAFETY PRECAUTIONS 3

- Precautions for the AC Adapter and Power 4
- Precautions for Moving the Product 6
- Precautions for Installing the Product 7
- Precautions for Cleaning the Product 9
- Precautions for Using the Product 10
- Product Disposal 12

ASSEMBLING AND PREPARING 13

- Essential Accessories 14
- Ports 15
- Rack Installation (Optional) 16
- IR Receiver 18

MAKING CONNECTIONS 19

- Connecting with Optic Cable / SFP+ Optic module 20
- Connecting with DP Cable 21

TROUBLESHOOTING 23

PRODUCT SPECIFICATIONS 24

WARNING - This equipment is compliant with Class A of CISPR 32. In a residential environment this equipment may cause radio interference.

SAFETY PRECAUTIONS

The safety precautions are intended to prevent unexpected danger or harm by helping the user to use the product safely and for its intended purpose.

⚠ WARNING

If you ignore the warning message, you may be seriously injured or there is a possibility of accident or death.

⚠ CAUTION

If you ignore the caution message, you may be slightly injured or the product may be damaged.

⚠ WARNING

- Indoor Use Only.

Precautions for the AC Adapter and Power

⚠ WARNING

- Use only the power cord or AC adapter provided or approved by LG Electronics, Inc. If you use another power cord, make sure that it is certified by the national standards. If the power cable is faulty in any way, please contact the manufacturer or the nearest authorised service centre for a replacement.
- Operate the display only from a power source(i.e. voltage) indicated in the product specification.
  - Otherwise the product can be damaged, fire can occur or you may be electrocuted. If you are not sure what type of power supply you have, consult a certified installation company.
- Make sure the power cord connect to a properly grounded outlet.
  - If you do not you may be electrocuted or injured or the product can be damaged.
- Insert the power plug or AC adapter firmly so it cannot come loose.
  - Poor connection may cause a fire or electric shock.
- In the presence of thunder and lightning, never touch the power cord and signal cable because it can be very dangerous.
  - It can cause electric shock.
- Be careful not to step or place heavy objects (electronic appliances, clothing, etc.) on the power cord or AC adapter. Additionally, do not bend or pull out the power cord or AC adapter with excessive force.
  - Damaged power cords may cause a fire or electric shock.
- Do not connect power cord or AC adapter damaged with sharp objects to power outlet.
  - You may be electrocuted.
- Do not insert a conductor (like a metal chopstick) into one end of the power cord while the other end is connected to the input terminal on the wall. Additionally, do not touch the power cord right after it is unplugged.
  - You may be electrocuted.
- Do not use with a multi-outlet connected by many electrical product and heating devices. Use an exclusive multi-outlet with a grounding terminal.
  - A fire can break out due to overheating.

- If water or any foreign substance goes inside the product, disconnect the power cord immediately and contact the service centre.
  - Otherwise, this may cause a fire or electric shock due to damage to the product.
- Keep the power cord or AC adapter away from any heating devices.
  - The cord coating may melt and cause fire or electric shock.
- Never disassemble, repair or modify the power cord or AC adapter.
  - This may cause a fire or electric shock.
- The main cutoff device is the power cord. Please make sure the product is installed near the wall outlet and that it is easily accessible.
- As long as this unit is connected to the AC wall outlet, it is not disconnected from the AC power source even if the unit is turned off.
- Power consumption will be '0' only when the power plug is unplugged.
- Use the appliance coupler as the disconnect device.

⚠ CAUTION

- If the outlet pins of the power plug or AC adapter is covered with dust, be sure to wipe them and keep them clean.
  - Overheating due to layers of dust may cause a fire or electric shock.
- If the outlet pins of the power plug or AC adapter is covered with water be sure to wipe them and keep them clean. Additionally, do not touch the power plug or AC adapter with wet hands.
  - This may cause an electric shock.
- Do not turn the product on or off by plugging in or unplugging the power plug from the power outlet. Do not use the power socket as a switch.
  - This may cause an electric shock or product malfunction.
- Do not unplug the power cord while the product is in use.
  - Electrical shock can damage the product.

Precautions for Moving the Product

⚠ WARNING

- Contact the service centre before moving the product.
  - It may cause electric shock and damage the product.
- Make sure the product is turned off, unplugged, and all cables have been removed before the product is moved.
  - You may be electrocuted or the product can be damaged.
- When moving the product, do not shock or cause an impact on the front panel.
  - You may be electrocuted or the product can be damaged.
- Use the correct number of people according to the weight of the product. (Under 25 Kg per person use lifting equipment when exceeding 100 Kg)
  - If use the damaged product again, contact the service centre because it can cause electric shock or fire.
- Do not hold it upside down while holding only the stand. (It is for stand supported models only.)
  - This may cause stand warping, panel damage and other types of product damage.

⚠ CAUTION

- Do not dispose of the product-packing box. Use it when moving by putting the product in the box to carry it.

Precautions for Installing the Product

⚠ WARNING

- Contact the service centre before installing the product.
  - It can cause electric shock and damage the product.
- Do not drop an object on or impact on the product. Keep out of reach of children and do not place toys or objects near the product to prevent throwing things on the product screen.
  - It can cause injury to human, problem to product and damage the display.
- Do not put heavy objects on, or hang from, the product.
  - If the product collapses or is dropped, you may be injured.
- Do not touch the surface of the product if it overheats.
  - It can cause injury to human.
- Install the product firmly fixed on a floor, wall, etc. to prepare against external impact such as wind and earthquake.
  - You must refer to the manual provided.
- Prevent Children from climbing or hanging on the product.
  - If the product collapses or is dropped, you may be injured.
- Do not install it where there are heating devices such as electrical heaters or lighting equipment.
  - Fire, electrical shock, malfunction may occur.
- Do not install this product by yourself as you may injure yourself or cause damage to the product. Please contact service engineer authorised by service centre.
- Do not install this product on a wall if it could be exposed to oil or oil mist.
  - This may damage the product and cause it to fall.
- Do not leave the power or signal cable, etc. on the pathway.
  - This could cause a trip or fall, which could cause an electrical shock, fire, product breakdown, or injury.
- Do not let the product drop when connecting it to an external device connected with a short cable.
  - This may cause injury and damage to the product.
- If you dropped the product or the case is broken, turn off the product and unplug the power cord and contact the service centre.
  - If you continue to use without taking proper measures, electrical shock or fire can occur.
- Install the product in a dry place where it is not near dust and water. Avoid high temperatures and humidity.
  - This may cause electrical shock, fire or product damage.
- Safely install the product in a place that can hold the weight of the product.
  - A lack of strength may cause the product to fall.
- Take a comfortable and natural position to relax the muscles when working with a product.

⚠ CAUTION

- Install the product where no Electromagnetic Interference occurs.
- If you install the product in a place that does not meet the recommended conditions, this may cause serious damage to the product's picture quality, life cycle, and appearance. Please check with service engineer before installing. Please do not install the product in places such as where there is an abundance of fine dust or oil mist, chemical substances are used, exposed to direct sunlight, the temperature is very high or low, the humidity is very high.
- Make sure the product is well ventilated by Installing at a distance (100 mm or more) from the wall.
  - If you install the product too close to the wall, it may be deformed or fire can break out due to internal heat buildup.
- Do not cover the product with a tablecloth or a curtain or other materials (e.g. plastic) while plugged in. Do not block the ventilation hole of the product.
  - The product can be deformed or fire can break out due to overheating inside the product.
- Do not install the product in an area with poor ventilation (e.g. on a bookshelf, in a closet) or outside and avoid placing on cushions or carpets.
  - The product could catch fire due to overheating inside the product.
- Install the product on a flat and stable place that is large enough to support the product.
  - If the product is dropped, you may be injured or the product may be broken.
- When installing the product on a shelf or cabinet, make sure that the bottom end of the product is not protruding forward.
  - The product may fall due to unbalanced centre of gravity, which may cause personal injury or damage to the product. Be sure to use cabinets or shelves that fit your product.

Precautions for Cleaning the Product

⚠ WARNING

- Keep the product clean at all times.
  - If you don't clean the unit for a long time and it becomes covered in dust, it can cause fire or product damage.
- When you need to clean the inside of the product, you must contact the service centre.
  - Otherwise, cleaning without support may cause a fire, electric shock, or damage to the product.
- When cleaning the product, unplug the power cord and wipe gently with a soft cloth to prevent scratching.
  - An electric shock may occur or damage to the screen if its scratched.
- Do not physically come in contact with the screen of the LED Package.
  - This may cause damage to the product.
- To clean the product, use an air gun to lightly remove dust from the front frame and the screen.
  - If there are foreign substances in between the LEDs on the screen, it may cause a defect on the screen.

⚠ CAUTION

- When cleaning the product or the screen, unplug the power cord and wipe it gently with a soft cloth. Do not spray water or other liquids directly on the product. Especially, do not clean your product with chemicals including glass cleaner, any type of air freshener, insecticide, lubricants, wax (car, industrial), abrasive, thinner, benzene, alcohol, etc., which can damage the product or its panel.
  - This may result in fire, electric shock or product damage (deformation, corrosion or breakage).

Precautions for Using the Product

⚠ WARNING

- Do not use the product in any environment with excessively high temperatures or humidity.
  - It may cause electrical shock or damage the product.
- If you use the product for a long period of time, take a rest from time to time to protect your vision.
  - Extended viewing could result in impaired vision.
- Listening at high volume or using for a long time can cause damage to your hearing.
- In the event that liquid or a foreign object falls into the product, please switch it off and unplug it from the wall outlet and contact the service centre.
  - Otherwise, the product may cause fire or electric shock.
- In the event that no image appears on the screen or no sound is heard, stop using the product. Switch it off immediately, unplug it from the power outlet and contact the service centre.
  - Otherwise, the product may cause fire or electric shock.
- Do not drop an object or impact on the product or screen.
  - It can cause injury to human, problem to product and damage the screen.
- If you can smell smoke or other odors or hear a strange sound, unplug the power cord and contact the service centre.
  - If you continue to use the product without taking proper measures, it may cause electrical shock or fire.
- Do not attempt to disassemble, repair or modify the product yourself. Please contact service centre if you need to repair it.
  - Fire or electric shock can occur.
- Do not place objects filled with liquids such as vases, cups etc. on or over the product to prevent liquid from entering the product.
  - Failure to do so may result in fire, electric shock, malfunction or deformation.
- Do not push hard on or scratch the product's surface with your hands or sharp objects, such as nails, pencils or pens. Do not shock or scratch the front and sides of the screen with metallic objects.
  - This may damage the products and cause it to malfunction.
- Do not touch the product if it has been exposed to sunlight or an intense light because it could be hot.

- Do not use high voltage electrical goods near the product (e.g., a bug zapper).
  - This may result in product malfunction if it receives an electrical shock.
- If there is a gas leak, do not touch the outlet, and open the windows for ventilation.
  - Otherwise, the product may cause fire or electric shock.
- If you dropped the product or the case is broken, turn off the product and unplug the power cord.
  - If you continue to use without taking proper measures, electrical shock or fire can occur. Contact the service centre.
- Keep small accessories out of the reach of children.
  - If a child swallows it, consult a doctor immediately.
- Keep out of reach of children from the product. Also, do not throw toys or objects to the product or screen.
  - It can cause injury to human, problem to product and damage the screen.
- All the power sources must be disconnected by removing the power cables to remove all power from the unit.

⚠ CAUTION

- This panel is an advanced product that contains millions of pixels. You may occasionally see pixel spots when viewing the screen. Since these deactivated pixels are not a defect, the performance and reliability of the product is not affected.
- Do not put or store inflammable substances near the product.
  - There is a danger of explosion or fire.
- Keep the proper distance from the product.
  - It can cause damage to your vision if you look at the product too closely.
- Set the appropriate resolution and frequency by products.
  - It can cause damage to your vision.
- Take a regular break when working with the product for a long time.

Product Disposal

- Do not dispose of this product with general household waste.
- Disposal of this product must be carried out in accordance to the regulations of your local authority.

ASSEMBLING AND PREPARING

⚠ CAUTION

- Always use genuine components to ensure safety and durability of the product.
- The product warranty will not cover damage or injury caused by the use of unauthorised components.

NOTE

- The accessories provided with your product may vary depending on the model.
- Product specifications or contents in this manual may be changed without prior notice due to upgrade of product functions.
- The warranty will not cover any damage caused by using the product in an excessively dusty environment.

Essential Accessories

Essential accessories are subject to change or to be added without prior notices to improve the performance of the product.

The images of the product in this manual are to aid comprehension and may differ from the actual appearance.

LED Screen

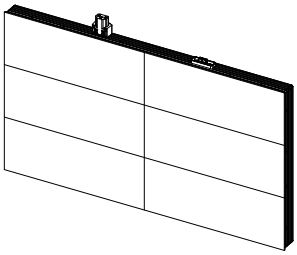

LSMA*, LMPA*, LMPB*

System Controller

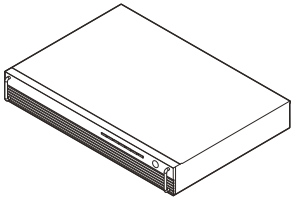

CEAA, CEAB, CEAC

NOTE

- Essential accessories are only available for some models. If necessary, please purchase them separately.

Ports

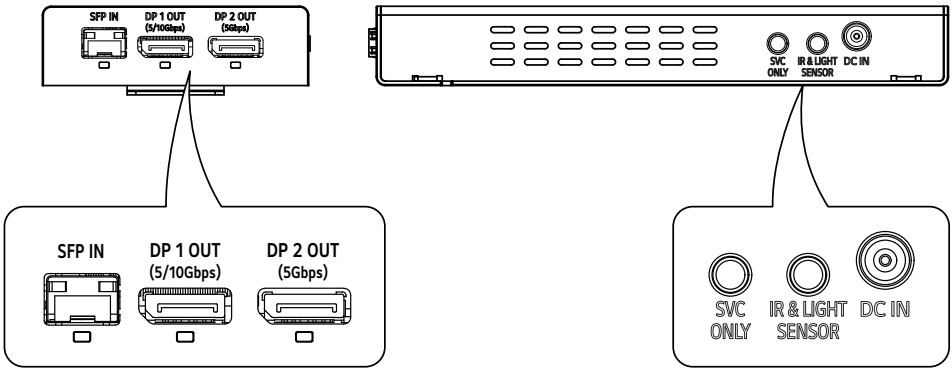
SFP IN
DP 1 OUT
(5/10Gbps)
DP 2 OUT
(5Gbps)
SVC ONLY
IR & LIGHT SENSOR
DC IN

Rack Installation (Optional)

1)

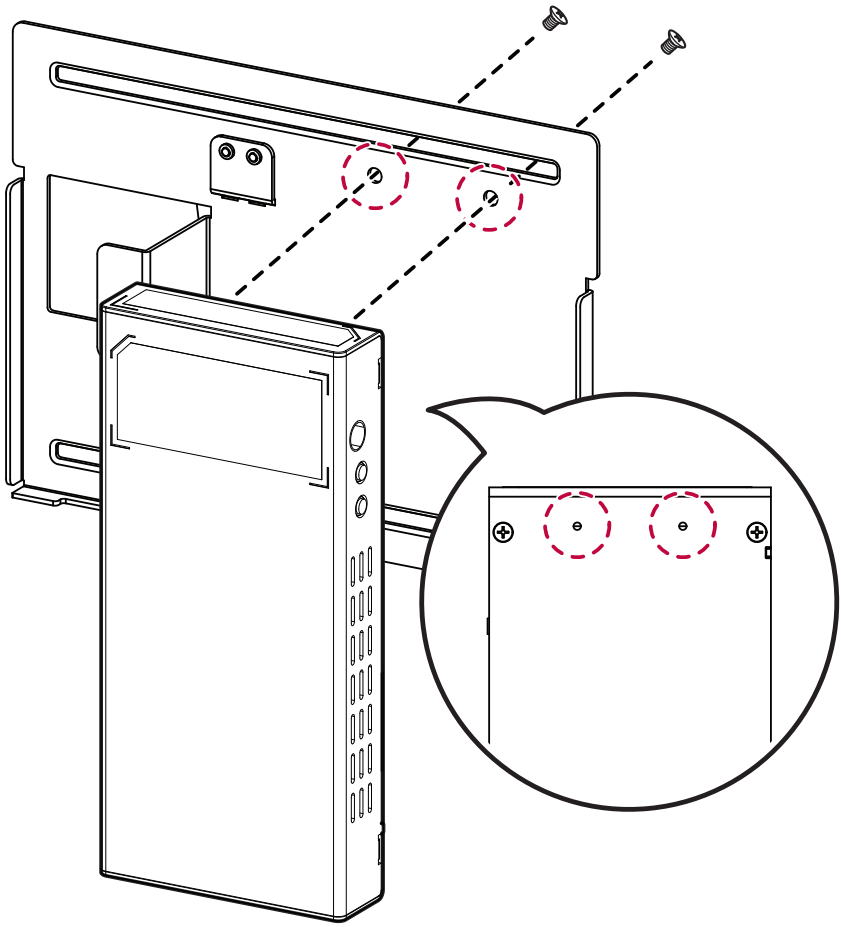

NOTE

- Use the included screws to assemble the bracket and product.

2)

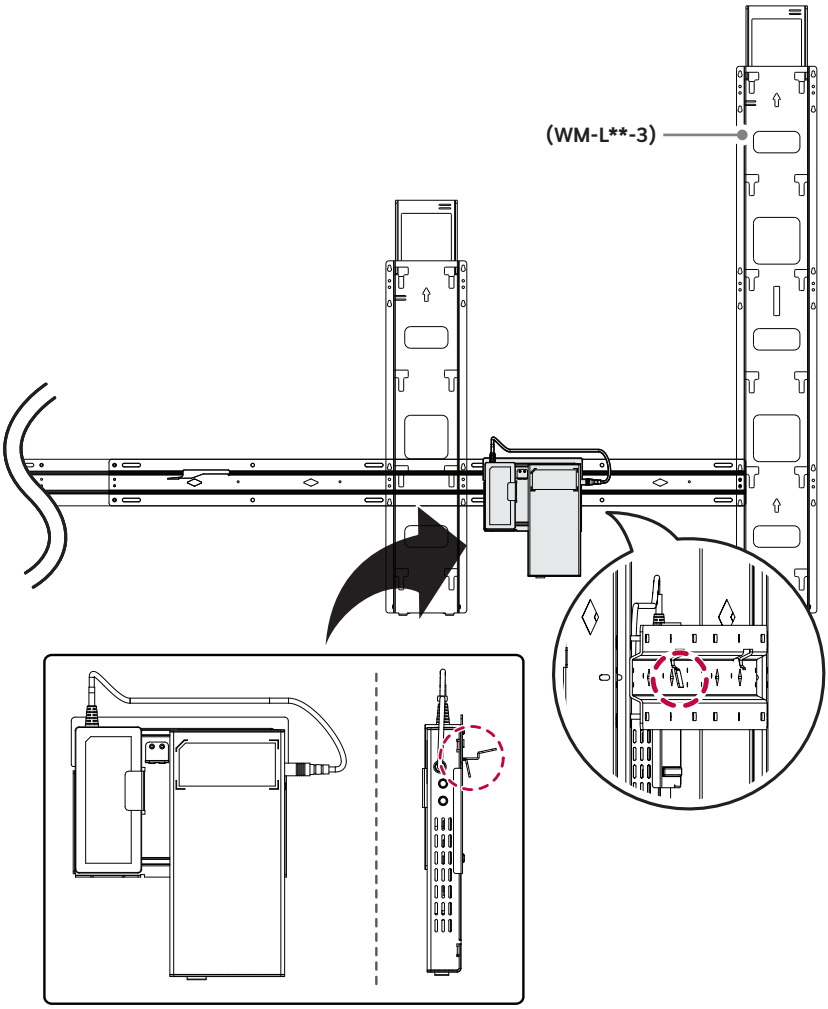

IR Receiver

This allows a remote control sensor to be placed in a custom location. All products can receive signals normally after the infrared receiver terminal (IR & LIGHT SENSOR) is connected to the IR.

*** SETTINGS / ⚙ > [General] > [Power] > [PM Mode] > [Network Ready]**

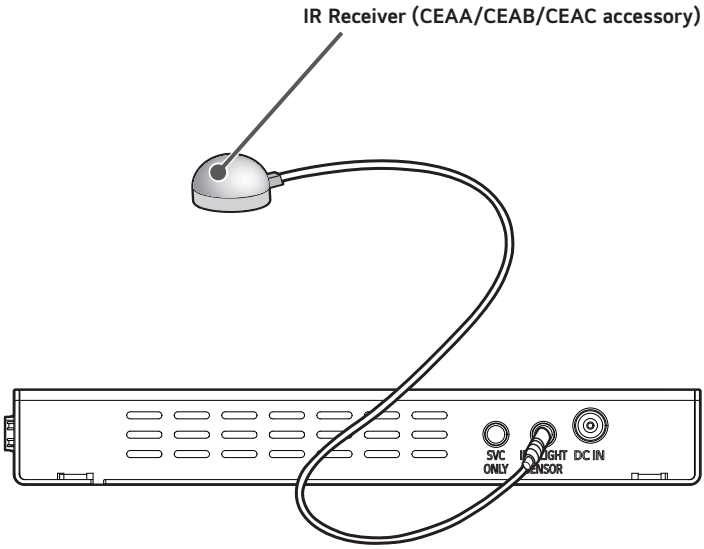

MAKING CONNECTIONS

Essential Connection Products

System controller	Video Switch	LED screen
CEAA,CEAB, CEAC	SBAA-D05	LSMA*, LMPA*, LMPB*

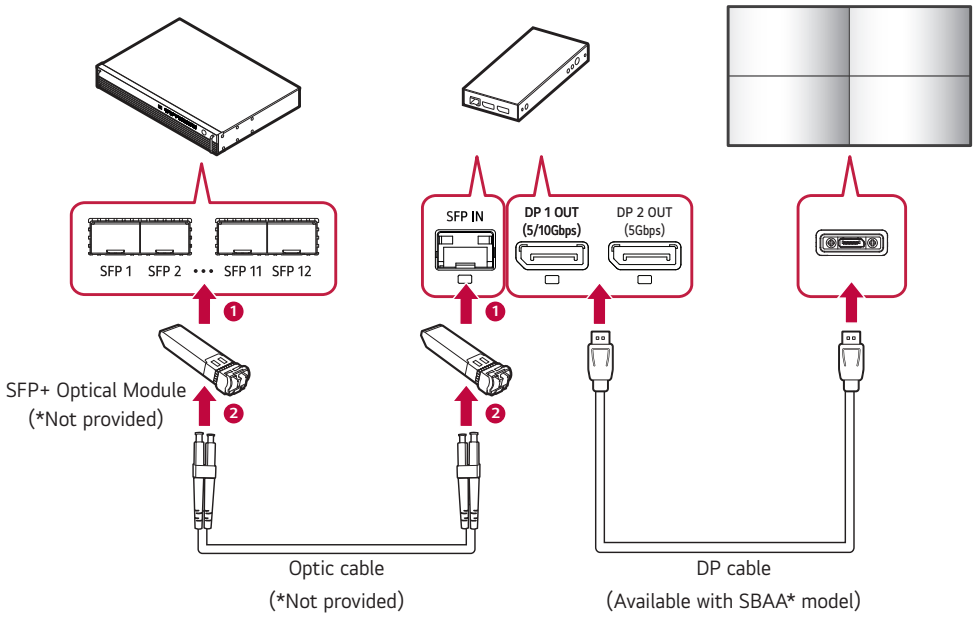

Connecting with Optic Cable / SFP+ Optic module

1) Insert the SFP+ Optic module to the set.
2) Connect the Optic Cable to the set.

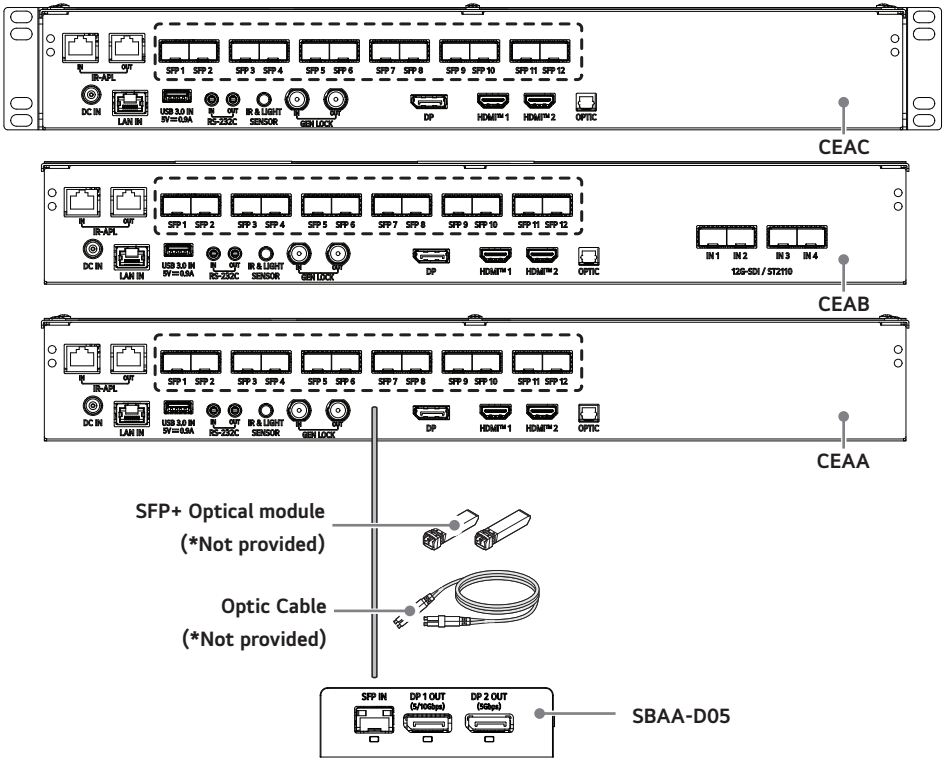

NOTE

- The Video Switch model itself does not have any screen. The screen can be viewed when connected to an LED screen model.
- For SFP+ optical modules, LC-type connectors with a maximum rate of 10 Gbps are recommended.
- When using LR-type SFP+ optical modules, use a single-mode Optic cable (yellow/LC-type connector).
- When using SR-type SFP+ optical modules, use a multi-mode Optic cable (sky blue/LC-type connector).
- When using SFP+ optical modules with RJ45 connectors, use a CAT7 cable.
  (* Recommended SFP+ modules: 10 G SFP+ optical modules from Intel/Molex)

CAUTION

- Please check the direction to prevent damage to the SFP+ optical module/optic cable.
- Inserting the SFP+ optical module/optic cable with excessive force may damage the connection point.

Connecting with DP Cable

⚠ CAUTION

- Do not connect the DP cable to any device other than the LED Screen.

Connect the DP cable with the set. (10 G x 1 port)

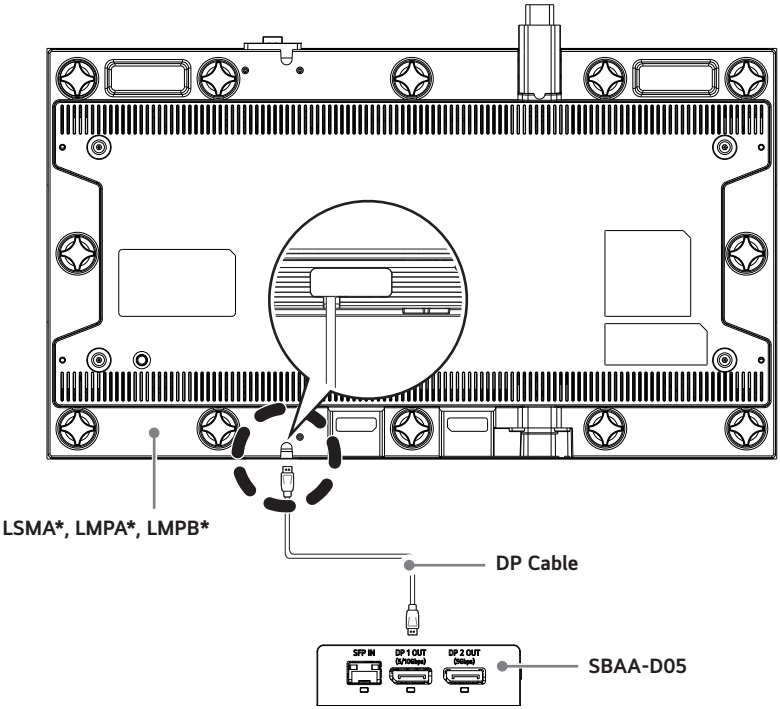

Connect the DP cable with the set. (5 G x 2 port)

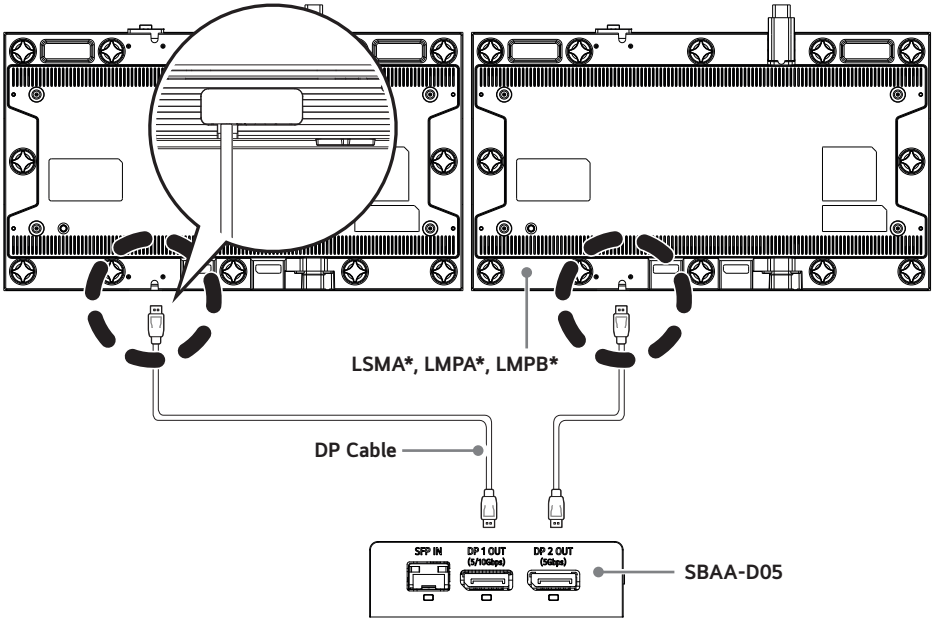

⚠ CAUTION

- Check the direction of the Optical cable/DP cable to avoid damaging it.
- Excessive force when inserting an Optical cable/DP cable may damage the junction.
- Frame Rate : 60Hz, Bit Depth : 10 bit (YCbCr 4:4:4) based.
  - The SBAA-D05 can output up to 4,273,500 pixels in resolution.
  - When using two DP outputs on the SBAA-D05, the maximum video resolution per DP port is 2,136,750 pixels.
  - When using a single DP output on the SBAA-D05, the maximum video resolution per DP port is 4,273,500 pixels.

TROUBLESHOOTING

No image is displayed.

- Is the power cord connected to the product?
  - Check if the power cord is correctly plugged into the power outlet.

The 'Unknown Product' message appears when the product is connected.

- Did you install the driver?
  - Check if the Plug and Play function is supported by referring to the graphics card user manual.

The screen image looks abnormal.

- Is the screen position wrong?
  - Check if the graphics card resolution and frequency are supported by the product. If the frequency is out of range, set to the recommended resolution in the "Display" settings in Control Panel.
- The screen is displayed abnormally.
  - The proper input source is not connected to the port. Connect a cable that matches the input source signal.

The display colour is abnormal.

- Screen has poor colour resolution (16 colours).
  - Set the colour depth to more than 24 bits (true colour). To do this, select (Control Panel) → (Display) → (Setting) → (Colour Palette) on Windows. (May differ depending on your operating system (OS).)
- Screen colour is unstable or mono-coloured.
  - Check the connection status of the signal cable. Or, re-insert the PC graphics card.

The operation does not work normally.

- The power suddenly turned off.
  - Is the Timer set?
  - Check the power control settings. Power supply is interrupted.

PRODUCT SPECIFICATIONS

Without prior notice, all product information and specifications contained in this manual are subject to change to improve the performance of the product.

The ~ symbol means alternating current, and the symbol ⎓ means direct current.

Input/Output Ports		SFP IN, DP 1 OUT, DP 2 OUT, IR & LIGHT SENSOR, DC IN, SVC ONLY
Power	Rating Voltage	19 V ⎓ 0.63 A
Environmental Conditions	Operating Temperature	0 °C to 40 °C
	Operating Humidity	10 % to 80 %
	Storage Temperature	-20 °C to 60 °C
	Storage Humidity	5 % to 85 %
Dimensions (Width x Depth x Height) / Weight		90.7 mm x 197.5 mm x 27 mm / 0.4 kg

[Unit: mm]

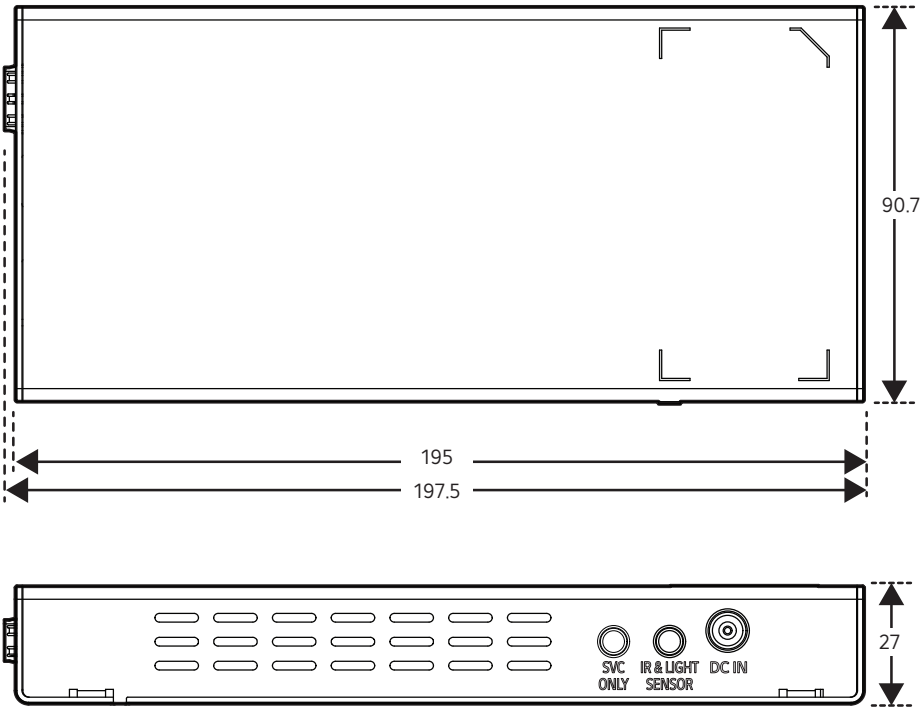



The model and serial number of the product are located on the front and on one side of the product. Record them below in case you ever need service.

MODEL

SERIAL NO.

Temporary noise is normal when powering ON or OFF this device.