LG

MFL05758203250 4REV01

55QNED91*A 55QNED92*A
65QNED91*A 65QNED92*A
75QNED91*A 75QNED92*A
85QNED91*A 85QNED92*A

www.lg.com

Printed in Korea
Imprimé en Corée

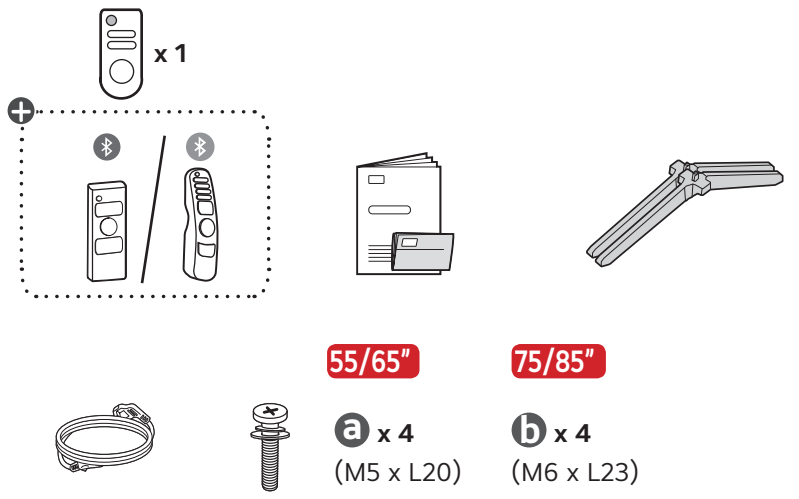

55"

1

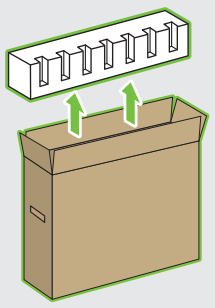

65/75/85"

1

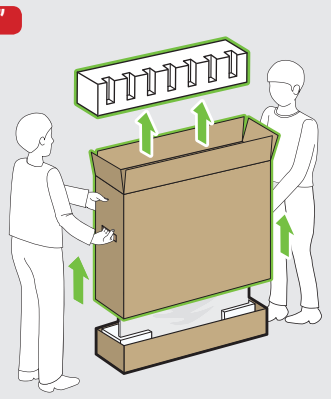

55/65/75/85"

2

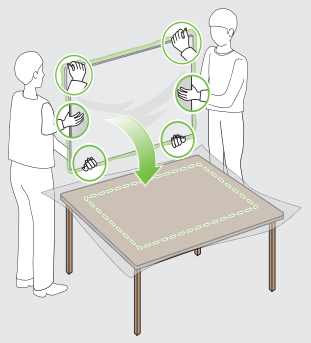

3

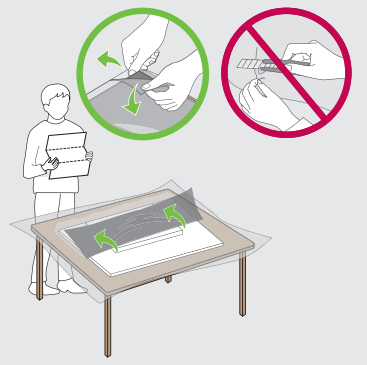

1

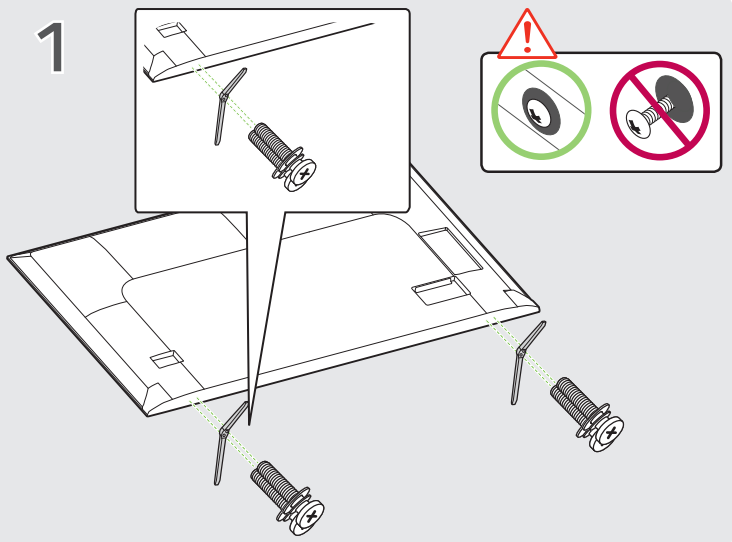

2

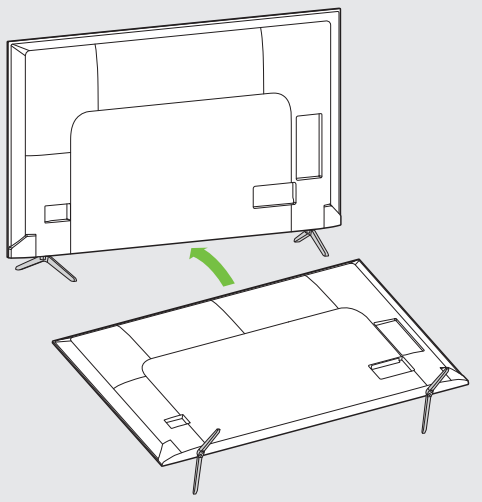

3

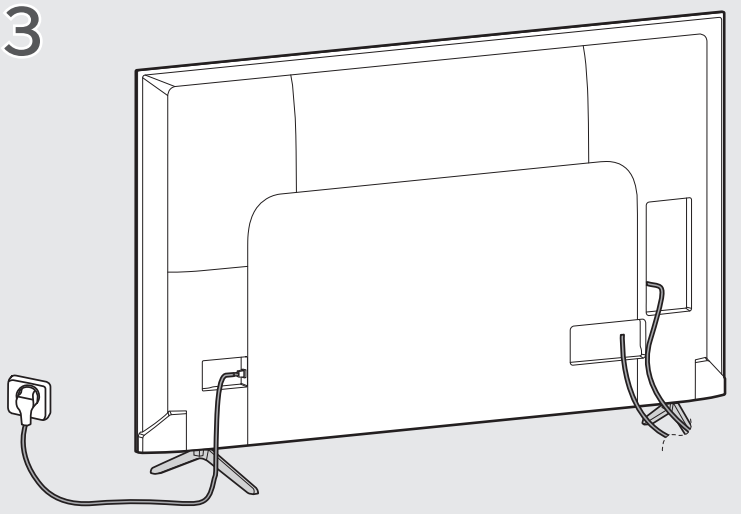

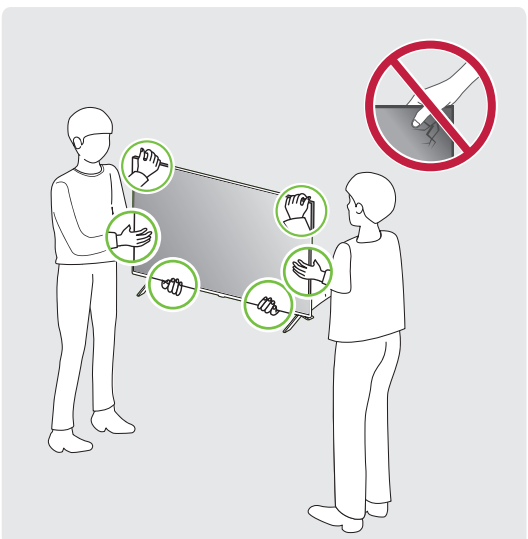

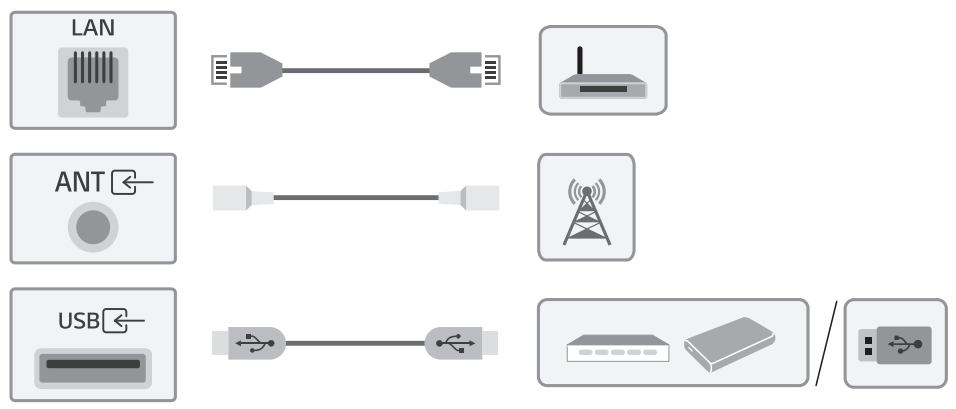

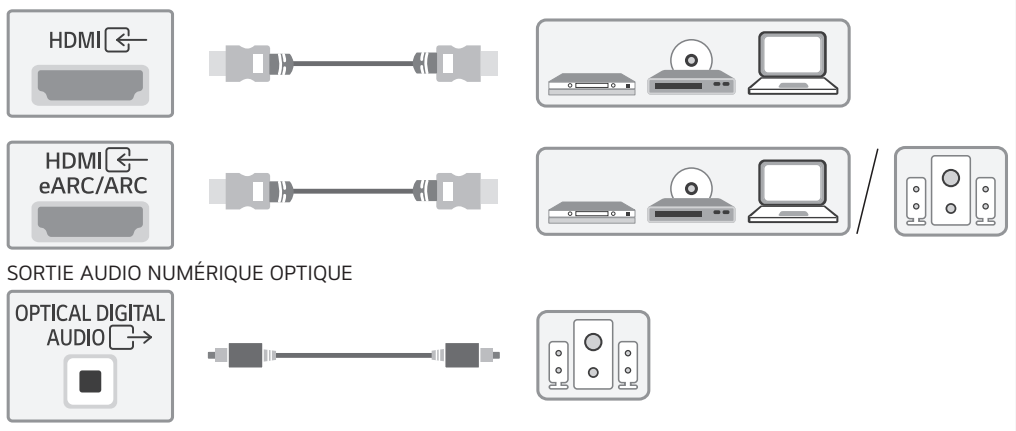

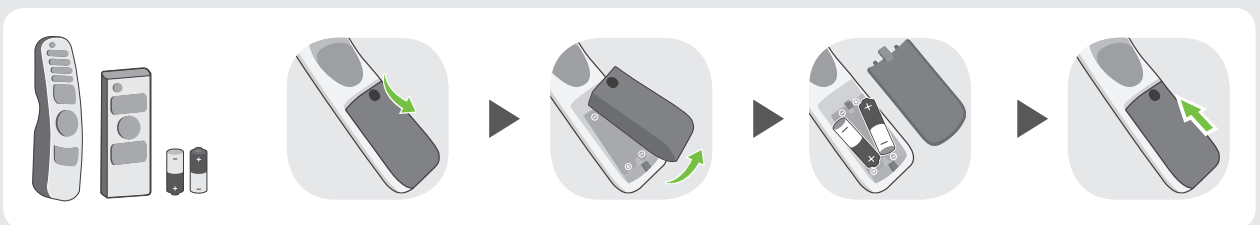

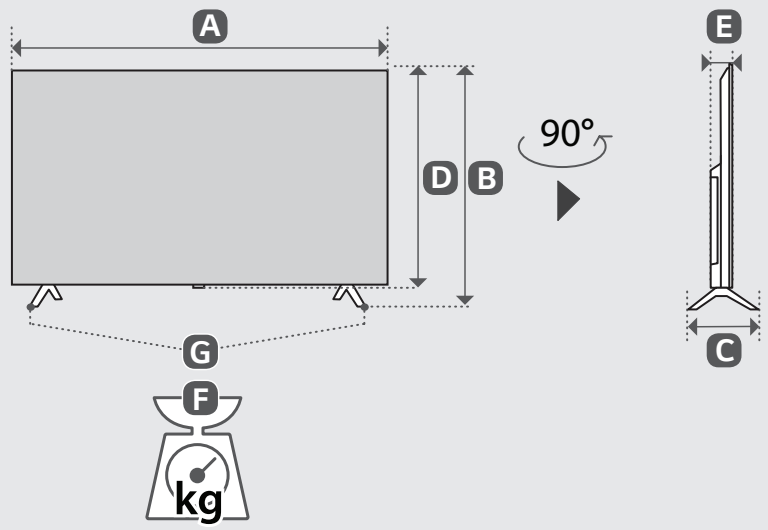

mm (inches / pulgadas / po / pol.)
kg (lbs / libras / lb)

	A	B	C	D	E	F	F - G	
55QNED91*A	1 226 mm (48.2) inches	776 mm (30.5) inches	317 mm (12.4) inches	709 mm (27.9) inches	57.9 mm (2.2) inches	12.3 kg (27.1) lbs	11.9 kg (26.2) lbs	240 W
55QNED92*A	1 226 mm (48.2) inches	775 mm (30.5) inches	319 mm (12.5) inches	709 mm (27.9) inches	57.9 mm (2.2) inches	12.9 kg (28.4) lbs	12.5 kg (27.5) lbs	240 W
65QNED91*A	1 445 mm (56.8) inches	903 mm (35.5) inches	337 mm (13.2) inches	830 mm (32.6) inches	58.5 mm (2.3) inches	18.1 kg (39.9) lbs	17.6 kg (38.8) lbs	300 W
65QNED92*A	1 445 mm (56.8) inches	904 mm (35.5) inches	339 mm (13.3) inches	830 mm (32.6) inches	58.5 mm (2.3) inches	19.0 kg (41.8) lbs	18.5 kg (40.7) lbs	320 W
75QNED91*A	1 667 mm (65.6) inches	1 028 mm (40.4) inches	390 mm (15.3) inches	955 mm (37.5) inches	58.8 mm (2.3) inches	24.7 kg (54.4) lbs	24.1 kg (53.1) lbs	350 W
75QNED92*A	1 667 mm (65.6) inches	1 028 mm (40.4) inches	392 mm (15.4) inches	955 mm (37.5) inches	58.8 mm (2.3) inches	26.3 kg (57.9) lbs	25.7 kg (56.6) lbs	380 W
85QNED91*A	1 890 mm (74.4) inches	1 180 mm (46.4) inches	448 mm (17.6) inches	1 081 mm (42.5) inches	59.9 mm (2.3) inches	32.8 kg (72.3) lbs	31.6 kg (69.6) lbs	430 W
85QNED92*A	1 890 mm (74.4) inches	1 180 mm (46.4) inches	450 mm (17.7) inches	1 081 mm (42.5) inches	59.9 mm (2.3) inches	35.2 kg (77.6) lbs	34.0 kg (74.9) lbs	450 W

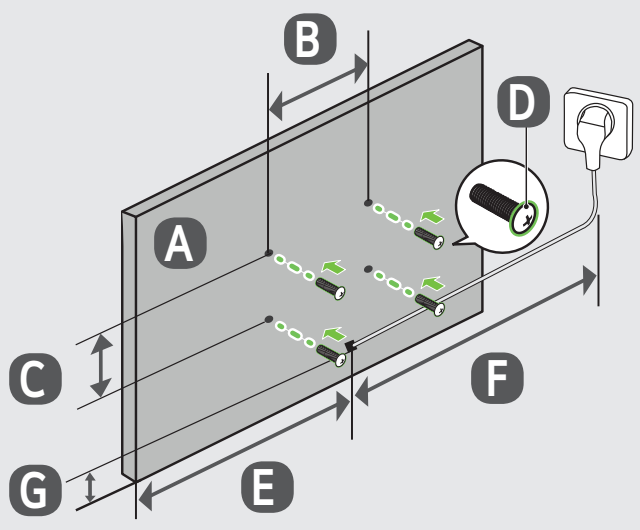

* : 0~9, A~Z
mm (inches / pulgadas / po / pol.)
kg (lbs / libras / lb)

A	B x C	D	E	F	G
55QNED91*A	300 x 300 mm (11.8 x 11.8) inches	M6	233 mm (9.1) inches	≧1.5 m (59.0) inches	152 mm (5.9) inches
55QNED92*A					
65QNED91*A	400 x 300 mm (15.7 x 11.8) inches		239 mm (9.4) inches		162 mm (6.3) inches
65QNED92*A					
75QNED91*A			245 mm (9.6) inches		198 mm (7.7) inches
75QNED92*A					
85QNED91*A	600 x 400 mm (23.6 x 15.7) inches	M8	243 mm (9.5) inches		237 mm (9.3) inches
85QNED92*A					