ENGLISH

INSTALLATION MANUAL

AIR CONDITIONER

Please read this installation manual completely before installing the product.
Installation work must be performed in accordance with the national wiring standards by authorized personnel only.
Please retain this installation manual for future reference after reading it thoroughly.

Ceiling Cassette – 4Way

P/NO : MFL65920802

www.lg.com

TABLE OF CONTENTS

Installation Requirements	*Required Parts*	*Required Tools*
Installation Parts 3		
Safety Precautions.....4		
Installation	❑ Installation guide map ❑ Four type "A" screws & plastic anchors ❑ Connecting cable	❑ Level gauge ❑ Screw driver ❑ Electric drill ❑ Hole core drill ❑ Horizontal meter
Selection of the best location..6		
Ceiling dimension and hanging bolt location 7	❑ Pipes: Gas side Liquid side (Refer to Product Data) ❑ Insulation materials ❑ Additional drain pipe	❑ Flaring tool set ❑ Specified torque wrenches (different depending on model No.) ❑ Spanner .....Half union
Wiring Connection 8		
Installation of Decoration Panel 10		
Drain Piping.....11		
Ceiling Height Selection 12		
Dip Switch Setting 13		❑ Hexagonal wrench ❑ Gas-leak detector ❑ Vacuum pump ❑ Gauge manifold
Group Control Setting.....14		
Airborne Noise Emission.....19		
Limiting concentration 19		❑ Owner's manual ❑ Thermometer

Installation Parts

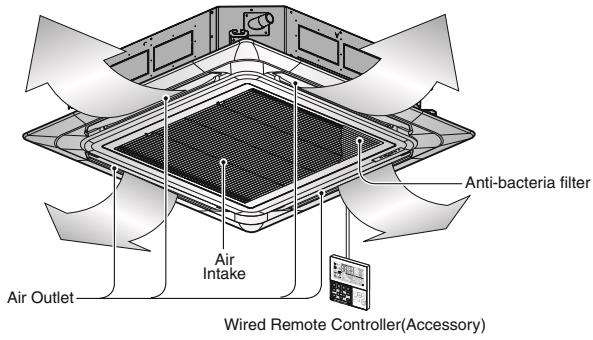

Installation Tool

Name	Drain hose	Clamp metal	Washer for hanging backet	Clamp (Tie Wrap)	Insulation for fitting	(Other)
Quantity	1 EA	2 EA	8 EA	4 EA	1 SET	
Shape					 for gas pipe  for liquid pipe	• Paper pattern for installation • Owner's manual • Installation manual

• Screws for fixing panels are attached to decoration panel.

Safety Precautions

To prevent injury to the user or other people and property damage, the following instructions must be followed.
- Be sure to read before installing the air conditioner.
- Be sure to observe the cautions specified here as they include important items related to safety.
- Incorrect operation due to ignoring instruction will cause harm or damage. The seriousness is classified by the following indications.

⚠WARNING	This symbol indicates the possibility of death or serious injury.
⚠CAUTION	This symbol indicates the possibility of injury or damage to properties only.

■ Meanings of symbols used in this manual are as shown below.

	**Be sure not to do.**
	**Be sure to follow the instruction.**

⚠WARNING

■ Installation

Do not use a defective or underrated circuit breaker. Use this appliance on a dedicated circuit.

- There is risk of fire or electric shock.

For electrical work, contact the dealer, seller, a qualified electrician, or an Authorized Service Center.

- Do not disassemble or repair the product. There is risk of fire or electric shock.

Always ground the product.

- There is risk of fire or electric shock.

Install the panel and the cover of control box securely.

- There is risk of fire or electric shock.

Always install a dedicated circuit and breaker.

- Improper wiring or installation may cause fire or electric shock.

Use the correctly rated breaker or fuse.

- There is risk of fire or electric shock.

Do not modify or extend the power cable.

- There is risk of fire or electric shock.

Do not let the air conditioner run for a long time when the humidity is very high and a door or a window is left open.

- Moisture may condense and wet or damage furniture.

Be cautious when unpacking and installing the product.

- Sharp edges could cause injury. Be especially careful of the case edges and the fins on the condenser and evaporator.

For installation, always contact the dealer or an Authorized Service Center.

- There is risk of fire, electric shock, explosion, or injury.

Do not install the product on a defective installation stand.

- It may cause injury, accident, or damage to the product.

Be sure the installation area does not deteriorate with age.

- If the base collapses, the air conditioner could fall with it, causing property damage, product failure, and personal injury.

Use a vacuum pump or inert (nitrogen) gas when doing leakage test or air purge. Do not compress air or oxygen, and do not use flammable gases. Otherwise, it may cause fire or explosion.

- There is the risk of death, injury, fire or explosion.

Do not turn on the breaker or power under condition that front panel, cabinet, top cover, control box cover are removed or opened.

- Otherwise, it may cause fire, electric shock, explosion or death.

■ Operation

Do not store or use flammable gas or combustibles near the product.

- There is risk of fire or failure of product.

⚠CAUTION

■ Installation

Always check for gas (refrigerant) leakage after installation or repair of product.

- Low refrigerant levels may cause failure of product.

Install the drain hose to ensure that water is drained away properly.

- A bad connection may cause water leakage.

Keep level even when installing the product.

- To avoid vibration or water leakage.

Use two or more people to lift and transport the product.

- Avoid personal injury.

Installation

Read completely, then follow step by step.

Selection of the best location

- There should not be any heat source or steam near the unit.
- There should not be any obstacles to the air circulation.
- A place where air circulation in the room will be good.
- A place where drainage can be easily obtained.
- A place where noise prevention is taken into consideration.
- Do not install the unit near the door way.
- Ensure the spaces indicated by arrows from the wall, ceiling, or other obstacles.
- The indoor unit must have the maintenance space.

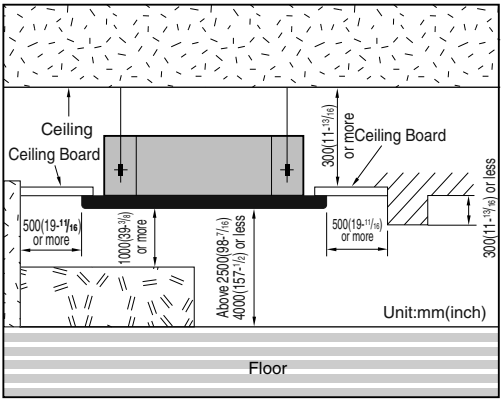

CAUTION : In case that the unit is installed near the sea, the installation parts may be corroded by salt. The installation parts (and the unit) should be taken appropriate anti-corrosion measures.

Ceiling dimension and hanging bolt location

• The dimensions of the paper model for installation are the same as those of the ceiling opening dimensions.

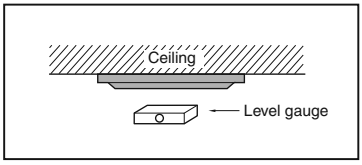

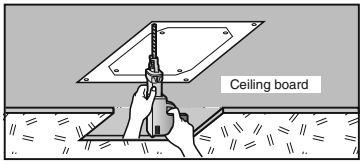

TQ/TR Chassis

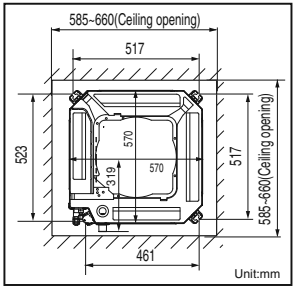

TM/TN/TP Chassis

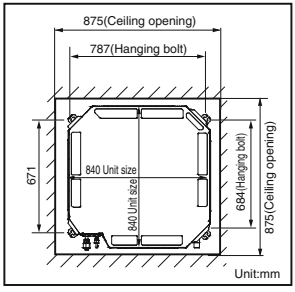

CAUTION :

- **This air-conditioner uses a drain pump.**
- **Install the unit horizontally using a level gauge.**
- **During the installation, care should be taken not to damage electric wires.**

- Select and mark the position for fixing bolts and piping hole.
- Decide the position for fixing bolts slightly tilted to the drain direction after considering the direction of drain hose.
- Drill the hole for anchor bolt on the wall.

NOTICE

• Avoid the following installation location.

1. Such places as restaurants and kitchen where considerable amount of oil steam and flour is generated.
   These may cause heat exchange efficiency reduction, or water drops, drain pump mal-function.
   In these cases, take the following actions;
   - Make sure that ventilation fan is enough to cover all noxious gases from this place.
   - Ensure enough distance from the cooking room to install the air conditioner in such a place where it may not suck oily steam.
2. Avoid installng air conditioner in such places where cooking oil or iron powder is generated.
3. Avoid places where inflammable gas is generated.
4. Avoid place where noxious gas is generated.
5. Avoid places near high frequency generators.

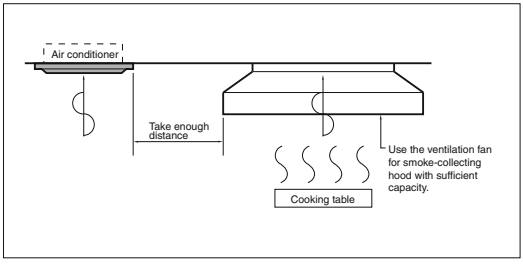

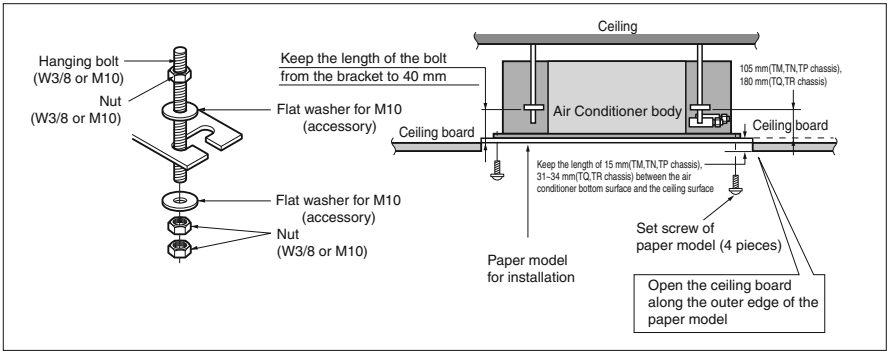

- The following parts are local purchasing.

① Hanging Bolt - W 3/8 or M10
② Nut - W 3/8 or M10
③ Spring Washer - M10
④ Plate Washer - M10

CAUTION : Tighten the nut and bolt to prevent the unit from falling.

Wiring Connection

- Connect the wires to the terminals on the control box individually according to the outdoor unit connection.
- Ensure that the color of the wires of outdoor unit and the terminal No. are the same as those of indoor unit respectively.

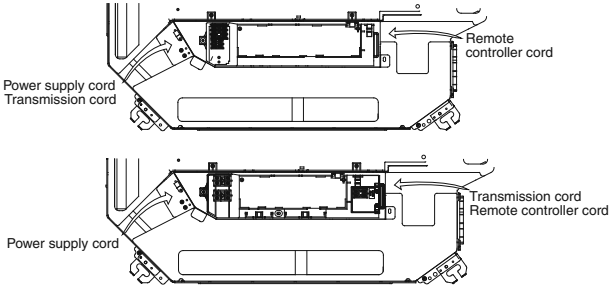

- While connecting wired remote controller, insert its connector to the "CN-REMO" housing of the main PCBA and make the remote controller cord tightly by using clamp cord.

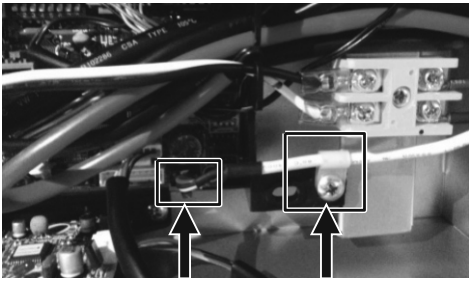

• **TM/TN/TP Chassis**

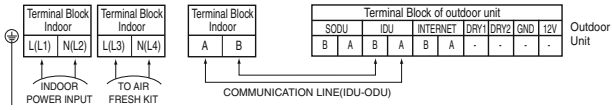

WARNING : Make sure that the screws of the terminal are free from looseness.

CAUTION : The Power cord connected to the unit should be selected according to the following specifications.

CAUTION:

After the confirmation of the above conditions, prepare the wiring as follows:

1) Never fail to have separate power specially for the air conditioner. As for the method of wiring, follow the circuit diagram pasted on the inside of control box cover.

2) Provide a circuit breaker switch between power source and the unit.

3) The screw which fasten the wiring in the casing of electrical fittings are liable to come loose from vibrations to which the unit is subjected during the course of transportation. Check them and make sure that they are all tightly fastened. (If they are loose, it could give rise to burn-out of the wires.)

4) Confirm the Specification of power source

5) Confirm that electrical capacity is sufficient.

6) Be sure that the starting voltage is maintained at more than 90 % of the rated voltage marked on the name plate.

7) Confirm that the cable thickness is as specified in the power sources specification. (Particularly note the relation between cable length and thickness.)

8) Do not install the leakage breaker in a place which is wet or moist. Water or moist may cause short circuit.

9) The following troubles would be caused by voltage drop-down.

- Vibration of a magnetic switch, damage on the contact point there of, fuse breaking, disturbance to the normal function of a overload protection device.
- Proper starting power is not given to the compressor.

HAND OVER

Teach the customer the operation and maintenance procedures, using the operation manual.
(air filter cleaning, temperature control, etc.)

Installation of Decoration Panel

The decoration panel has its installation direction.

Before installing the decoration panel, always remove the paper template.

1. Temporarily fix two decoration panel fixing screws (hexagon M5 screw) on the unit body. (Tighten by amount 10 mm in length.)
   The fixing screws (hexagon M5 screw) are included the indoor unit box.
2. Remove the air inlet grille from the decoration panel. (Remove the hook for the air inlet grille cord.)
3. Hook the decoration panel key hole (⊂⊃) on the screws fixed in step above, and slide the panel so that the screws reach the key hole edge.
4. Retighten completely two temporarily fixed screws and other two screws. (Total 4 screws)
5. Connect the louver motor connector and display connector.
6. After tightening these screws, install the air inlet grille (including the air filter).

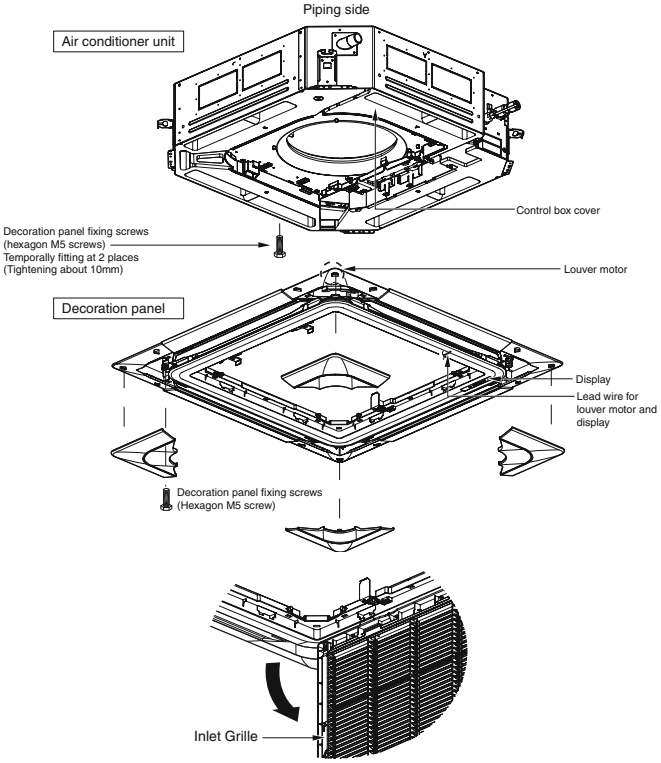

CAUTION : Install certainly the decoration panel. Cool air leakage causes sweating. ⇨ Water drops fall.

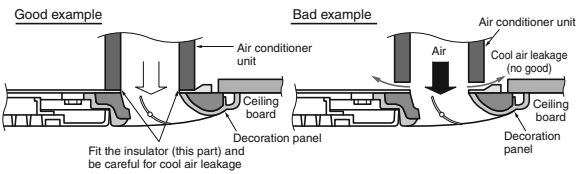

Drain Piping

- Drain piping must have down-slope (1/50 to 1/100): be sure not to provide up-and-down slope to prevent reversal flow.
- During drain piping connection, be careful not to exert extra force on the drain port on the indoor unit.
- The outside diameter of the drain connection on the indoor unit is 32 mm.

Piping material: Polyvinyl chloride pipe VP-25 and pipe fittings

- Be sure to install heat insulation on the drain piping.

Heat insulation material: Polyethylene foam with thickness more than 8 mm.

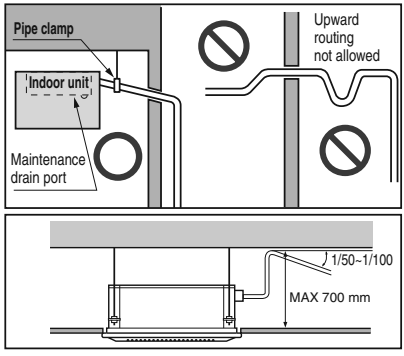

Drain test

The air conditioner uses a drain pump to drain water.
Use the following procedure to test the drain pump operation:

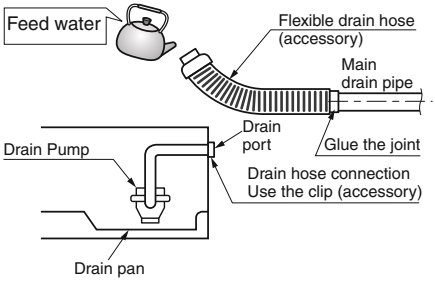

- Connect the main drain pipe to the exterior and leave it provisionally until the test comes to an end.
- Feed water to the flexible drain hose and check the piping for leakage.
- Be sure to check the drain pump for normal operating and noise when electrical wiring is complete.
- When the test is complete, connect the flexible drain hose to the drain port on the indoor unit.

CAUTION : The supplied flexible drain hose should not be curved, neither screwed. The curved or screwed hose may cause a leakage of water.

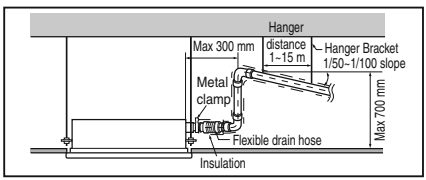

Attention

1. Possible drain-head height is up to 700 mm. So, it must be installed below 700 mm.

2. Keep the drain hose downward up to 1/50~1/100 inclination.
   Prevent any upward flow or reverse flow in any part.

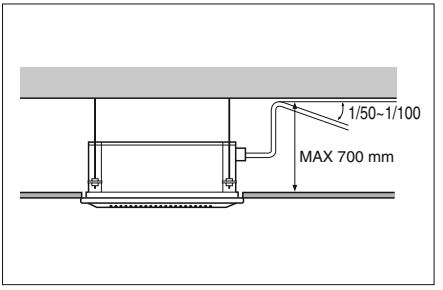

3. 5 mm or thicker formed thermal insulator is provided for the drain pipe.

4. Upward routing is not allowed.

5. Be sure to check the drain pump for normal operation and abnormal noise when electrical wiring is complete.

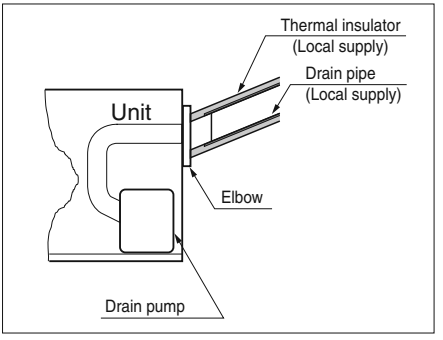

Ceiling Height Selection

The ceiling type indoor unit is available to adjust indoor airflow rate by Installer setting of the wired remote controller for better service. Please select the height level from the below table.

<Ceiling Height Selection Table>

Ceiling Height		Selection Level	Description
1.6~8.3 kW	10.0~14.5 kW		
Up to 2.3 m	Up to 2.7 m	Low	Decrease the indoor airflow rate 1 step from standard level
Above 2.3 m, up to 2.7 m	Above 2.7 m, up to 3.2 m	Standard	Set the indoor airflow rate as standard level
Above 2.7 m, up to 3.1 m	Above 3.2 m, up to 3.6 m	High	Increase indoor airflow rate 1 step from standard level
Above 3.1 m, up to 3.6 m	Above 3.6 m, up to 4.2 m	Super high	Increase indoor airflow rate 2 steps from standard level

Ceiling height of 'Very high' function may not exist depending on the indoor unit.
For the details, refer to the product manual.

DIP Switch Setting

1. Indoor Unit

	Function	Description	Setting Off	Setting On	Default
SW1	Communication	N/A (Default)	-	-	Off
SW2	Cycle	N/A (Default)	-	-	Off
SW3	Group Control	Selection of Master or Slave	Master	Slave	Off
SW4	Dry Contact Mode	Selection of Dry Contact Mode	Wired/Wireless remote controller Selection of Manual or Auto operation Mode	Auto	Off
SW5	Installation	Fan continuous operation	Continuous operation Removall	-	Off
SW6	Heater linkage	N/A	-	-	Off
SW7	Ventilator linkage	Selection of Ventilator linkage	Linkage Removal	Working	Off
	Vane selection (Console)	Selection of up/down side Vane	Up side + Down side Vane	Up side Vane Only	
	Region selection	Selection tropical region	General model	Tropical model	
SW8	Etc.	Spare	-	-	Off

⚠CAUTION

For Multi V Models, DIP switch 1, 2, 6, 8 must be set OFF.

2. Outdoor Unit

In case that the products meet specific conditions, “Auto addressing” function can start automatically with the improved speed by turning the DIP switch #3 of the outdoor unit and resetting the power.

* Specific conditions:
  - All names of the indoor units are ARNU****4.
  - The serial number of Multi V super IV (outdoor units) is after October 2013.

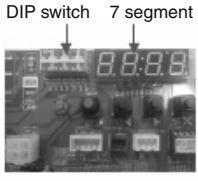

Outdoor Unit PCB

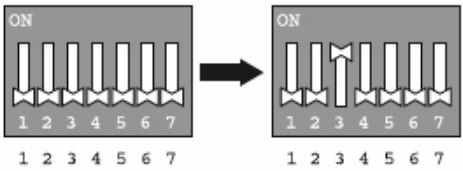

Outdoor Unit DIP Switch

Group Control Setting

1. Group Control 1

■ **Wired remote controller 1 + Standard Indoor Units**

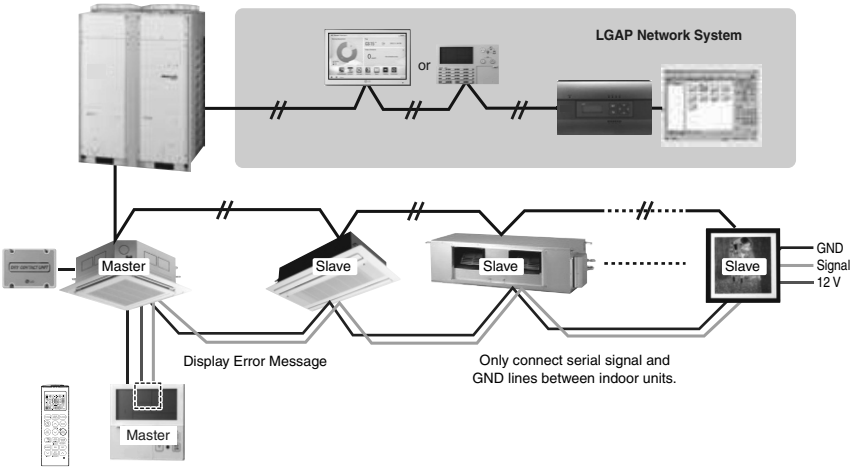

■ **DIP Switch in PCB**

⓾ **Master Setting**
- No. 3 Off

¶ **Slave Setting**
- No. 3 On



Indoor Unit DIP Switch

Some products have no DIP switch on PCB. It is possible to set indoor units to Master or Slave by using the wireless remote controller instead of DIP switch.
For the details of the setting, please refer to the manual of the wireless remote controller.

1. **It is possible to 16 indoor units(Max.) by one wired remote controller.**
   Set only one indoor unit to Master, set the others to Slave.
2. **It is possible to connect with every type of indoor units.**
3. **It is possible to use wireless remote controller at the same time.**
4. **It is possible to connect with Dry Contact and Central controller at the same time.**
   - The Master indoor unit is possible to recognize Dry Contact and Central Controller only.
5. **In case that any error occurs at indoor unit, the error code is displayed on the wired remote controller.**
   It is possible to control the other indoor units except the error units.

❊ It is possible to connect indoor units since Feb. 2009.
❊ It can be the cause of malfuctions when there is no setting of master and slave.

❊ In case of Group Control, it is possible to use following functions.
- Selection of operation, stop or mode
- Temperature setting and room temperature check
- Current time change
- Control of flow rate (High/Middle/Low)
- Reservation settings

It is not possible to use some functions.

2. Group Control 2

■ Wired remote controllers + Standard Indoor Units

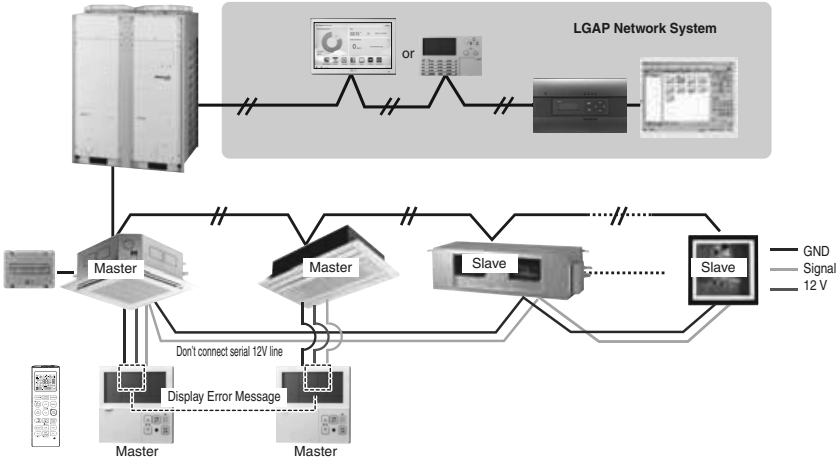

❊ It is possible to control 16 indoor units(Max.) with the master wired remote control.
❊ Other than those, it is same with the Group Control 1.

3. Group Control 3

■ **Mixture connection with indoor units and Fresh Air Intake Unit**

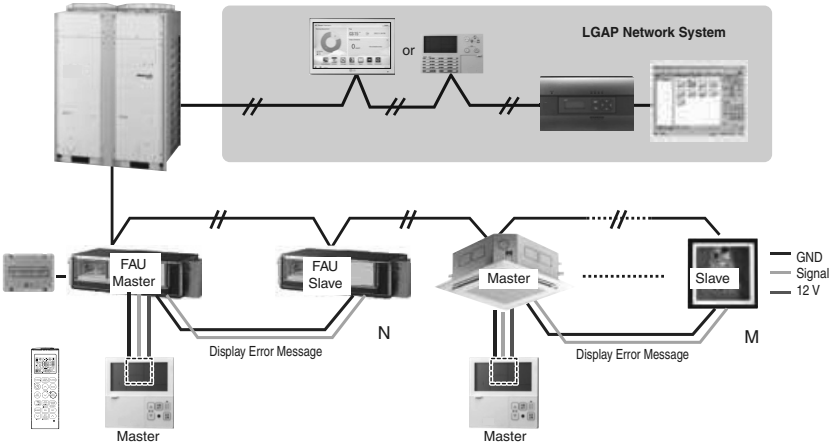

❊ **In case of connecting with standard indoor unit and Fresh Air Intake Unit, separate Fresh Air Intake Unit with standard units. (N, M ⩽ 16)**(Because setting temperature are different.)

❊ **Other than those, it is same with Group Control 1.**



* FAU : Fresh Air Intake Unit
Standard: Standard Indoor Unit

4. 2 Remote Control

■ **Wired remote controller 2 + Indoor unit 1**

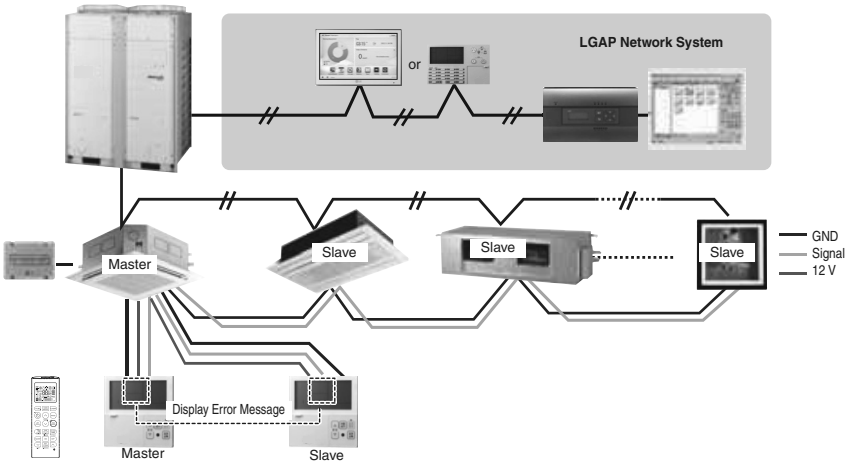

1. **It is possible to connect two wired remote controllers (Max.) with one indoor unit.**
   Set only one indoor unit to Master, set the others to Slave.
   Set only one wired remote controller to Master, set the others to Slave.
2. **Every types of indoor unit is possible to connect two remote controller.**
3. **It is possible to use wireless remote controller at the same time.**
4. **It is possible to connect with Dry Contact and Central controller at the same time.**
5. **In case that any error occurs at indoor unit, the error code is displayed on the wired remote controller.**
6. **There isn t limits of indoor unit function.**

5. Accessories for group control setting

It is possible to set group control by using below accessories.

Indoor unit 2 EA +Wired remote controller 1 EA	Indoor unit 1 EA +Wired remote controller 2 EA
❊ **PZCWRCG3 cable used for connection**	❊ **PZCWRC2 cable used for connection**

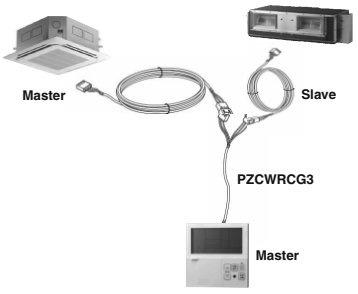

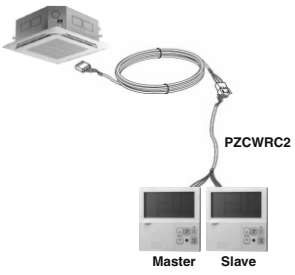

⚠CAUTION

- Apply totally enclosed noncombustible conduit in case of local building code Requiring plenum cable usage.

Airborne Noise Emission

The A-weighted sound pressure emitted by this product is below 70 dB.
** The noise level can vary depending on the site.

The figures quoted are emission level and are not necessarily safe working levels. Whilst there is a correlation between the emission and exposure levels, this cannot be used reliably to determine whether or not further precautions are required. Factor that influence the actual level of exposure of the workforce include the characteristics of the work room and the other sources of noise, i.e. the number of equipment and other adjacent processes and the length of time for which an operator exposed to the noise. Also, the permissible exposure level can vary from country to country. This information, however, will enable the user of the equipment to make a better evaluation of the hazard and risk.

Limiting concentration

Limiting concentration is the limit of Freon gas concentration where immediate measures can be taken without hurting human body when refrigerant leaks in the air. The limiting concentration shall be described in the unit of kg/m^3 (Freon gas weight per unit air volume) for facilitating calculation

Limiting concentration: 0.44 kg/m^3(R410A)

■ **Calculate refrigerant concentration**

$$\text{Refrigerant concentration} = \frac{\text{Total amount of replenished refrigerant in refrigerant facility (kg)}}{\text{Capacity of smallest room where indoor unit is installed (m}^3\text{)}}$$

LG
Life's Good

MFL65920802

P/No : MFL65920802_v0

LG CUSTOMER CARE

1800-180-3575 (Toll Free)
12 x 7 (9:00 AM – 9:00 PM)

www.lg.com/in/support
cac.service@lgepartner.com

To know more about LG, visit www.lg.com
For Corporate/Instutional enquiries,
please write to enquiries@lgindia.com

Regd. Office : LG Electronics India Pvt. Ltd., A Wing (3rd Floor), D-3, District Center, Saket, New Delhi - 110017