LG

MFL72139704250 3REV00

OLED65M5*
OLED77M5*
OLED83M5*

www.lg.com

PDF

Printed in Korea
Imprimé en Corée

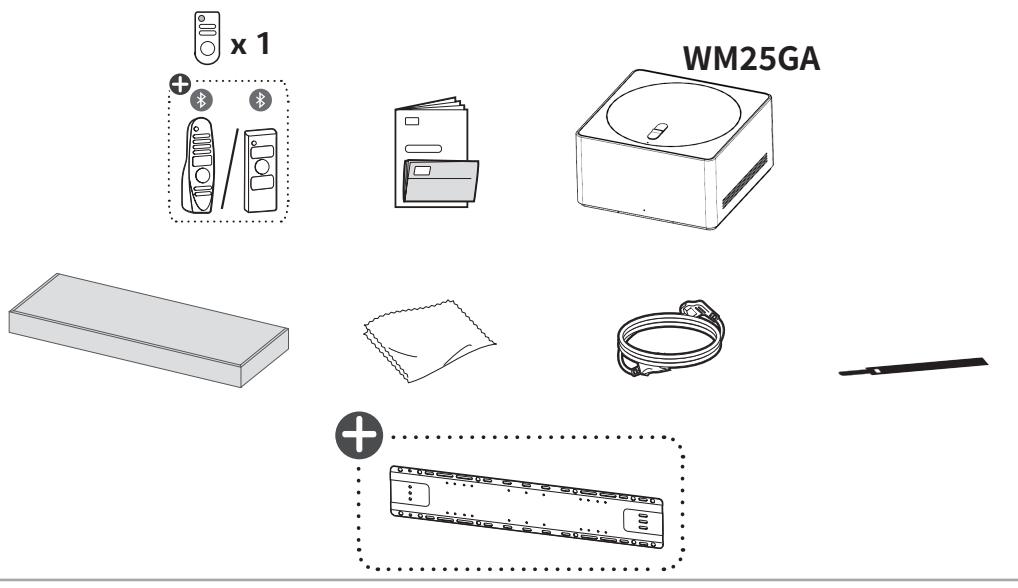

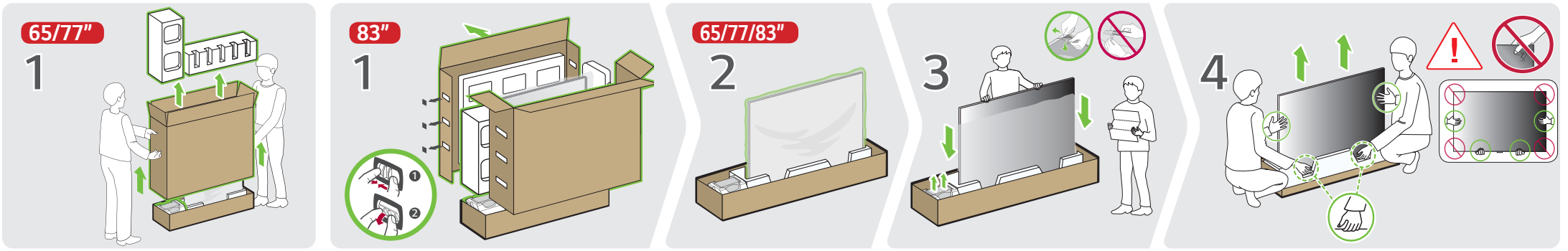

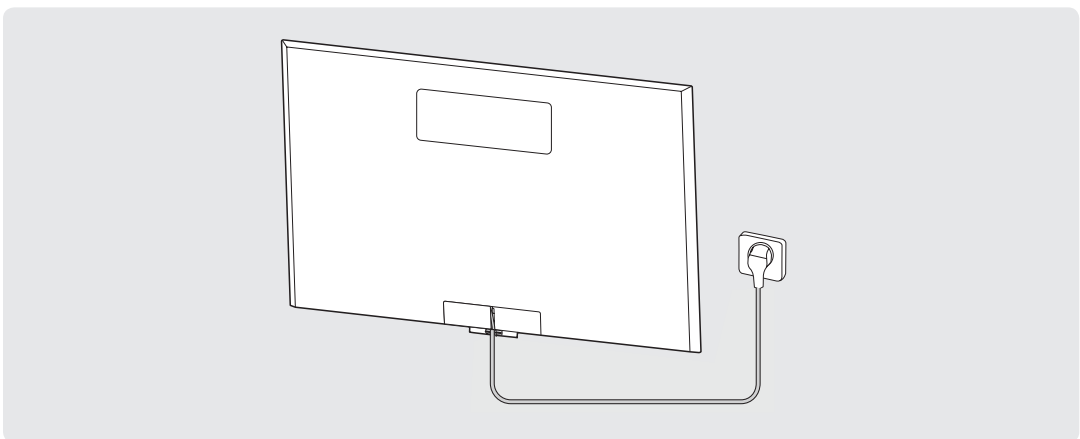

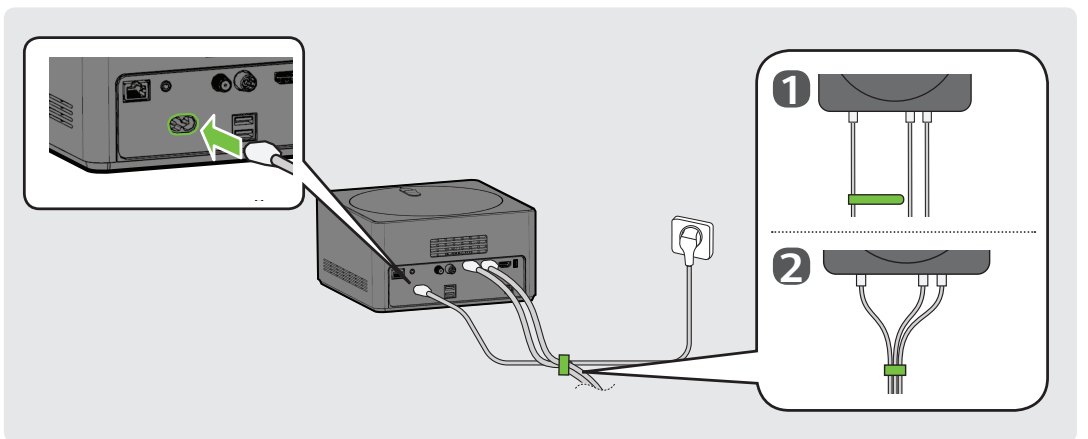

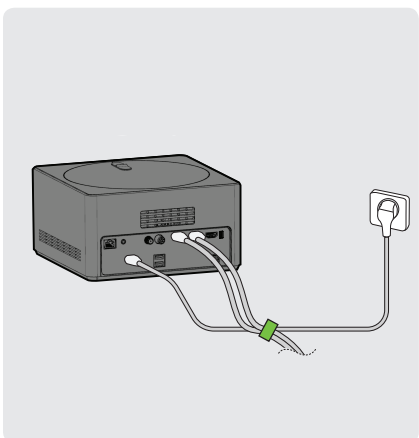

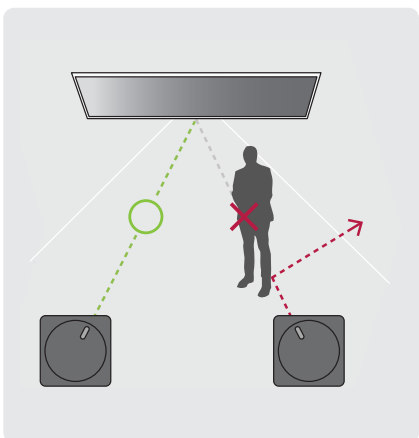

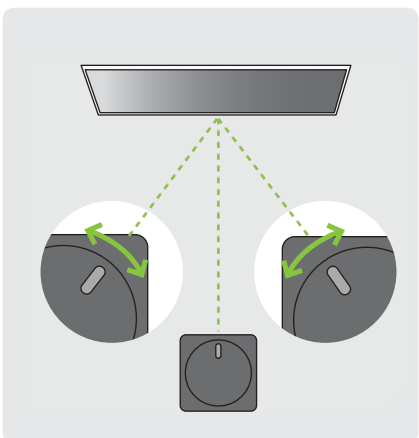

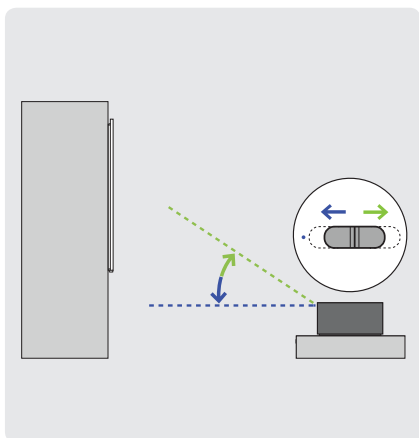

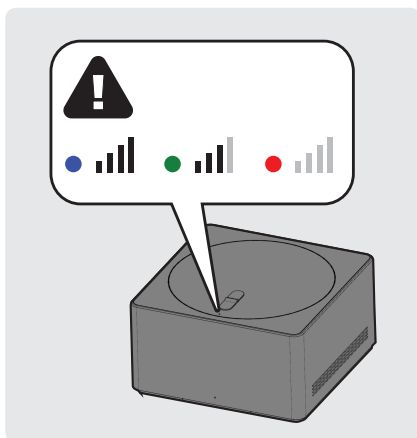

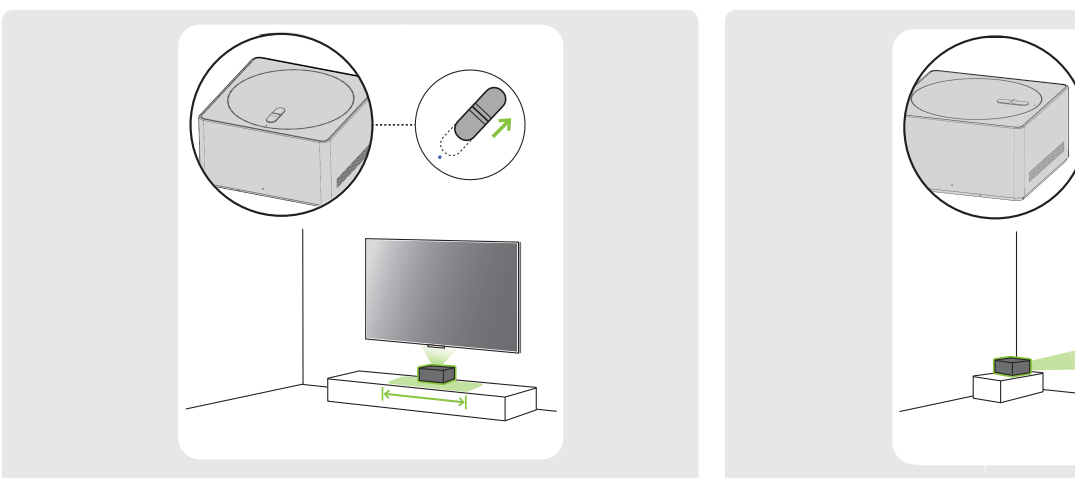

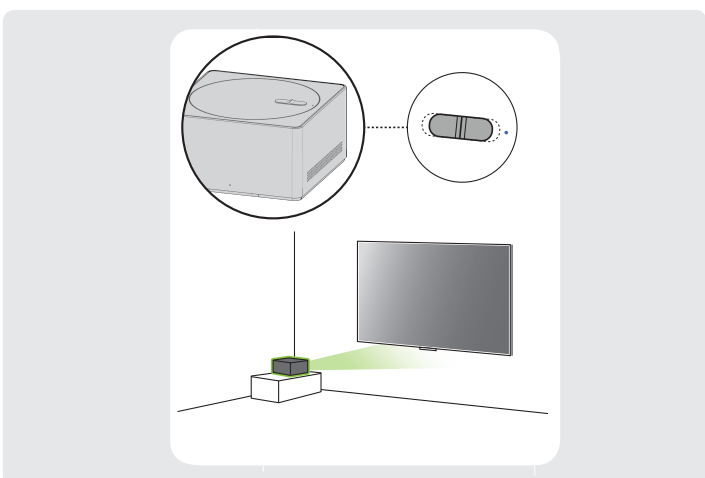

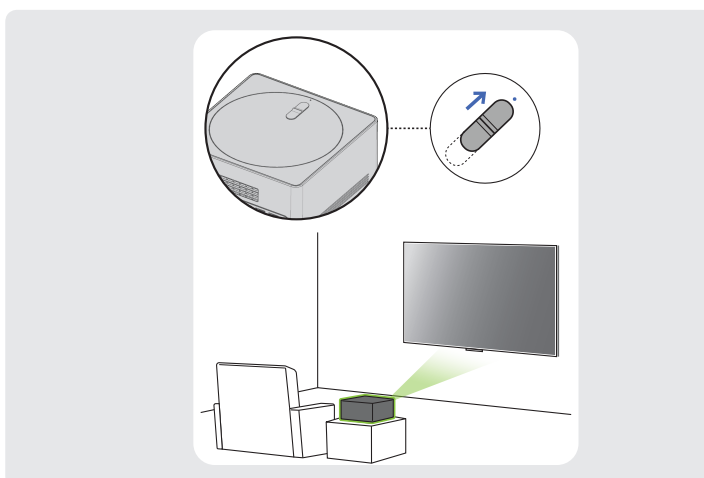

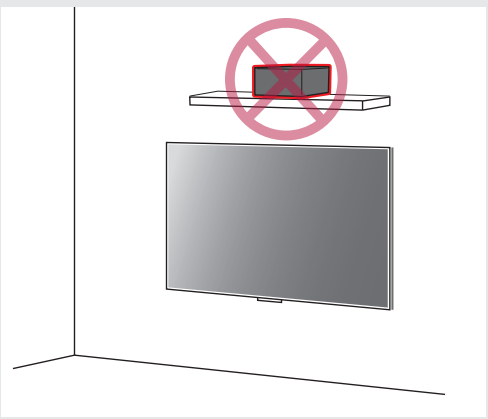
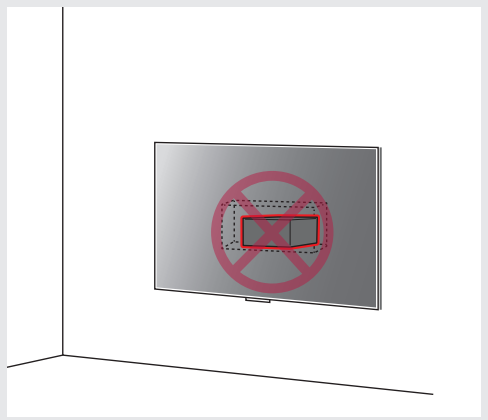
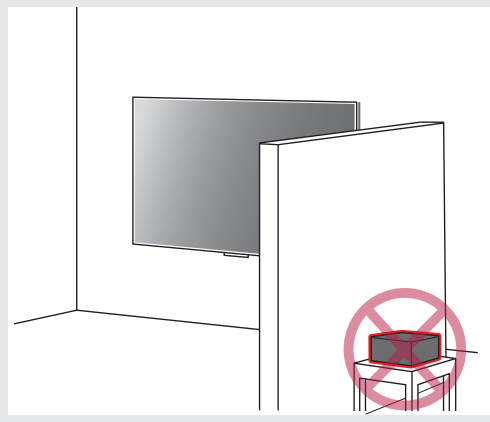
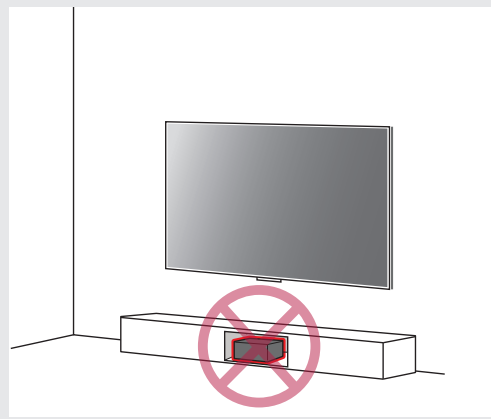
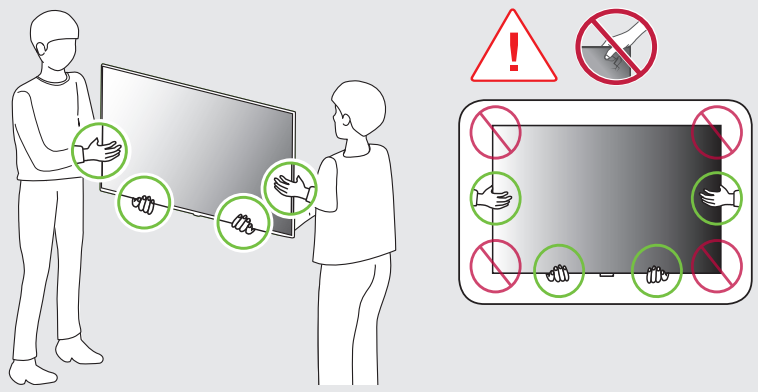
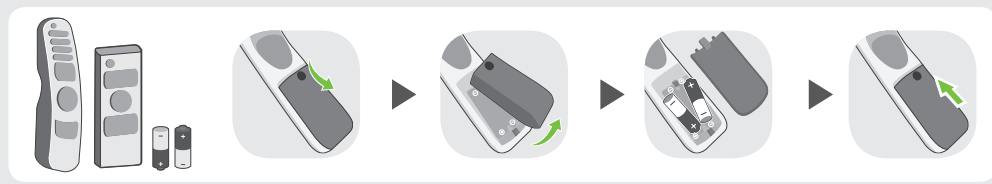

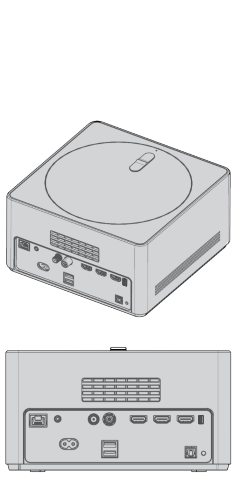
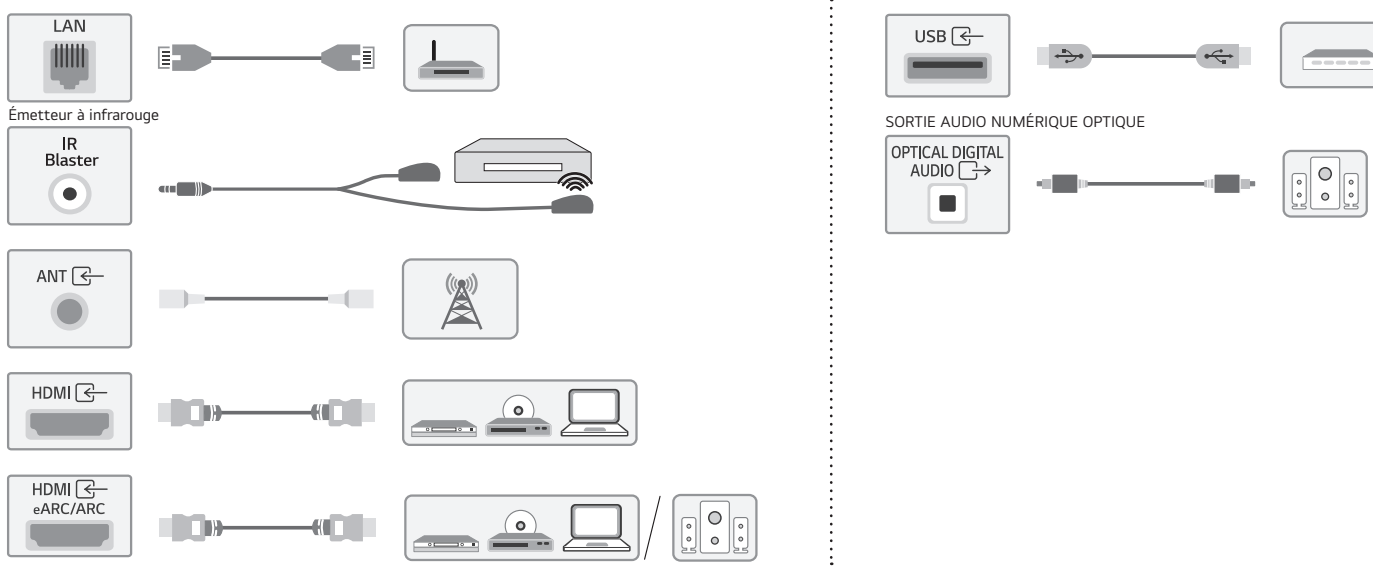

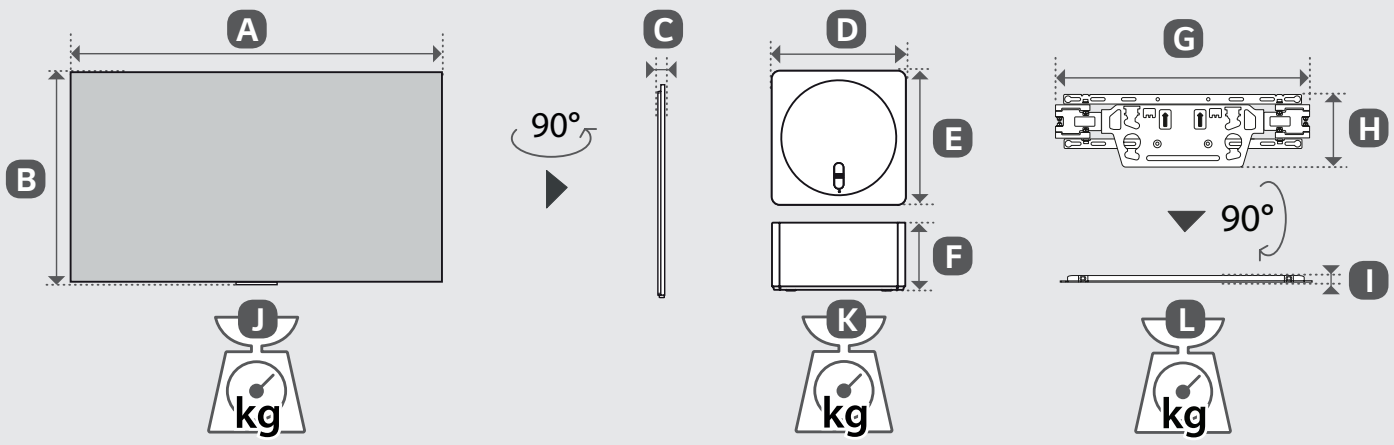

mm (inches / pulgadas / po / pol.)
kg (lbs / libras / lb)

	A	B	C	D	E	F	G	H	I	J	K	L	
OLED65M5*	1 441 mm (56.7) inches	831 mm (32.7) inches	24.3 mm (0.9) inches	230 mm (9.0) inches	230 mm (9.0) inches	121.7mm (4.7) inches	452 mm (17.7) inches	129 mm (5.0) inches	13 mm (0.5) inches	21.9 kg (48.2) lbs	2.4 kg (5.2) lbs	1.2 kg (2.6) lbs	450 W
OLED77M5*	1 712 mm (67.4) inches	986 mm (38.8) inches	24.8 mm (0.9) inches							33.1 kg (72.9) lbs			655 W
OLED83M5*	1 847 mm (72.7) inches	1 062 mm (41.8) inches	28 mm (1.1) inches							38.4 kg (84.6) lbs			719 W

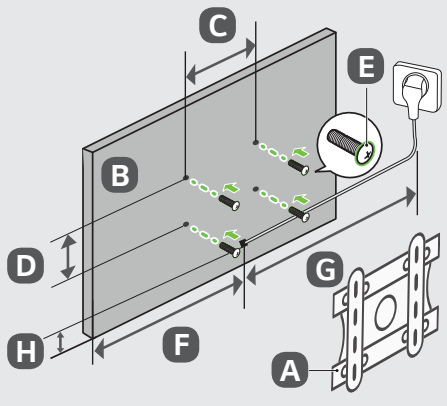

mm (inches / pulgadas / po / pol.)

A	B	C x D	E	F	G	H
WB24GCB	OLED65M5*	300 x 300 mm (11.8 x 11.8) inches	M6	720 mm (28.3) inches	≧1.5 m (59.0) inches	53 mm (2.0) inches
	OLED77M5*			856 mm (33.7) inches		57 mm (2.2) inches
	OLED83M5*	400 x 400 mm (15.7 x 15.7) inches		924 mm (36.3) inches		59mm (2.3) inches

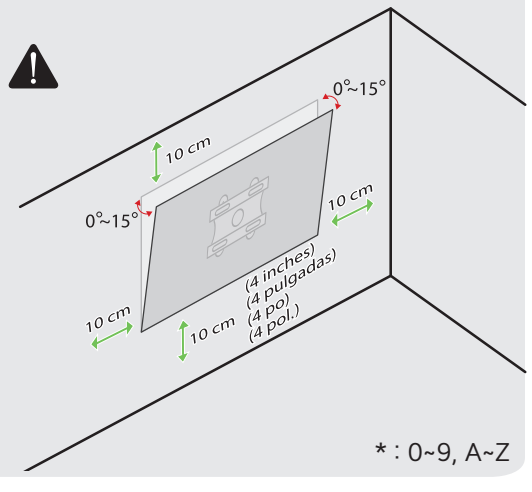

* : 0~9, A~Z