Printing Specification

1. Specification

Models	1. Model Name:	55UH5N
	2. Suffix:	TR
	3. Part No:	MFL67360874
	4. REV	REV00
	5. Number of pages	2
	6. Folded/Unfolded	-
SIZE	7. Trim size (W x H)_Unfolded (mm)	148 x 210 (+/-5)
	8. Trim size (W x H)_folded (mm)	-
	9. Bindery	-
COVER	10. Color (Cover)	1
	11. Paper (Cover)	Wood free
	12. Weight (cover) (g/m^2)	70 (+/-10)
INNER	13. Color (inner)	1
	14. Paper (inner)	Wood free
	15. Weight (inner) (g/m^2)	70 (+/-10)
	16. Coating	No
	17. Thomson	No
	18. Sub-material	No
	19. Languages	ENG

1.1 Folding / Cover

Folding Step

Folded

Front Back

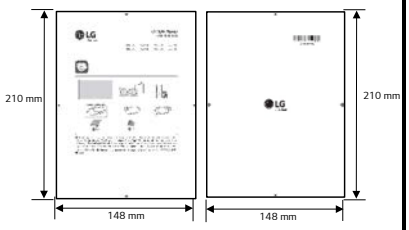

2. Origin Notification

Copyright © 2021 LG Electronics Inc. All Rights Reserved. Printed in Korea

Copyright © 2021 LG Electronics inc. Tous droits réservés. Imprimé en Corée

www.lg.com

Changes the Country name.

Printed in [Country Name in English]

Imprimé en(au) [Country Name in French]

[Country Name] (ENG/FRE)	
LGERS / LGEMX :	Printed in Mexico Imprimé au Mexique
LGEKR :	Printed in Korea Imprimé en Corée
LGEMA :	Printed in Poland Imprimé en Pologne
LGEND :	Printed in China Imprimé en Chine
LGEIN :	Printed in Indonesia Imprimé en Indonésie
Others :	Each Country name.

NOTE

[Restriction of Hazardous Substances]

Hazardous substances on this product should be satisfied by substance regulation of Level A-I, A-II, SVHC according to LG(52)B—5011 standard.
Especially, Part should be followed and controlled the following specification.
(1) Hazardous substances test report should be submitted when part certification test and first mass production.
(2) Especially, Don't use or contain lead (Pb) and cadmium (Cd) in ink.

INK REQUIREMENT FOR EU

(1) The amount of MOAH/MOSH must be less than 0.1% of the weight of the INK used.
*MOAH(Mineral Oil Aromatic Hydrocarbons) : Consisting of 1 to 7 aromatic cycles
*MOSH(Mineral Oil Saturated Hydrocarbons) : Consisting of 16 to 35 carbon atoms
(2) From 01 January 2025 : Ban on the use of MOAH in INK up to a limit of one part per million(1ppm) for compounds of 3 to 7 aromatic cycles

3. History

Rev. Number	Date	Description	ECO Number	Owner	Aditya K
REV07					
REV06					
REV05					
REV04					
REV03					
REV02					
REV01					
REV00	10/26/2023	-	-	Checked :	Nitin Hase
				Approved :	Santosh.C

LG Digital Signage
(MONITOR SIGNAGE)

43UH5N-E 49UH5N-E 55UH5N-E 65UH5N-E
43UH7N-E 49UH7N-E 55UH7N-E 65UH7N-E

Quick Start Guide

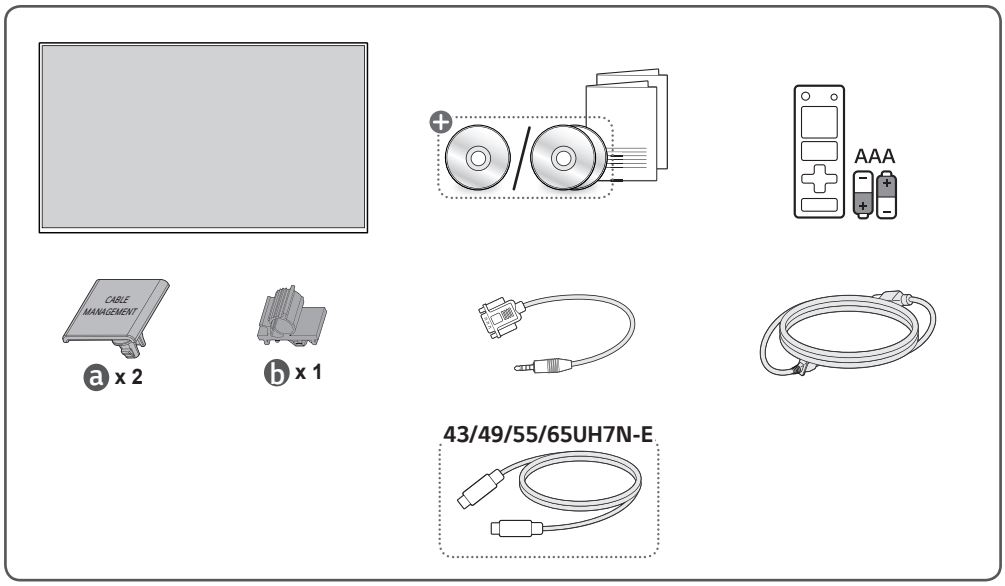

⊕: Depending on country ⊕: Depending on model

Images and Accessory parts shown in manual may vary depending on model

Unpacking

Check your product box for the following items.
If there are any missing accessories, contact the local dealer where you purchased your product.
The illustrations in this manual may differ from the actual product and item.

MFL67360874 2310REV00

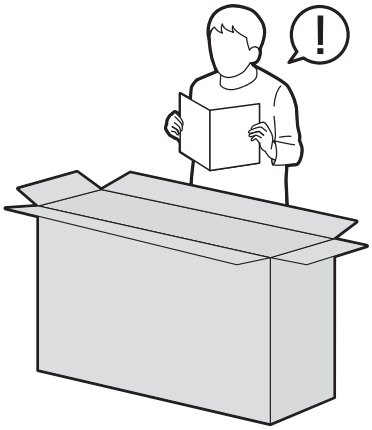
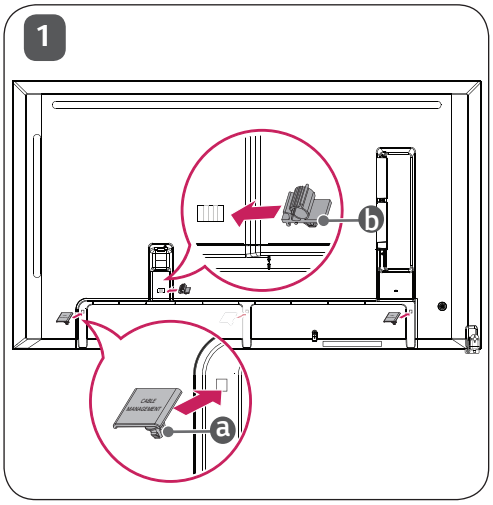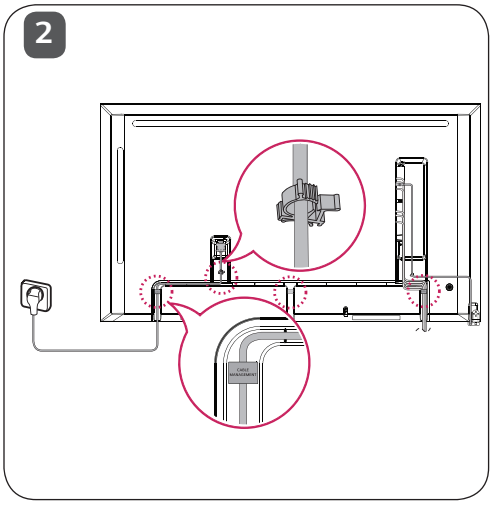
- Worldwide : www.lg.com/id-manual
- SuperSign : http://partner.lge.com