LG
Life's Good

OWNER'S MANUAL

Safety and Reference

LED TV*

* LG LED TV applies LCD screen with LED backlights.

Please read this manual carefully before operating your set and retain it for future reference.



SAC36633555
(1812-REV00)

www.lg.com

Copyright © 2018 LG Electronics Inc. All Rights Reserved.

India region only. (Below sentence is not applicable for above 1920 X 1080 resolution TV models.)

ATTENTION:

This product is qualified for the BEE Star rating in the 'Home' Mode.
The Objectives of Star Labeling Program is designed to promote energy efficient products and practices.
When the television is initially set up, it is designed to meet the BEE Star Labeling requirements while maintaining optimum picture quality.

- Changes to certain functionalities of this television (TV Guide, Picture/sound etc) may change the power consumption.
- Depending upon such changed setting (eg., Retail mode), the power consumption may vary which possibly could exceed the stated energy consumption.

To reset the television to Star rating qualified settings, select 'Home' mode from the initial set-up procedure in 'factory settings' under the 'Set-up' menu.

Warning! Safety Instructions



CAUTION

RISK OF ELECTRIC SHOCK
DO NOT OPEN



CAUTION : TO REDUCE THE RISK OF ELECTRIC SHOCK, DO NOT REMOVE COVER (OR BACK). NO USER-SERVICEABLE PARTS INSIDE. REFER TO QUALIFIED SERVICE PERSONNEL.



This symbol is intended to alert the user to the presence of uninsulated "dangerous voltage" within the product's enclosure that may be of sufficient magnitude to constitute a risk of electric shock to persons.



This symbol is intended to alert the user to the presence of important operating and maintenance (servicing) instructions in the literature accompanying the appliance.

WARNING : TO REDUCE THE RISK OF FIRE AND ELECTRIC SHOCK, DO NOT EXPOSE THIS PRODUCT TO RAIN OR MOISTURE.

- TO PREVENT THE SPREAD OF FIRE, KEEP CANDLES OR OTHER ITEMS WITH OPEN FLAMES AWAY FROM THIS PRODUCT AT ALL TIMES.
- **Do not place the TV and/or remote control in the following environments:**
  - Keep the product away from direct sunlight.
  - An area with high humidity such as a bathroom
  - Near any heat source such as stoves and other devices that produce heat.
  - Near kitchen counters or humidifiers where they can easily be exposed to steam or oil.
  - An area exposed to rain or wind.
  - Do not expose to dripping or splashing and do not place objects filled with liquids, such as vases, cups, etc. on or over the apparatus (e.g., on shelves above the unit).
  - Near flammable objects such as gasoline or candles, or expose the TV to direct air conditioning.
  - Do not install in excessively dusty places.

  Otherwise, this may result in fire, electric shock, combustion/ explosion, malfunction or product deformation.
- **Ventilation**
  - Install your TV where there is proper ventilation. Do not install in a confined space such as a bookcase.
  - Do not install the product on a carpet or cushion.
  - Do not block or cover the product with cloth or other materials while unit is plugged in.
- Take care not to touch the ventilation openings. When watching the TV for a long period, the ventilation openings may become hot.
- Protect the power cord from physical or mechanical abuse, such as being twisted, kinked, pinched, closed in a door, or walked upon. Pay particular attention to plugs, wall outlets, and the point where the cord exits the device.
- Do not move the TV whilst the Power cord is plugged in.
- Do not use a damaged or loosely fitting power cord.
- Be sure do grasp the plug when unplugging the power cord. Do not pull on the power cord to unplug the TV.
- Do not connect too many devices to the same AC power outlet as this could result in fire or electric shock.
- **Disconnecting the Device from the Main Power**
  - The power plug is the disconnecting device. In case of an emergency, the power plug must remain readily accessible.
- Do not let your children climb or cling onto the TV. Otherwise, the TV may fall over, which may cause serious injury.
- **Outdoor Antenna Grounding** (Can differ by country):
  - If an outdoor antenna is installed, follow the precautions below. An outdoor antenna system should not be located in the vicinity of overhead power lines or other electric light or power circuits, or where it can come in contact with such power lines or circuits as death or serious injury can occur.
    Be sure the antenna system is grounded to provide some protection against voltage surges and built-up static charges. Section 810 of the National Electrical Code (NEC) in the U.S.A. provides information with respect to proper grounding of the mast and supporting structure, grounding of the lead-in wire to an antenna discharge unit, size of grounding conductors, location of antenna discharge unit, connection to grounding electrodes and requirements for the grounding electrode.
    Antenna grounding according to the National Electrical Code, ANSI/ NFPA 70

- **Grounding** (Except for devices which are not grounded.)
  - TV with a three-prong grounded AC plug must be connected to a three-prong grounded AC outlet. Ensure that you connect the earth ground wire to prevent possible electric shock.

⚠ CAUTION

- Never touch this apparatus or antenna during a lightning storm. You may be electrocuted.
- Make sure the power cord is connected securely to the TV and wall socket if not secured damage to the Plug and socket may occur and in extreme cases a fire may break out.
- Do not insert metallic or inflammable objects into the product. If a foreign object is dropped into the product, unplug the power cord and contact the customer service.
- Do not touch the end of the power cord while it is plugged in. You may be electrocuted.
- **If any of the following occur, unplug the product immediately and contact your local customer service.**
  - The product has been damaged.
  - If water or another substance enters the product (like an AC adapter, power cord, or TV).
  - If you smell smoke or other odors coming from the TV
  - When lightning storms or when unused for long periods of time.

  Even the TV is turned off by remote control or button, AC power source is connected to the unit if not unplugged in.

⚠ WARNING

- Do not use high voltage electrical equipment near the TV (e.g., a bug zapper). This may result in product malfunction.
- Do not attempt to modify this product in any way without written authorization from LG Electronics. Accidental fire or electric shock can occur. Contact your local customer service for service or repair. Unauthorized modification could void the user's authority to operate this product.
- Use only an authorized attachments / accessories approved by LG Electronics. Otherwise, this may result in fire, electric shock, malfunction, or product damage.
- Never disassemble the AC adapter or power cord. This may result in fire or electric shock.
- Handle the adapter carefully to avoid dropping or striking it. An impact could damage the adapter.
- To reduce the risk of fire or electrical shock, do not touch the TV with wet hands. If the power cord prongs are wet or covered with dust, dry the power plug completely or wipe dust off.
- **Batteries**
  - Store the accessories (battery, etc.) in a safe location out of the reach of children.
  - Do not short circuit, disassemble, or allow the batteries to overheat. Do not dispose of batteries in a fire. Batteries should not be exposed to excessive heat.
- **Moving**
  - When moving, make sure the product is turned off, unplugged, and all cables have been removed. It may take 2 or more people to carry larger TVs. Do not press or put stress on the front panel of the TV. Otherwise, this may result in product damage, fire hazard or injury.
- Keep the packing anti-moisture material or vinyl packing out of the reach of children.
- Do not allow an impact shock, any objects to fall into the product, and do not drop anything onto the screen.
- Do not press strongly upon the panel with a hand or a sharp object such as a nail, pencil, or pen, or make a scratch on it. It may cause damage to screen.
- **Cleaning**
  - When cleaning, unplug the power cord and wipe gently with a soft/dry cloth. Do not spray water or other liquids directly on the TV. Do not clean your TV with chemicals including glass cleaner, any type of air freshener, insecticide, lubricants, wax (car, industrial), abrasive, thinner, benzene, alcohol etc., which can damage the product and/or its panel. Otherwise, this may result in electric shock or product damage.

Preparing

NOTE

- If the TV is turned on for the first time after it was shipped from the factory, initialization of the TV may take a few minutes.
- Image shown may differ from your TV.
- Your TV's OSD (On Screen Display) may differ slightly from that shown in this manual.
- The available menus and options may differ from the input source or product model that you are using.
- New features may be added to this TV in the future.
- The device must be easily accessed to a location outlet near the access. Some devices are not made by turning on / off button, turning off the device and unplugging the power cord.
- The items supplied with your product may vary depending on the model.
- Product specifications or contents of this manual may be changed without prior notice due to upgrade of product functions.
- For an optimal connection, HDMI cables and USB devices should have bezels less than 10 mm thick and 18 mm width. Use an extension cable that supports USB 2.0 if the USB cable or USB memory stick does not fit into your TV's USB port.

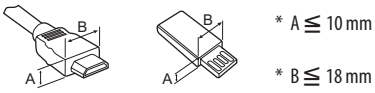

- Use a certified cable with the HDMI logo attached.
- If you do not use a certified HDMI cable, the screen may not display or a connection error may occur. (Recommended HDMI Cable Types)
  - High-Speed HDMI®/™ Cable (3 m or less)
  - High-Speed HDMI®/™ Cable with Ethernet (3 m or less)

CAUTION

- Do not use any unapproved items to ensure the safety and product life span.
- Any damage or injuries caused by using unapproved items are not covered by the manufacturer's warranty.
- When attaching the stand to the TV set, place the screen facing down on a cushioned table or flat surface to protect the screen from scratches.
- Make sure that the screws are fastened completely. (If they are not fastened securely enough, the TV may tilt forward after being installed.) Do not use too much force and over tighten the screws; otherwise screw may be damaged and not tighten correctly.
- Make sure to wring any excess water or cleaner from the cloth.
- Do not spray water or cleaner directly onto the TV screen.
- Make sure to spray just enough of water or cleaner onto a dry cloth to wipe the screen.
- When cleaning the product, be careful not to allow any liquid or foreign objects to enter the gap between the upper, left or right side of the panel and the guide panel. (Depending on model)



Separate Purchase

Separate purchase items can be changed or modified for quality improvement without any notification. Contact your dealer to buy these items. These devices only work with certain models.

The model name or design may be changed depending on the upgrade of product functions, manufacturer's circumstances or policies.

LED Clock

(Depending on model)

LEC-005

Magic Remote Control

(Depending on model)

AN-MR650H	**AN-MR18HA**

Check whether your TV model supports Bluetooth in the Wireless Module Specification to verify whether it can be used with the Magic Remote.

Wall Mounting Bracket

(Depending on model)

Make sure to use screws and wall mount bracket that meet the VESA standard. Standard dimensions for the wall mount kits are described in the following table.

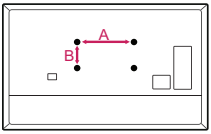

Model	49UU76* 43UU64* 43UU66*	55UU76* 49/55UU64* 49/55UU66*
VESA (A x B) (mm)	200 x 200	300 x 300
Standard screw	M6	M6
Number of screws	4	4
Model	65UU76* 60/65UU64* 65UU66*	70/75/86UU64*
VESA (A x B) (mm)	300 x 300	600 x 400
Standard screw	M6	M8
Number of screws	4	4

Lifting and moving the TV

Please note the following advice to prevent the TV from being scratched or damaged and for safe transportation regardless of its type and size.

- It is recommended to move the TV in the box or packing material that the TV originally came in.
- Before moving or lifting the TV, disconnect the power cord and all cables.
- When holding the TV, the screen should face away from you to avoid damage.



- Hold the top and bottom of the TV frame firmly. Make sure not to hold the transparent part, speaker, or speaker grill area.

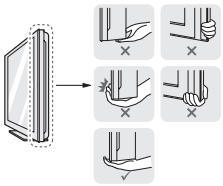

- When transporting a large TV, there should be at least 2 people.
- When transporting the TV by hand, hold the TV as shown in the following illustration.

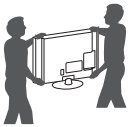

- When transporting the TV, do not expose the TV to jolts or excessive vibration.
- When transporting the TV, keep the TV upright, never turn the TV on its side or tilt towards the left or right.
- Do not apply excessive pressure to cause flexing / bending of frame chassis as it may damage screen.
- When handling the TV, be careful not to damage the protruding buttons.

⚠ CAUTION

- Avoid touching the screen at all times, as this may result in damage to the screen.
- Do not move the TV by holding the cable holders, as the cable holders may break, and injuries and damage to the TV may occur.
- When attaching the stand to the TV set, place the screen facing down on a cushioned table or flat surface to protect the screen from scratches.

Mounting on a Table

1 Lift and tilt the TV into its upright position on a table.
- Leave a 10 cm (minimum) space from the wall for proper ventilation.

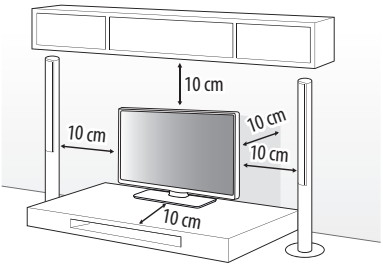

(Depending on model)

2 Connect the power cord to a wall outlet.

CAUTION

- Do not apply foreign substances (oils, lubricants, etc.) to the screw parts when assembling the product. (Doing so may damage the product.)
- If you install the TV on a stand, you need to take actions to prevent the product from overturning. Otherwise, the product may fall over, which may cause injury.
- Do not use any unapproved items to ensure the safety and product life span.
- Any damage or injuries caused by using unapproved items are not covered by the manufacturer's warranty.
- Make sure that the screws are inserted correctly and fastened securely. (If they are not fastened securely enough, the TV may tilt forward after being installed.) Do not use too much force and over tighten the screws; otherwise screw may be damaged and not tighten correctly.
- If a television is not positioned in a sufficiently stable location, it can be potentially hazardous due to falling. Many injuries, particularly to children, can be avoided by taking simple precautions such as:
  - » Using cabinets or stands recommended by the manufacturer of the television.
  - » Only using furniture that can safely support the television.
  - » Ensuring the television is not overhanging the edge of the supporting furniture.
  - » Not placing the television on tall furniture (for example, cupboards or bookcases) without anchoring both the furniture and the television to a suitable support.
  - » Not standing the televisions on cloth or other materials placed between the television and supporting furniture.
  - » Educating children about the dangers of climbing on furniture to reach the television or its controls.

Attaching the TV to a Desk

(Depending on model)

The TV should be attached to a desk so it cannot be pulled in a forward/ backward direction, potentially causing injury or damaging the product.

A type

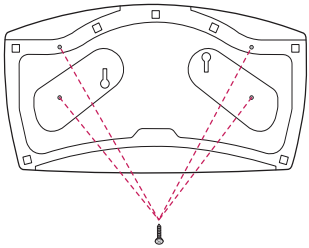

4-Screws
(Not supplied with TV)

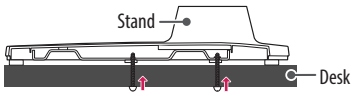

- Screw : M5 x L (*L: Table depth + 8~10 mm)
  ex) Table depth: 15 mm, Screw: M5 x L25

B type

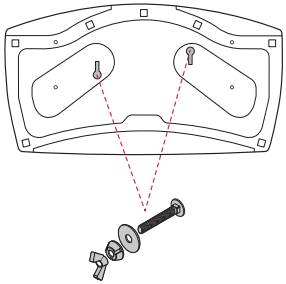

2-Screws for Stand Fixing,
2-Washers for Stand Fixing,
2-Nuts for Stand Fixing
(Supplied with TV)

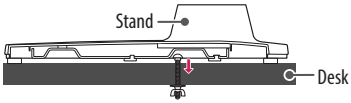

Using the Kensington security system

(Features may vary depending on models.)

The Kensington security system connector is located at the rear of the TV. For more information of installation and using, refer to the manual provided with the Kensington security system or visit *http://www.kensington.com.* Connect the Kensington security system cable between the TV and a table.

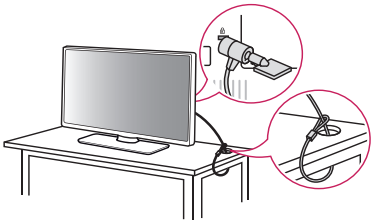

(Depending on model)

Securing the TV to a Wall

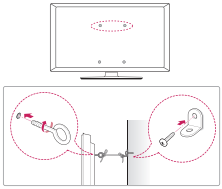

(Depending on model)

1 Insert and tighten the eye-bolts, or TV brackets and bolts on the back of the TV.
- If there are bolts inserted at the eye-bolts position, remove the bolts first.

2 Mount the wall brackets with the bolts to the wall.
Match the location of the wall bracket and the eye-bolts on the rear of the TV.

3 Connect the eye-bolts and wall brackets tightly with a sturdy rope.
Make sure to keep the rope horizontal with the flat surface.

NOTE

- Use a platform or cabinet that is strong and large enough to support the TV securely.
- Brackets, bolts and ropes are not provided. You can obtain additional accessories from your local dealer.

Mounting to the Wall

Attach an optional wall mount bracket at the rear of the TV carefully and install the wall mount bracket on a solid wall perpendicular to the floor. When you attach the TV to other building materials, please contact qualified personnel. LG recommends that wall mounting be performed by a qualified professional installer. We recommend the use of LG's wall mount bracket. LG's wall mount bracket is easy to move with cables connected. When you do not use LG's wall mount bracket, please use a wall mount bracket where the device is adequately secured to the wall with enough space to allow connectivity to external devices. It is advised to connect all the cables before installing fixed wall mounts.

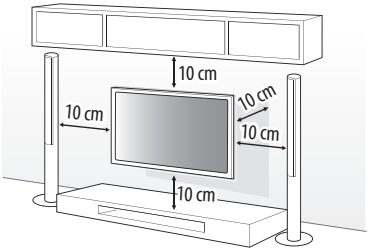

(Depending on model)

CAUTION

- Remove the stand before installing the TV on a wall mount by performing the stand attachment in reverse.
- For more information of screws and wall mount bracket, refer to the Separate purchase.
- If you intend to mount the product to a wall, attach VESA standard mounting interface (optional parts) to the back of the product. When you install the set to use the wall mounting bracket (optional parts), fix it carefully so as not to drop.
- When mounting a TV on the wall, make sure not to install the TV by hanging the power and signal cables on the back of the TV.
- Do not install this product on a wall if it could be exposed to oil or oil mist. This may damage the product and cause it to fall.

NOTE

- When installing the wall mounting bracket, use the adhesive label provided. The adhesive label will protect the opening from accumulating dust and dirt. (Only when the item of the following form is provided)

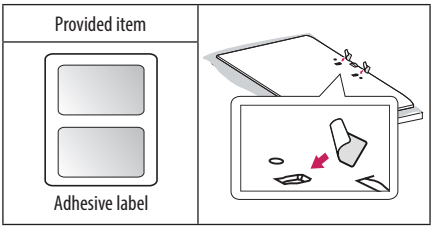

- When installing the wall mounting bracket, it is recommended to cover the stand hole using tape, in order to prevent the influx of dust and insects. (Depending on model)

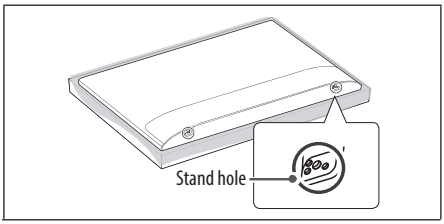

Connections

Connect various external devices to the TV and switch input modes to select an external device. For more information of external device's connection, refer to the manual provided with each device.

Antenna/Cable

Connect the TV to a wall antenna socket with an RF cable (75 Ω).

- Use a signal splitter to use more than 2 TVs.
- If the image quality is poor, install a signal amplifier properly to improve the image quality.
- If the image quality is poor with an antenna connected, try to realign the antenna in the correct direction.
- An antenna cable and converter are not supplied.
- For a location that is not supported with ULTRA HD broadcasting, this TV cannot receive ULTRA HD broadcasts directly. (Depending on model)

Satellite dish

Connect the TV to a satellite dish to a satellite socket with a satellite RF cable (75 Ω). (Depending on model)

CI module

View the encrypted (pay) services in digital TV mode. (Depending on model)

- Check if the CI module is inserted into the PCMCIA card slot in the right direction. If the module is not inserted properly, this can cause damage to the TV and the PCMCIA card slot.
- If the TV does not display any video and audio when CI+ CAM is connected, please contact to the Terrestrial/Cable/Satellite Service Operator.

Other connections

Connect your TV to external devices. For the best picture and audio quality, connect the external device and the TV with the HDMI cable. Some separate cable is not provided.

HDMI

- Supported HDMI Audio format (Depending on model):
  DTS (44.1 kHz / 48 kHz / 88.2 kHz / 96 kHz),
  DTS HD (44.1 kHz / 48 kHz / 88.2 kHz / 96 kHz / 176.4 kHz / 192 kHz),
  True HD (48 kHz),
  Dolby Digital / Dolby Digital Plus (32 kHz / 44.1 kHz / 48 kHz),
  PCM (32 kHz / 44.1 kHz / 48 kHz / 96 kHz / 192 kHz)

(Only UHD models)

- **SMART** → ⚙ → ⋮ (⚙) → **Picture** → **Additional Settings** → **HDMI ULTRA HD Deep Colour**
  - On : Support 4K @ 50/60 Hz (4:4:4, 4:2:2, 4:2:0)
  - Off : Support 4K @ 50/60 Hz 8 bit (4:2:0)

  If the device connected to Input Port also supports ULTRA HD Deep Colour, your picture may be clearer. However, if the device doesn't support it, it may not work properly. In that case, change the TV's **HDMI ULTRA HD Deep Colour** setting to Off.

USB

Some USB Hubs may not work. If a USB device connected through a USB Hub is not detected, connect it directly to the USB port on the TV.

NOTE

- Use USB 1 port when connecting a webcam. USB 2 port may not support some webcam. (Depending on model)

External Devices

Available external devices are: Blu-ray player, HD receivers, DVD players, VCRs, audio systems, USB storage devices, PC, gaming devices, and other external devices.

- The external device connection may differ from the model.
- Connect external devices to the TV regardless of the order of the TV port.
- Refer to the external equipment's manual for operating instructions.
- If you connect a gaming device to the TV, use the cable supplied with the gaming device.
- In PC mode, there may be noise associated with the resolution, vertical pattern, contrast or brightness. If noise is present, change the PC output to another resolution, change the refresh rate to another rate or adjust the brightness and contrast on the **Picture** menu until the picture is clear.
- In PC mode, some resolution settings may not work properly depending on the graphics card.
- If ULTRA HD content is played on your PC, video or audio may become disrupted intermittently depending on your PC's performance. (Depending on model)
- When connecting via a wired LAN, it is recommended to use a CAT 7 cable. (Only when **LAN** port is provided.)

External Speakers

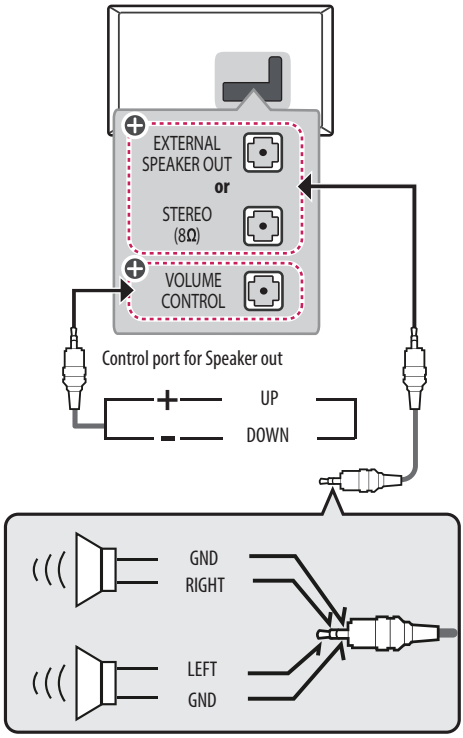

⊕ : Depending on model

CAUTION

- Use only with the 3 Pole 3.5 mm Stereo Jack.
- Do not connect your headphones or earphones to the port for connecting an external speaker.

Method of volume control port

(Depending on model)

- Cable Spec.

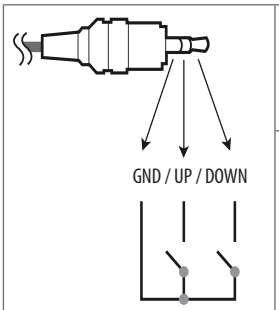

	Each Up / Down pin is pulled to 3.3 V with CPU GPIO.
	CPU detects transition from 3.3 V to GND level for volume control.

Network

Wired network connection

(Depending on model)

This TV can be connected to a Pro:Centric server via the **LAN** port. After making the physical connection, the TV needs to be set up for network communication.

Connect the **LAN** port of the Modem or Router from Pro:Centric server to the **LAN** port on the TV.

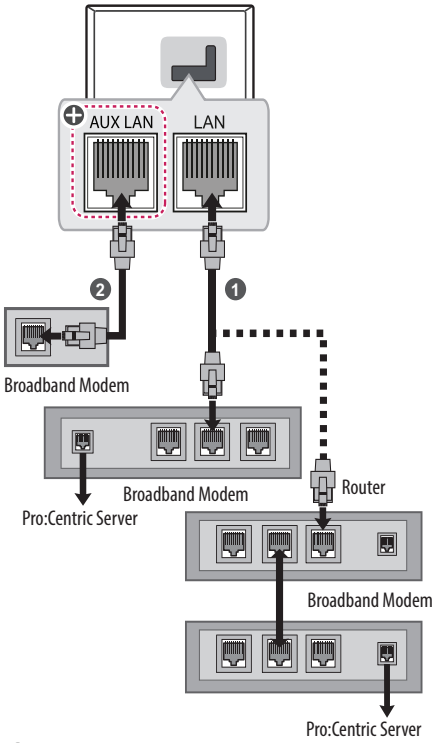

⊕ : Depending on model

1. Connect the **LAN** port of the Modem or Router to the **LAN** port on the TV.
2. Connect the **LAN** port of the PC to the **AUX LAN** port on the TV.

⚠ CAUTION

- Do not connect a modular phone cable to the **LAN** port.
- Since there are various connection methods, please follow the specifications of your telecommunication carrier or internet service provider.

Using Button

(*Image may vary depending on models.)

You can simply operate the TV functions, using the button.

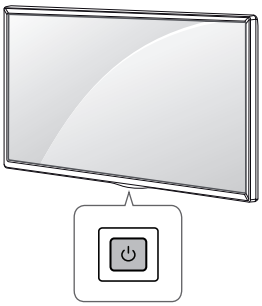

Basic functions

	Power On (Press) Power Off[1] (Press and Hold) Menu Control (Press[2]) Menu Selection (Press and Hold[3])

1 All running apps will close.

2 You can access and adjust the menu by pressing the button when TV is on.

3 You can use the function when you access menu control.

Adjusting the menu

When the TV is turned on, press the ⏻ button one time. You can adjust the Menu items using the button.

⏻	Turns the power off.
⏏	Changes the input source.
∧ ∨	Scrolls through the saved programmes.
+ −	Adjusts the volume level.

Adjusting the Angle of the TV to suit view

(Depending on model)

Swivel 20 degrees to the left or right and adjust the angle of the TV to suit your view.

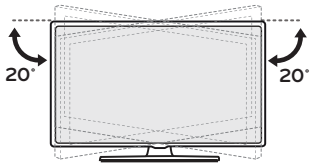

⚠ CAUTION

- When adjusting the angle of the product, watch out for your fingers.
  - Personal injury may occur if hands or fingers are pinched. If the product is tilted too much, it may fall, causing damage or injury.

Using Remote Control

ENGLISH

The descriptions in this manual are based on the buttons on the remote control. Please read this manual carefully and use the TV correctly.

To replace batteries, open the battery cover, replace batteries (1.5 V AAA) matching the ⊕ and ⊖ ends to the label inside the compartment, and close the battery cover. To remove the batteries, perform the installation actions in reverse.

Make sure to point the remote control toward the remote control sensor on the TV.

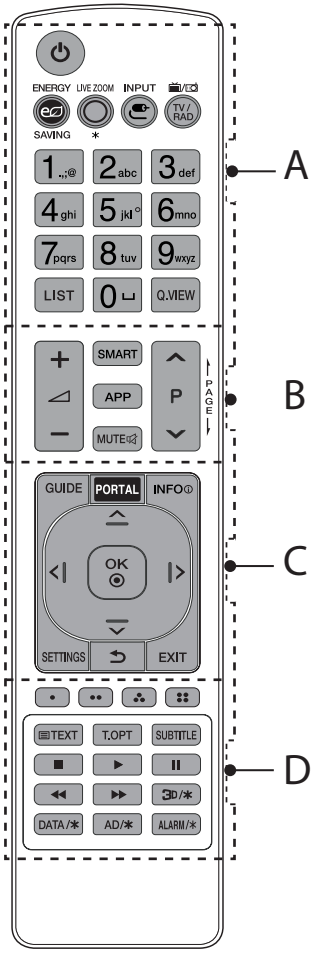

(Some buttons and services may not be provided depending on models or regions.)

* **To use the button, press and hold for more than 3 seconds.**

(POWER) Turns the TV on or off.
ENERGY SAVING Adjusts the brightness of the screen to reduce energy consumption.
LIVE ZOOM* By zooming in on the selected area, you can view it in full screen.
INPUT Changes the input source.
TV/RAD Selects Radio, TV and DTV programme.
Number buttons Enters numbers.
Alphabet buttons Enters letters.
LIST Accesses the saved programme list.
(Space) Opens an empty space on the screen keyboard.
Q.VIEW Returns to the previously viewed programme.

+ − Adjusts the volume level.
SMART Accesses the Home menu.
SMART* Shows the previous history.
APP Shows the previous history.
MUTE Mutes all sounds.
MUTE* Accesses the **Accessibility** menu.
P Scrolls through the saved programmes.
PAGE Moves to the previous or next screen.

GUIDE Shows programme guide.
PORTAL Displays and removes hotel interactive menu.
INFO Views the information of the current programme and screen.
Navigation buttons (up/down/left/right) Scrolls through menus or options.
OK Selects menus or options and confirms your input.
SETTINGS Accesses the main menus.
(BACK) Returns to the previous level.
EXIT Clears on-screen displays and return to TV viewing.

Coloured buttons These access special functions in some menus. (: Red, : Green, : Yellow, : Blue)
Teletext buttons (TEXT, T.OPT) These buttons are used for teletext.
SUBTITLE Recalls your preferred subtitle in digital mode.
Control buttons (■, ▶, ❚❚, ◀◀, ▶▶) Controls media contents.
3D/* This function is not supported.
DATA/* Selects the MHP TV menu source.
AD/* Audio descriptions function will be enabled.
ALARM/* Sets the alarm function.

⚠ CAUTION

- Do not mix new batteries with old batteries. This may cause the batteries to overheat and leak.
- Failure to match the correct polarities of the battery may cause the battery to burst or leak, resulting in fire, personal injury, or ambient pollution.
- This apparatus uses batteries. In your community there might be regulations that require you to dispose of these batteries properly due to environmental considerations. Please contact your local authorities for disposal or recycling information.
- Batteries inside or inside the product shall not be exposed to excessive heat such as sunshine, fire or the like.
- In Analogue TV and some countries, some remote control buttons may not work.

Troubleshooting

The software version can be updated for improvement in performance.

Customer needs to ensure the compatibility of customer's equipment with LGE software. If needed, please consult with LGE and upload revised software version according to the guidance provided by LGE.

Cannot control the TV with the remote control.

- Check the remote control sensor on the product and try again.
- Check if there is any obstacle between the product and the remote control.
- Check if the batteries are still working and properly installed (⊕ to ⊕, ⊖ to ⊖).

No image display and no sound is produced.

- Check if the product is turned on.
- Check if the power cord is connected to a wall outlet.
- Check if there is a problem in the wall outlet by connecting other products.

The TV turns off suddenly.

- Check the power control settings. The power supply may be interrupted.
- Check if the auto-off function is activated on the settings related time.
- If there is no signal while the TV is on, the TV will turn off automatically after 15 minutes of inactivity.

When connecting to the PC (HDMI/RGB/DVI(Depending on model)), no signal is detected.

- Turn the TV off/on using the remote control.
- Reconnect the RGB/HDMI cable.
- Restart the PC with the TV on.

Abnormal display

- If the product feels cold to the touch, there may be a small "flicker" when it is turned on. This is normal, there is nothing wrong with product.
- This panel is an advanced product that contains millions of pixels. You may see tiny black dots and/or brightly coloured dots (red, blue or green) at a size of 1 ppm on the panel. This does not indicate a malfunction and does not affect the performance and reliability of the product. This phenomenon also occurs in third-party products and is not subject to exchange or refund.
- You may find different brightness and colour of the panel depending on your viewing position(left/right/top/down).
  This phenomenon occurs due to the characteristic of the panel. It is not related with the product performance, and it is not malfunction.
- Displaying a still image for a prolonged period of time may cause image sticking. Avoid displaying a fixed image on the TV screen for a long period of time. This phenomenon also occurs in third-party products and is not subject to exchange of refund.

Generated sound

- "Cracking" noise: A cracking noise that occurs when watching or turning off the TV is generated by plastic thermal contraction due to temperature and humidity. This noise is common for products where thermal deformation is required.
- Electrical circuit humming/panel buzzing: A low level noise is generated from a high-speed switching circuit, which supplies a large amount of current to operate a product. It varies depending on the product. This generated sound does not affect the performance and reliability of the product.

⚠ CAUTION

- When cleaning the product, be careful not to allow any liquid or foreign objects to enter the gap between the upper, left or right side of the panel and the guide panel. (Depending on model)

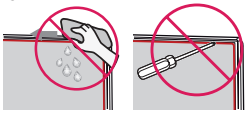

- Make sure to wring any excess water or cleaner from the cloth.
- Do not spray water or cleaner directly onto the TV screen.
- Make sure to spray just enough of water or cleaner onto a dry cloth to wipe the screen.

Software Download Information

• Use this information for UU640C series.
You can download the SuperSign Software and manual from LG Electronics website.

http://partner.lge.com

Software
LGSuperSignControlPlus_vX.X.X.zip
LGSuperSignCMS_setup_vX.X.X.zip
LGSimpleEditor_setup_vX.X.X.zip
Manual
SuperSignControlPlus_manual_vX.X.X.zip
LGSuperSignCMS_Manual_vX.X.X.zip
LGSimpleEditor_Manual_vX.X.X.zip

Specifications

(Depending on country)

Broadcasting Specifications		
	Digital TV	Analogue TV
Television system	DVB-T/T2[1] DVB-T/T2/C/S/S2[2]	PAL B/B, PAL B/G, PAL D/K, PAL-I SECAM B/G, SECAM D/K NTSC-M
Programme Coverage	VHF, UHF C-Band[2], Ku-Band[2]	VHF, UHF, CATV
Maximum number of storable programmes	ATV & DVB-T/T2 : 3,000 DVB-S/S2 : 6,000	
External antenna impedance	75 Ω	
CI Module (W x H x D)	100.0 mm x 55.0 mm x 5.0 mm	

1 Only DVB-T2 support models. (Despite DVB-T2 Model, DVB-T/T2 does not apply in Philippine)

2 Only DVB-T2/C/S2 support models.

Wireless module (LGSBWAC72) specifications	
Wireless LAN (IEEE 802.11a/b/g/n/ac)	
Frequency Range	Output Power (Max.)
2400 to 2483.5 MHz	14 dBm
5150 to 5725 MHz	16.5 dBm
5725 to 5850 MHz (Not for EU)	11.5 dBm
Bluetooth	
Frequency Range	Output Power (Max.)
2400 to 2483.5 MHz	8.5 dBm

As band channels can vary per country, the user cannot change or adjust the operating frequency. This product is configured for the regional frequency table.

For consideration of the user, this device should be installed and operated with a minimum distance of 20 cm between the device and the body.

"IEEE 802.11ac" is not available in all countries.

Audio

Problem	Solution
No sound is produced while images are displaying.	• Press ◿ + or - button. • Check if the sound is muted by pressing MUTE. • Scroll to other channels. There may a problem with the broadcast. • Check if the audio cables are connected properly.
One of the speakers produce noises or does not produce sound.	• A change in ambient humidity or temperature may result in an unusual noise when the product turns on or off. • There is no problem with your product.

Video

Problem	Solution
An image displays in black and white or the colour quality is poor.	• Adjust the colour setting in the PICTURE menu. • Keep a sufficient distance between this product and other electronics products. • Scroll to other channels. There may a problem with the broadcast.
Horizontal or vertical bars appears or images blur	• Check if there are local interferences such as an electrical appliance or power tool.
Lines or streaks appear on images	• Check the antenna or aim the antenna to the proper direction.
Afterimages (ghosts) appear when the product turns off	• Pixels may have been damaged from a fixed image displayed for a long time (image burn). Use a screen saver to prevent the pixel damage on the screen.
The power is on but the screen appears extremely dark.	• Adjust the brightness and contrast in the PICTURE menu.
"No Signal" appears on the screen.	• Check if the signal cable is connected between the TV and products properly. • Check the selected input source by pressing INPUT.
Thin lines appear in the background of the screen.	• Check the video cable connections.
The reception on some channels is poor	• Scroll to other channels. There may a problem with the broadcast. • The station signal may be weak. Aim the antenna to the proper direction. • Check if there is local interference such as an electrical appliance or power tool.

HDMI/DVI[1]-DTV supported mode

Resolution	Horizontal Frequency (kHz)	Vertical Frequency (Hz)
640 x 480p	31.469	59.94
	31.5	60.00
720 x 480p	31.47	59.94
	31.5	60.00
720 x 576p	31.25	50.00
1280 x 720p	44.96	59.94
	45	60.00
	37.5	50.00
1920 x 1080i	28.125	50.00
	33.72	59.94
	33.75	60.00
1920 x 1080p	26.97	23.976
	27.00	24.000
	33.71	29.97
	33.75	30.00
	56.25	50.00
	67.432	59.94
	67.5	60.00
	135	120
	134.86	119.88
	112.5	100
3840 x 2160p	53.95	23.98
	54	24.00
	56.25	25.00
	61.43	29.97
	67.5	30.00
	112.5	50.00
	134.865	59.94
	135	60.00
4096 x 2160p	53.95	23.98
	54	24.00
	56.25	25.00
	61.43	29.97
	67.5	30.00
	112.5	50.00
	134.865	59.94
	135	60.00

1 Except for UU64*

HDMI/DVI[1]-PC supported Mode

- PC audio is not supported.
- Use HDMI IN 1 for PC mode. (Depending on model)

Resolution	Horizontal Frequency (kHz)	Vertical Frequency (Hz)
640 x 350	31.468	70.09
720 x 400	31.469	70.08
640 x 480	31.469	59.94
800 x 600	37.879	60.31
1024 x 768	48.363	60.00
1360 x 768	47.712	60.015
1152 x 864	54.348	60.053
1280 x 1024	63.981	60.020
1920 x 1080	67.5	60
	135	120
3840 x 2160	54	24.00
	56.25	25.00
	67.5	30.00
4096 x 2160	53.95	23.97
	54	24

1 Except for UU64*

Component port connecting information

(Depending on model)

Component ports on the TV	Y	P_B	P_R
Video output ports on DVD player	Y	P_B	P_R
	Y	B-Y	R-Y
	Y	Cb	Cr
	Y	Pb	Pr

Signal	Component
480i / 576i	O
480p / 576p	O
720p / 1080i	O
1080p	O (Only 50 Hz / 60 Hz)

Supported Photo Formats

File Format	Format	Resolution
.jpeg, .jpg, .jpe	JPEG	Minimum: 64 (W) x 64 (H) Maximum (Normal Type): 15,360 (W) x 8,640 (H) Maximum (Progressive Type): 1,920 (W) x 1,440 (H)
.png	PNG	Minimum: 64 (W) x 64 (H) Maximum: 5,760 (W) x 5,760 (H)
.bmp	BMP	Minimum: 64 (W) x 64 (H) Maximum: 1,920 (W) x 1,080 (H)

Supported Audio Formats

File Format	Item	Info
.mp3	Bit rate	32 Kbps - 320 Kbps
	Sample freq.	16 kHz - 48 kHz
	Support	MPEG1, MPEG2
	Channels	mono, stereo
.wav	Bit rate	-
	Sample freq.	8 kHz - 96 kHz
	Support	PCM
	Channels	mono, stereo
.ogg	Bit rate	64 kbps - 320 kbps
	Sample freq.	8 kHz - 48 kHz
	Support	Vorbis
	Channels	mono, stereo
.wma	Bit rate	128 kbps - 320 kbps
	Sample freq.	8 kHz - 48 kHz
	Support	WMA
	Channels	up to 6 ch
.flac	Bit rate	-
	Sample freq.	8 kHz - 96 kHz
	Support	FLAC
	Channels	mono, stereo

- The number of supported programmes may vary depending on the sample frequency.

Supported Video Formats

Extension	Codec	
.asf .wmv	Video	VC-1 Advanced Profile (except for WMVA), VC-1 Simple and Main Profiles
	Audio	WMA Standard (except for WMA v1/ WMA Speech)
.avi	Video	Xvid (except 3 warp-point GMC), H.264/ AVC, Motion Jpeg, MPEG-4
	Audio	MPEG-1 Layer I, II, MPEG-1 Layer III (MP3), Dolby Digital, LPCM, ADPCM, DTS
.mp4 .m4v .mov	Video	H.264/AVC, MPEG-4, HEVC
	Audio	Dolby Digital, Dolby Digital Plus, AAC, MPEG-1 Layer III (MP3)
.3gp .3g2	Video	H.264/AVC, MPEG-4
	Audio	AAC, AMR-NB, AMR-WB
.mkv	Video	MPEG-2, MPEG-4, H.264/AVC, VP8, VP9, HEVC
	Audio	Dolby Digital, Dolby Digital Plus, AAC, PCM, DTS, MPEG-1 Layer I, II, MPEG-1 Layer III (MP3)
.ts .trp .tp .mts	Video	H.264/AVC, MPEG-2, HEVC
	Audio	MPEG-1 Layer I, II, MPEG-1 Layer III (MP3), Dolby Digital, Dolby Digital Plus, AAC, PCM
.mpg .mpeg .dat	Video	MPEG-1, MPEG-2
	Audio	MPEG-1 Layer I, II, MPEG-1 Layer III (MP3)
.vob	Video	MPEG-1, MPEG-2
	Audio	Dolby Digital, MPEG-1 Layer I, II, DVD-LPCM
.rm[1] .rmvb[1]	Video	RV30, RV40
	Audio	Realaudio6(cook), AAC LC, HE-AAC
.mkv .mp4 .ts	Video	H.264/AVC, HEVC
	Audio	Dolby Digital, Dolby Digital Plus, AAC

1 Depending on country

Open Source Software Notice Information

To obtain the source code under GPL, LGPL, MPL, and other open source licenses, that is contained in this product, please visit *http://opensource.lge.com*.

In addition to the source code, all referred license terms, warranty disclaimers and copyright notices are available for download.

LG Electronics will also provide open source code to you on CD-ROM for a charge covering the cost of performing such distribution (such as the cost of media, shipping, and handling) upon email request to *opensource@lge.com*. This offer is valid for a period of three years after our last shipment of this product. This offer is valid to anyone in receipt of this information.

Licenses

Supported licenses may differ by model.

HDMI HIGH-DEFINITION MULTIMEDIA INTERFACE

The terms HDMI and HDMI High-Definition Multimedia Interface, and the HDMI Logo are trademarks or registered trademarks of HDMI Licensing Administrator, Inc. in the United States and other countries.

For DTS patents, see *http://patents.dts.com*. Manufactured under license from DTS Licensing Limited. DTS, the Symbol, & DTS and the Symbol together, DTS 2.0 Channel, DTS 2.0+Digital Out, DTS-HD, and DTS Virtual:X are registered trademarks or trademarks of DTS, Inc. in the United States and/or other countries. © DTS, Inc. All Rights Reserved.

Manufactured under license from Dolby Laboratories. Dolby, Dolby Vision, Dolby Audio, Dolby Atmos, and the double-D symbol are trademarks of Dolby Laboratories.

(Depending on model)

CRESTRON connected



Record the model number and serial number of the TV.
Refer to the label on the back cover and quote this information to your dealer when requiring any service.

MODEL _____

SERIAL _____

LG
Life's Good

Quick Start Guide

LED TV
UU64*

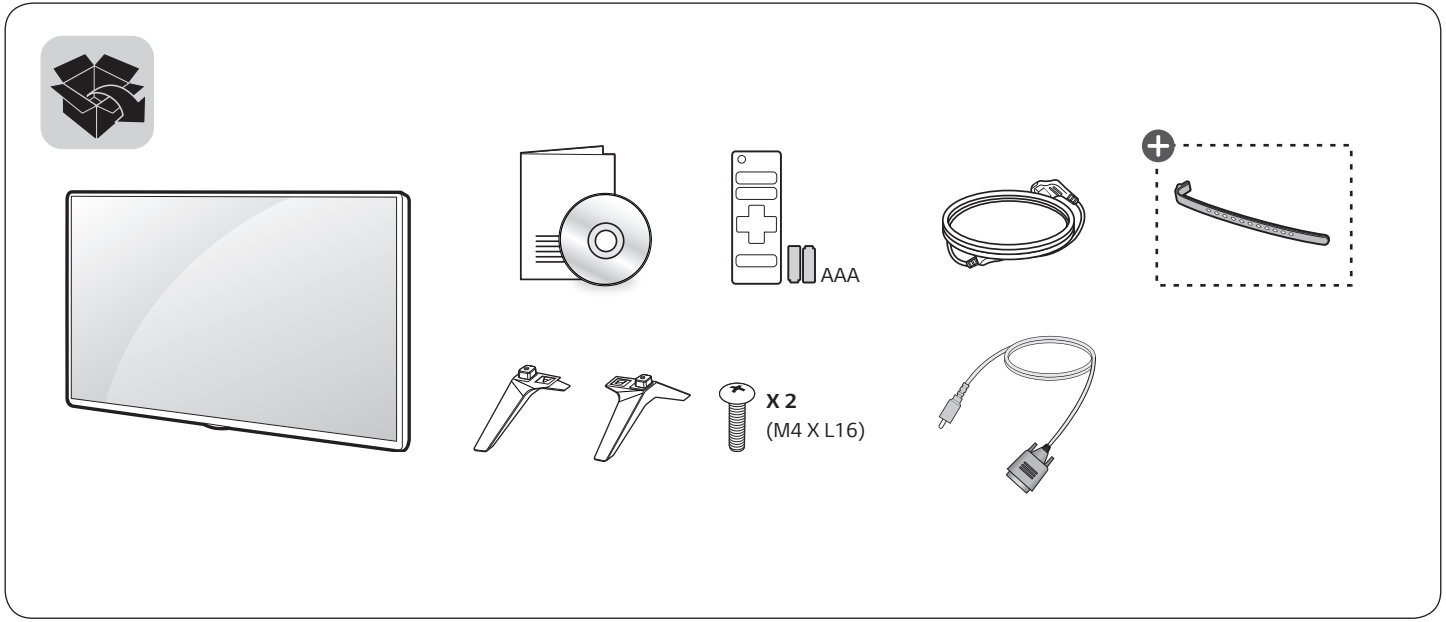

Depending upon country

Depending on model

*Image may vary depending on models

www.lg.com

Unpacking

Check your product box for the following items. If there are any missing accessories, contact the local dealer where you purchased your product. The illustrations in this manual may differ from the actual product and item.



English

- Read **Safety and Reference.**
- For the power supply and power consumption, refer to the label attached to the product.





1

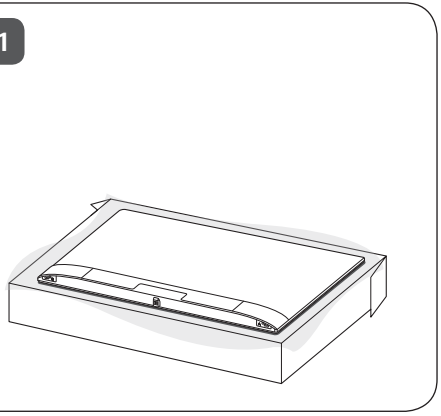

2

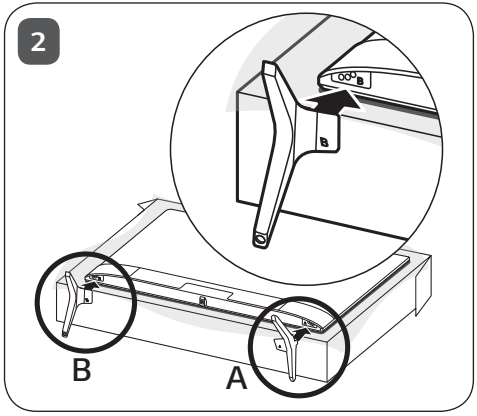

3

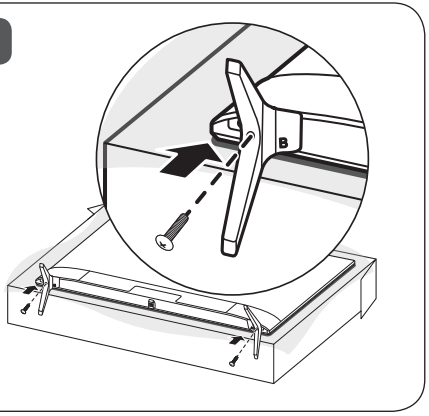

4

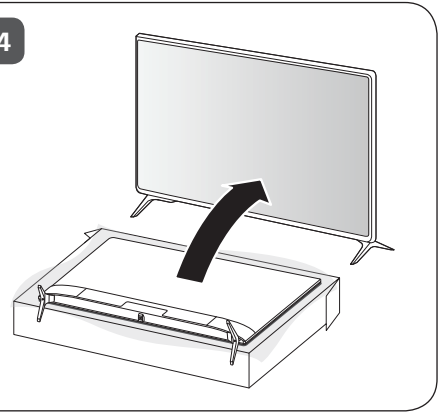

5

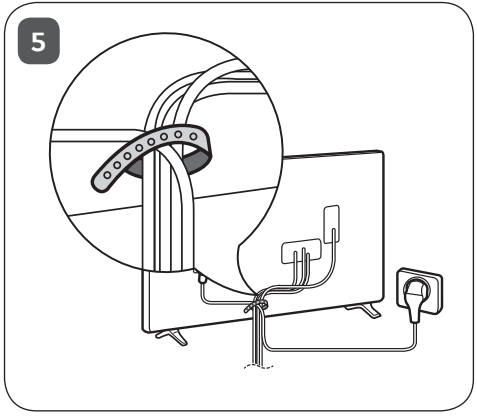

CAUTION

Image shown may differ from your TV.

When attaching the stand to the TV set, place the screen facing down on a cushioned table or flat surface to protect the screen from scratches.

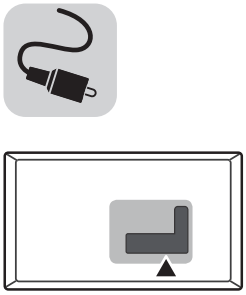

ANTENNA/
CABLE IN

HDMI IN

HDMI IN/ARC

USB IN

H/P OUT

NOTE

Image shown may vary depending on model.
All connection cables & devices shown in the picture are not included along with the TV set.



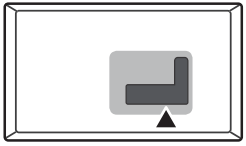

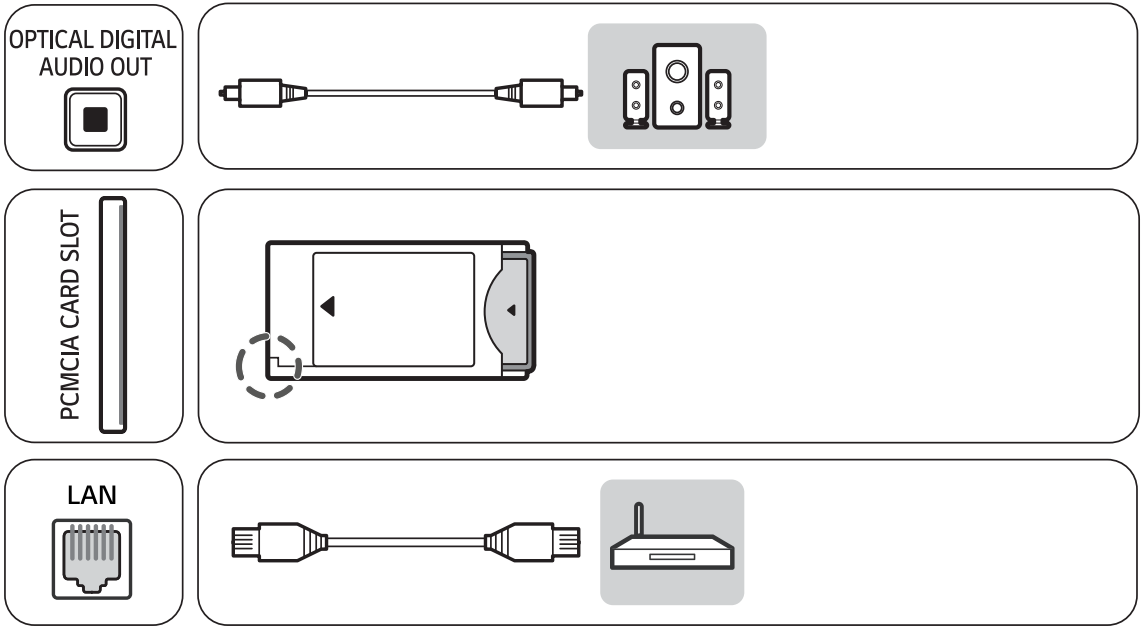

NOTE

Image shown may vary depending on model.
All connection cables & devices shown in the picture are not included along with the TV set.



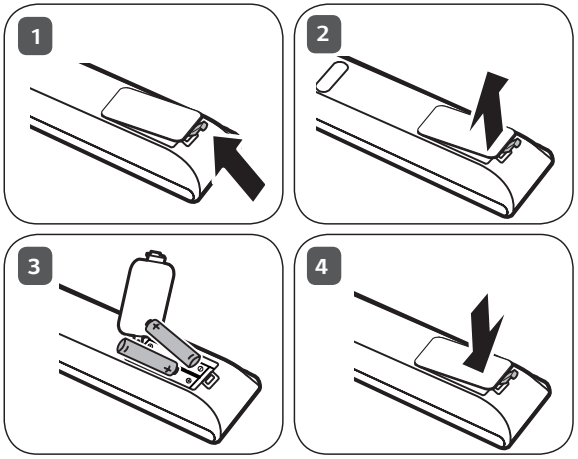

NOTE
Image shown may vary depending on model.





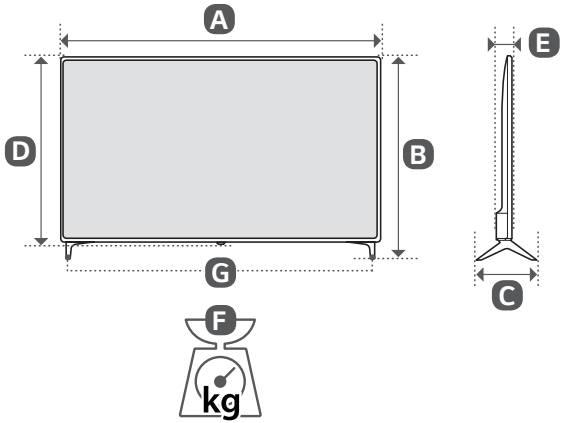

	A	B	C	D	E	F	F-G
	(mm)					(kg)	
43UU640C-TB	977	629	216	575	80.8	8.4	8.3
Power requirement					AC 100-240 V ~ 50 / 60 Hz		

LG
Life's Good

OWNER'S MANUAL

RS-232C

Please read this manual carefully before operating your set and retain it for future reference.

www.lg.com

IR CODES

ENGLISH

- This feature is not available for all models.

Code (Hexa)	Function	Note
08	(POWER)	Remote control Button (Power On/Off)
95	ENERGY SAVING	Remote control Button
AF	LIVE ZOOM*	Remote control Button
0B	INPUT	Remote control Button
F0	TV/RAD	Remote control Button
10-19	Number Key 0-9 Alphabet buttons (Space)	Remote control Button
53	LIST	Remote control Button
1A	Q.VIEW	Remote control Button
02	+	Remote control Button
03	−	Remote control Button
7C	SMART	Remote control Button
B5	APP	Remote control Button
09	MUTE	Remote control Button
00	P PAGE	Remote control Button
01	P PAGE	Remote control Button
AB	GUIDE	Remote control Button
0C	PORTAL	Remote control Button
AA	INFO	Remote control Button
40	^	Remote control Button
41	v	Remote control Button

Code (Hexa)	Function	Note
07	<	Remote control Button
06	>	Remote control Button
44	OK	Remote control Button
43	SETTINGS	Remote control Button
28	(BACK)	Remote control Button
5B	EXIT	Remote control Button
72	•	Remote control Button
71	••	Remote control Button
63	•••	Remote control Button
61	••••	Remote control Button
20	TEXT	Remote control Button
21	T.OPT(T.Option)	Remote control Button
39	SUBTITLE	Remote control Button
B1	■	Remote control Button
B0	▶	Remote control Button
BA	II	Remote control Button
8F	◀◀	Remote control Button
8E	▶▶	Remote control Button
DC	3D/*	Remote control Button
9F	DATA/*	Remote control Button
91	AD/*	Remote control Button
E8	ALARM/*	Remote control Button

EXTERNAL CONTROL DEVICE SETUP

RS-232C Setup

Connect the RS-232C (serial port) input jack to an external control device (such as a computer or an A/V control system) to control the product's functions externally.
Connect the serial port of the control device to the RS-232C jack on the product back panel.

- RS-232C connection cables are not supplied with the product.

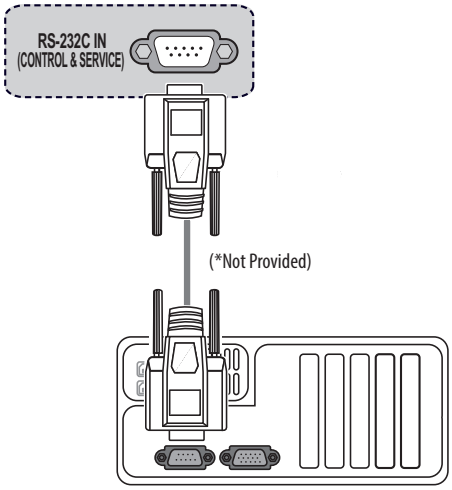

(Depending on model)

Phone jack Type

(Depending on model)

- You need to purchase the phone-jack to RS-232C cable required for the connection between the PC and the TV, which is specified in the manual.

* For other models, connect to the USB port.

* The connection interface may differ from your TV.

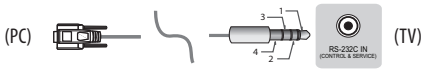

Type of Connector : D-Sub 9-Pin Male

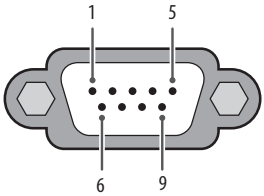

No.	Pin name
1	3.5 V
2	RXD (Receive data)
3	TXD (Transmit data)
4	IR OUT from TV
5	GND
6	No Connection
7	No Connection (5 V available in some models)
8	No Connection
9	No Connection (12 V available in some models)

RS-232C Configurations

7-Wire Configurations (Standard RS-232C cable)

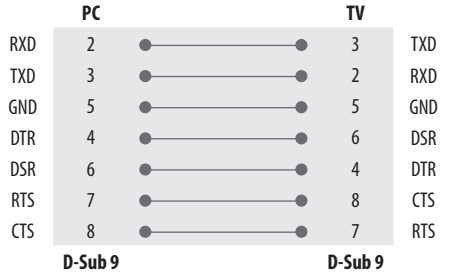

3-Wire Configurations (Not standard)

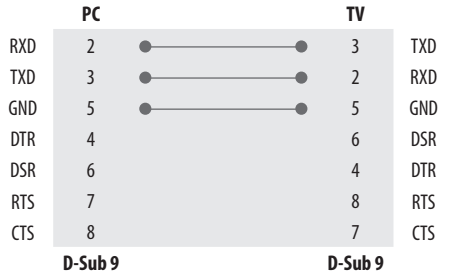

Communication Parameters

- Baud rate: 9,600 bps (UART)
- Data length: 8 bits
- Parity : None
- Stop bit: 1 bit
- Communication code: ASCII code
- Use a crossed (reverse) cable.

Command Reference List

(Depending model)

	Command1	Command2	Data (Hexadecimal)
1 Power	k	a	00 to 01
2 Aspect Ratio	k	c	(See p. 5)
3 Screen Mute	k	d	(See p. 6)
4 Volume Mute	k	e	00 to 01
5 Volume Control	k	f	00 to 64
6 Contrast	k	g	00 to 64
7 Brightness	k	h	00 to 64
8 Colour	k	i	00 to 64
9 Tint	k	j	00 to 64
10 Sharpness	k	k	00 to 32
11 OSD Select	k	l	00 to 01
12 Remote Control Lock Mode	k	m	00 to 01
13 Balance	k	t	00 to 64
14 Colour Temperature	x	u	00 to 64
15 Energy Saving	j	q	(See p. 8)
16 Auto Configuration	j	u	01
17 Equalizer	j	v	(See p. 8)
18 Tune Command	m	a	(See p. 8)
19 Programme Skip/Add	m	b	00 to 01
20 Key	m	c	(See p. 9)
21 Control Backlight	m	g	00 to 64
22 Input select	x	b	(See p. 9)

- During USB operations such as DivX or EMF, all commands except Power(ka) and Key(mc) are not executed and treated as NG.

Transmission / Receiving Protocol

(Depending on Model)

Transmission

[Command1][Command2][ ][Set ID][ ][Data][Cr]

[Command1] : First command to control the TV. (j, k, m or x)
[Command2] : Second command to control the TV.
[Set ID] : You can adjust the set ID to choose desired monitor ID number in option menu. Adjustment range is 1 to 99. When selecting Set ID '0', every connected set is controlled. Set ID is indicated as decimal (1 to 99) on menu and as Hexa decimal (0 x 0 to 0 x 63) on transmission/receiving protocol.
[Data] : To transmit command data. Transmit 'FF' data to read status of command.
[Cr] : Carriage Return
ASCII code '0 x 0D'
[ ] : ASCII code 'space (0 x 20)'

OK Acknowledgement

[Command2][ ][Set ID][ ][OK][Data][x]

* The set transmits ACK (acknowledgement) based on this format when receiving normal data. At this time, if the data is data read mode, it indicates present status data. If the data is data write mode, it returns the data of the PC computer.

Error Acknowledgement

[Command2][ ][Set ID][ ][NG][Data][x]

* The set transmits ACK (acknowledgement) based on this format when receiving abnormal data from non-viable functions or communication errors.

Data 00 : Illegal Code

1 Power (Command: k a)

▶ To control Power On/Off of the set.

Transmission

[k][a][ ][Set ID][ ][Data][Cr]

Data 00 : Off
Data 01 : On

Ack

[a][ ][Set ID][ ][OK/NG][Data][x]

▶ To Show TV is Power On/Off.

Transmission

[k][a][ ][Set ID][ ][FF][Cr]

Ack

[a][ ][Set ID][ ][OK/NG][Data][x]

* Similarly, if other functions transmit '0 x FF' data based on this format, Acknowledgement data feed back presents status about each function.
* OK Ack., Error Ack. and other message may display on the screen when TV is power On.

2 Aspect Ratio (Command: k c) (Main Picture Size)

▶ To adjust the screen format. (Main picture format) You can also adjust the screen format using the picture settings.

Transmission

[k][c][ ][Set ID][ ][Data][Cr]

Data 01 : 4:3 (Normal screen - Just Scan Off)
Data 02 : 16:9 (Wide screen - Just Scan Off)
Data 06 : Original (Just Scan Off)
Data 09 : Just Scan

Ack

[c][ ][Set ID][ ][OK/NG][Data][x]

* Using the PC input, you select either 16:9 or 4:3 screen aspect ratio.

3 Screen Mute (Command: k d)

▶ To select screen mute on/off.

Transmission

[k][d][ ][Set ID][ ][Data][Cr]

Data 00 : Screen mute off (Picture on) / Video mute off

Data 01 : Screen mute on (Picture off)

Data 10 : Video mute on

Ack

[d][ ][Set ID][ ][OK/NG][Data][x]

* In case of video mute on only, TV will display On Screen Display (OSD). But, in case of Screen mute on, TV will not display OSD.

4 Volume Mute (Command: k e)

▶ To control volume mute on/off.
You can also adjust mute using the mute button on remote control.

Transmission

[k][e][ ][Set ID][ ][Data][Cr]

Data 00 : Volume mute on (Volume off)

Data 01 : Volume mute off (Volume on)

Ack

[e][ ][Set ID][ ][OK/NG][Data][x]

5 Volume Control (Command: k f)

▶ To adjust volume.
You can also adjust volume with the volume buttons on remote control.

Transmission

[k][f][ ][Set ID][ ][Data][Cr]

Data Min : 00 to Max : 64

* Refer to "Real data mapping".

Ack

[f][ ][Set ID][ ][OK/NG][Data][x]

6 Contrast (Command: k g)

▶ To adjust screen contrast.
You can also adjust contrast in the picture settings.

Transmission

[k][g][ ][Set ID][ ][Data][Cr]

Data Min : 00 to Max : 64

* Refer to "Real data mapping".

Ack

[g][ ][Set ID][ ][OK/NG][Data][x]

7 Brightness (Command: k h)

▶ To adjust screen brightness.
You can also adjust brightness in the picture settings.

Transmission

[k][h][ ][Set ID][ ][Data][Cr]

Data Min : 00 to Max : 64

* Refer to "Real data mapping".

Ack

[h][ ][Set ID][ ][OK/NG][Data][x]

8 Colour (Command: k i)

▶ To adjust the screen colour.
You can also adjust colour in the picture settings.

Transmission

[k][i][ ][Set ID][ ][Data][Cr]

Data Min : 00 to Max : 64

* Refer to "Real data mapping".

Ack

[i][ ][Set ID][ ][OK/NG][Data][x]

9 Tint (Command: k j)

▶ To adjust the screen tint.
You can also adjust tint in the picture settings.

Transmission

[k][j][ ][Set ID][ ][Data][Cr]

Data Red : 00 to Green : 64

* Refer to "Real data mapping".

Ack

[j][ ][Set ID][ ][OK/NG][Data][x]

10 Sharpness (Command: k k)

▶ To adjust the screen sharpness.
You can also adjust sharpness in the picture settings.

Transmission

[k][k][ ][Set ID][ ][Data][Cr]

Data Min : 00 to Max : 32

* Refer to "Real data mapping".

Ack

[k][ ][Set ID][ ][OK/NG][Data][x]

11 OSD Select (Command: k l)

▶ To select OSD (On Screen Display) on/off when controlling remotely.

Transmission

[k][l][ ][Set ID][ ][Data][Cr]

Data 00 : Off

Data 01 : On

Ack

[l][ ][Set ID][ ][OK/NG][Data][x]

12 Remote Control Lock Mode (Command: k m)

▶ To lock the front panel controls on the monitor and remote control.

Transmission

[k][m][ ][Set ID][ ][Data][Cr]

Data 00 : Off

Data 01 : On

Ack

[m][ ][Set ID][ ][OK/NG][Data][x]

* If you are not using the remote control, use this mode. When main power is on/off, external control lock is released.
* In the standby mode, if key lock is on, TV will not turn on by power on key of IR & Local Key.

13 Balance (Command: k t)

▶ To adjust balance.
You can also adjust balance in the audio settings.

Transmission

[k][t][ ][Set ID][ ][Data][Cr]

Data L : 00 to R : 64

* Refer to "Real data mapping".

Ack

[t][ ][Set ID][ ][OK/NG][Data][x]

14 Colour Temperature (Command: x u)

▶ To adjust Colour Temperature. You can also adjust Colour Temperature in the picture settings.

Transmission

[x][u][ ][Set ID][ ][Data][Cr]

Data Warm: 00 to Cool:64

* Refer to "Real data mapping".

Ack

[u][ ][Set ID][ ][OK/NG][Data][x]

15 Energy Saving (Command: j q)

► To reduce the power consumption of the TV. You can also adjust Energy Saving in picture settings.

Transmission

[j][q][ ][Set ID][ ][Data][Cr]

Power Saving Function					Level				Description
7	6	5	4		3	2	1	0	
0	0	0	0	Low Power	0	0	0	0	Off
0	0	0	0	Low Power	0	0	0	1	Minimum
0	0	0	0	Low Power	0	0	1	0	Medium
0	0	0	0	Low Power	0	0	1	1	Maximum
0	0	0	0	Low Power	0	1	0	1	Screen Off
0	0	0	0	Low Power	0	1	0	0	Auto

► 'Auto' is available in TV that supports 'Intelligent Sensor'.

Ack

[q][ ][Set ID][ ][OK/NG][Data][x]

16 Auto Configuration (Command: j u) (Only RGB support model)

► To adjust picture position and minimize image shaking automatically. It works only in RGB (PC) mode.

Transmission

[j][u][ ][Set ID][ ][Data][Cr]

Data 01 : To set

Ack

[u][ ][Set ID][ ][OK/NG][Data][x]

17 Equalizer (Command : j v)

► To adjust equalizer.

Transmission

[j][v][ ][Set ID][ ][Data][Cr]

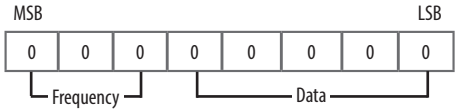

7	6	5	Frequency	4	3	2	1	0	Step
0	0	0	1st Band	0	0	0	0	0	0 (decimal)
0	0	1	2nd Band	0	0	0	0	1	1 (decimal)
0	1	0	3rd Band	...	...	...	...	...	...
0	1	1	4th Band	1	0	0	1	1	19 (decimal)
1	0	0	5th Band	1	0	1	0	0	20 (decimal)

Ack

[v][ ][Set ID][ ][OK/NG][Data][x]

18 Tune Command (Command: m a)

► Select channel to following physical number.

Transmission

[m][a][ ][Set ID][ ][Data 00][ ][Data 01][ ][Data 02][Cr]

Data 00 : High channel data

Data 01 : Low channel data

ex. No. 47 ⟶ 00 2F (2FH)

No. 394 ⟶ 01 8A (18AH),

DTV No. 0 ⟶ Don't care

Data 02 : [Antenna]

0 x 00 : Analogue Main

0 x 10 : DTV Main

0 x 20 : Radio

[Cable]

0 x 80 : Analogue Main

0 x 90 : DTV Main

0 x A0 : Radio

[Satellite] (Depending on model)

0 x 40 : DTV Main

0 x 50 : Radio Main

Channel data range

Min : 00 Max : 270F (0 to 9999)

Ack

[a][ ][Set ID][ ][OK/NG][Data][x]

19 Programme Skip/Add (Command: m b)

▶ To set skip status for the current Programme.

Transmission

[m][b][ ][Set ID][ ][Data][Cr]

Data 00 : Skip
Data 01 : Add

Ack

[b][ ][Set ID][ ][OK/NG][Data][x]

20 Key (Command: m c)

▶ To send IR remote key code.

Transmission

[m][c][ ][Set ID][ ][Data][Cr]

Data IR CODES

Ack

[c][ ][Set ID][ ][OK/NG][Data][x]

21 Control Backlight (Command: m g)

▶ To control the backlight.

Transmission

[m][g][ ][Set ID][ ][Data][Cr]

Data Min : 00 to Max : 64

Ack

[g][ ][Set ID][ ][OK/NG][Data][x]

22 Input select (Command: x b) (Main Picture Input)

▶ To select input source for main picture.

Transmission

[x][b][ ][Set ID][ ][Data][Cr]

Data Structure

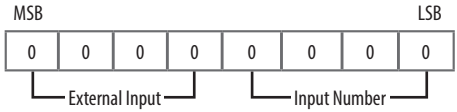

External Input				Data
0	0	0	0	DTV
0	0	0	1	Analogue
0	0	1	0	AV
0	1	0	0	Component
0	1	1	0	RGB
0	1	1	1	HDMI
1	0	0	0	
1	0	0	1	
1	0	1	0	

Input Number				Data
0	0	0	0	Input1
0	0	0	1	Input2
0	0	1	0	Input3
0	0	1	1	Input4

Ack

[b][ ][Set ID][ ][OK/NG][Data][x]

* **Real data mapping**

00 :	Step 0
⋮	
A :	Step 10 (Set ID 10)
⋮	
F :	Step 15 (Set ID 15)
10 :	Step 16 (Set ID 16)
⋮	
64 :	Step 100
⋮	
6E :	Step 110
⋮	
73 :	Step 115
74 :	Step 116
⋮	
CF :	Step 199
⋮	
FE :	Step 254
FF :	Step 255



Record the model number and serial number of the TV.
Refer to the label on the back cover and quote this information to your dealer when requiring any service.

MODEL _____

SERIAL _____