LG

MFL72139842241 2REV00

43NANO81A* 65NANO81A*
50NANO81A* 75NANO81A*
55NANO81A* 86NANO81A*





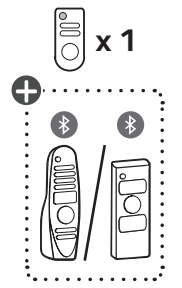

x 1





ⓐ x 4
(M4 x L20)

www.lg.com

PDF

43/50"

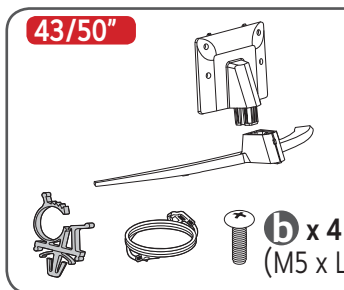

ⓑ x 4
(M5 x L20)

55/65"

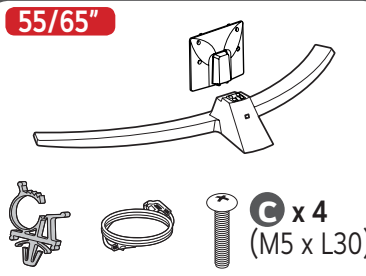

ⓒ x 4
(M5 x L30)

75"

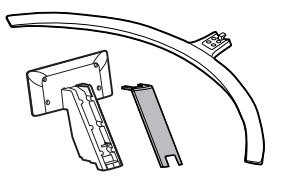

ⓓ x 4
(M5 x L14)

86"

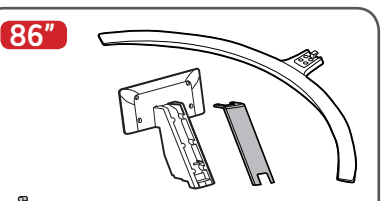

ⓓ x 4
(M5 x L14)



43/50/55"

1

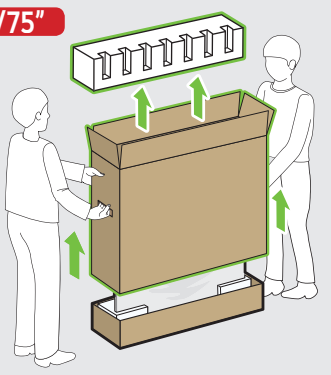

65/75"

1

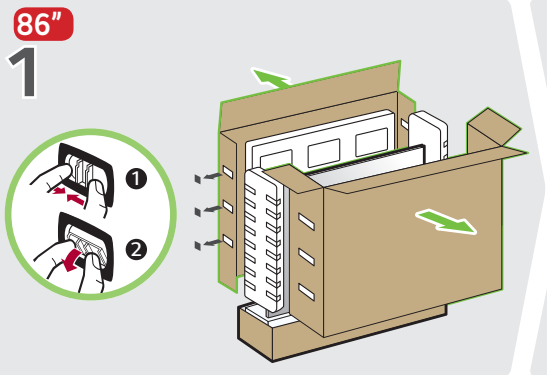

86"

1

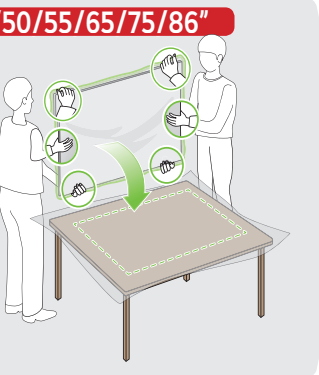

43/50/55/65/75/86"

2

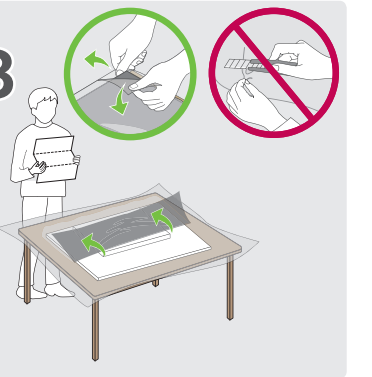

3

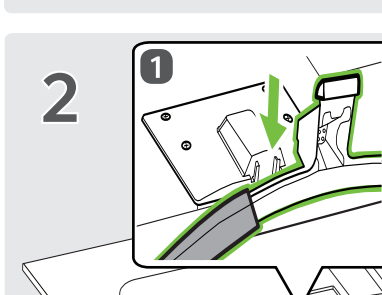

43/50"

1



2

ⓑ x 4



3

ⓐ x 4

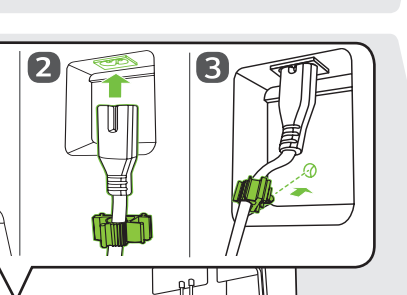

4

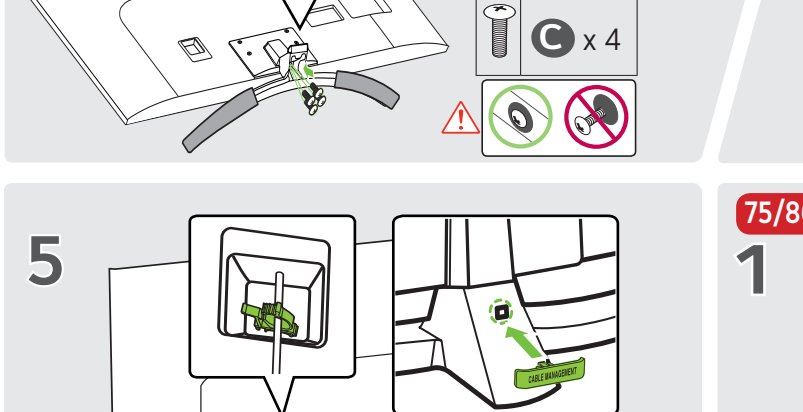

5

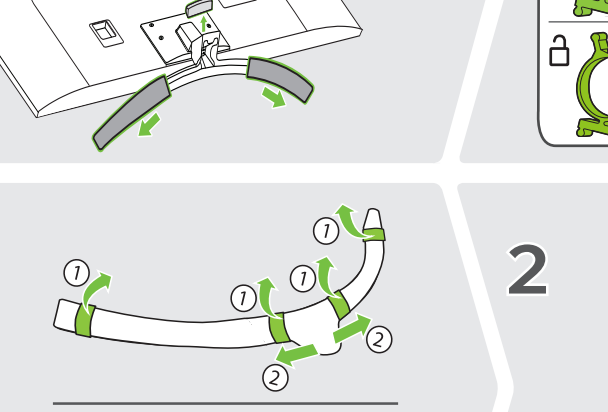

6

55/65"

1



ⓐ x 4

2

3

4

5

75/86"

1

ⓓ x 4

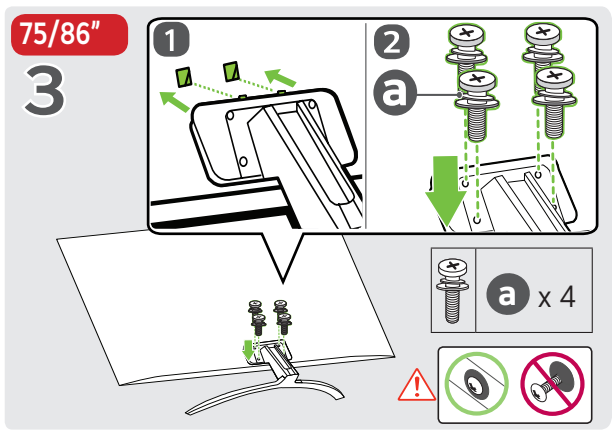

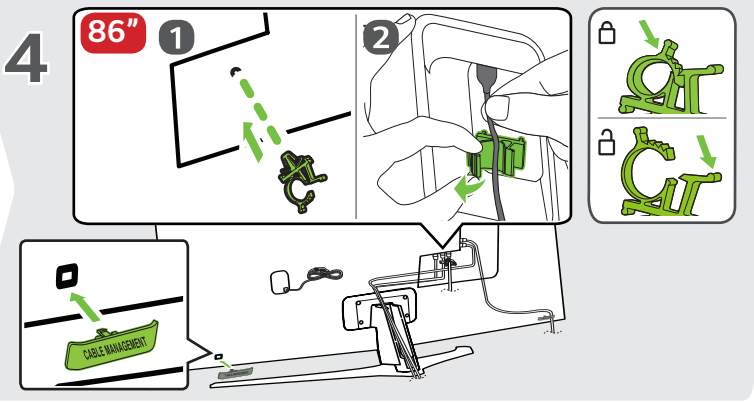

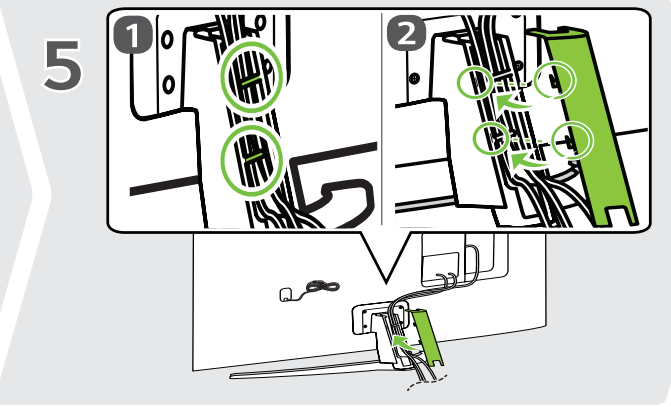

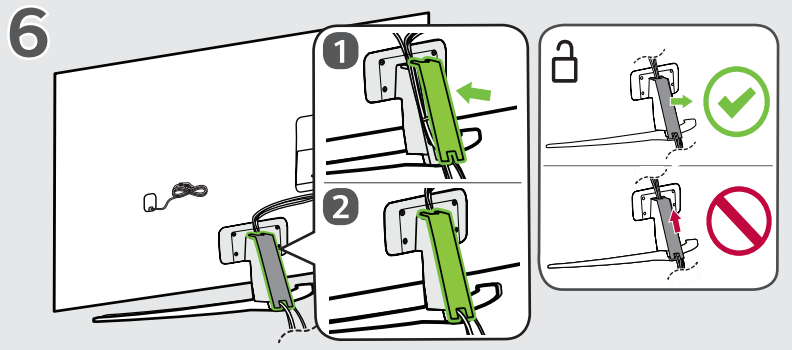

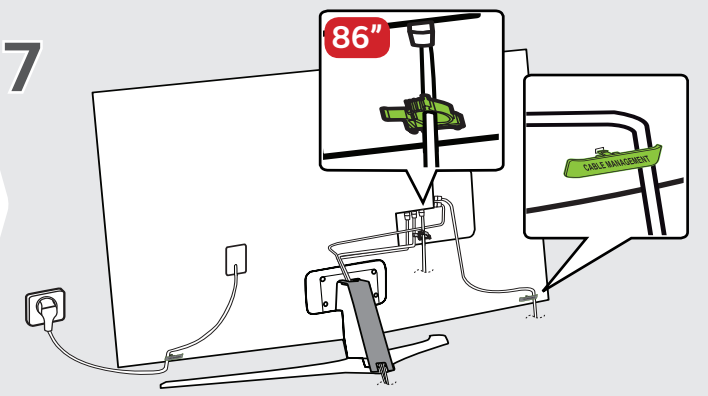

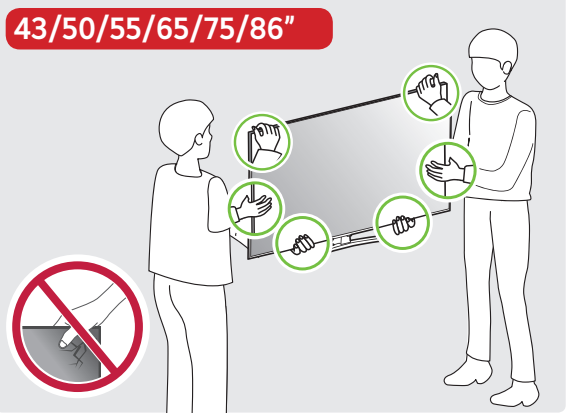

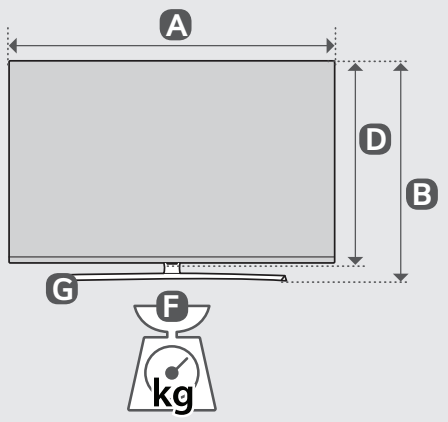

	A	B	C	D	E	F	F - G
	(mm)					(kg)	
43NANO81A*	967	629	249	564	57.1	10.0	8.9
50NANO81A*	1121	703	249	651	57.1	13.2	12.1
55NANO81A*	1235	787	260	715	57.5	15.4	14.0
65NANO81A*	1454	909	340	838	57.7	22.9	21.5
75NANO81A*	1678	1045	378	964	59.9	34.6	31.4
86NANO81A*	1927	1178	425	1104	59.9	48.9	45.2



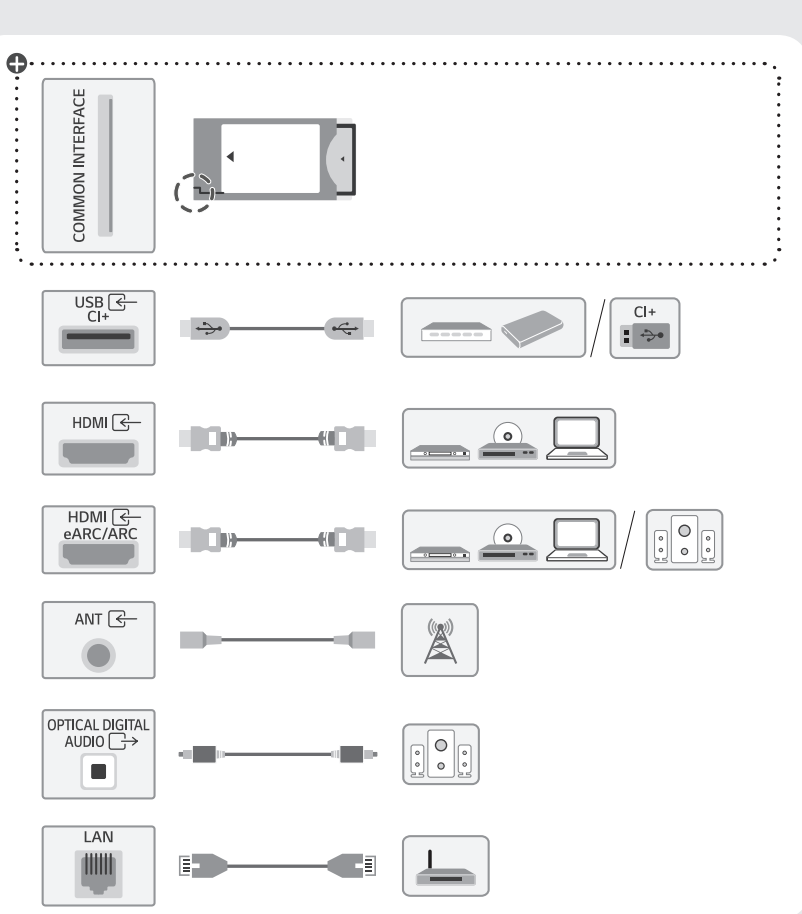

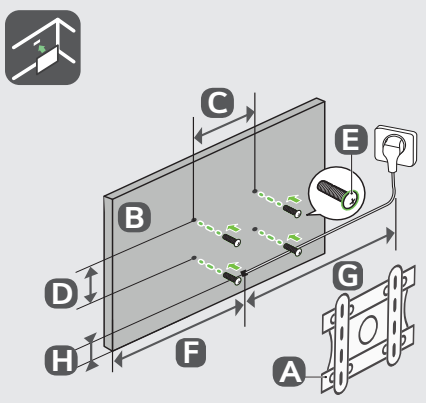

A	B	C x D (mm)	E	F (mm)	G (m)	H (mm)
LSW240B MSW240	43NANO81A*	200 x 200	M6	306	≧ 1.5	214
LSW240B MSW240	50NANO81A*	200 x 200	M6	384		254
WB24GCB MSW240	55NANO81A*	300 x 300	M6	371		230
WB24GCB	65NANO81A*	300 x 300	M6	480		240
WB24GCB	75NANO81A*	400 x 400	M6	559		212
WB24GDB	86NANO81A*	600 x 400	M8	599		215

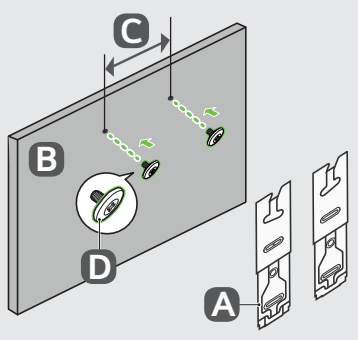

A	B	C (mm)	D
WB21LMB	43NANO81A* 50NANO81A*	200	M6
WB21LMB	55NANO81A* 65NANO81A*	300	M6

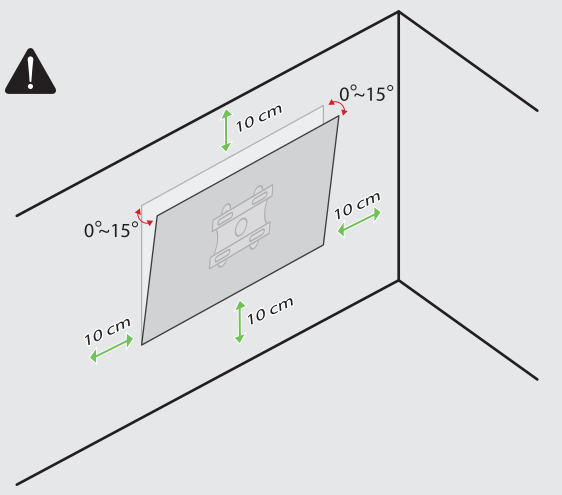

* : 0~9, A~Z