Scan to see the online manual.

OWNER'S MANUAL

MICROWAVE OVEN

Read this owner's manual thoroughly before operating the appliance and keep it handy for reference at all times.

ENGLISH

MVEM1720*

MFL05776714
Rev.00_100126

www.lg.com

Copyright © 2026 LG Electronics. All Rights Reserved

TABLE OF CONTENTS

3 IMPORTANT SAFETY INSTRUCTIONS

3 READ ALL INSTRUCTIONS BEFORE USE
3 WARNING

8 INSTALLATION

8 Product Overview
9 Installation Requirements
10 Before Installing
12 Installing the Microwave Oven

20 OPERATION

20 Control Panel
20 Before Use
22 Quick Start and Stop
22 Manual Cooking
23 Cooking Mode
26 Cookware Guide
27 Cooking Guide

29 SMART FUNCTIONS

29 Smart Diagnosis™ Feature

30 MAINTENANCE

30 Cleaning
31 Replacing Parts

33 TROUBLESHOOTING

33 FAQs
35 Before Calling for Service

36 LIMITED WARRANTY

36 CANADA

PRECAUTIONS TO AVOID POSSIBLE EXPOSURE TO EXCESSIVE MICROWAVE ENERGY

(a) Do not attempt to operate this oven with the door open since open-door operation can result in harmful exposure to microwave energy. It is important not to defeat or tamper with the safety interlocks.

(b) Do not place any object between the oven front face and the door or allow soil or cleaner residue to accumulate on sealing surfaces.

(c) Do not operate the oven if it is damaged. It is particularly important that the oven door close properly and that there is no damage to the: (1) door (bent), (2) hinges and latches (broken or loosened), (3) door seals and sealing surfaces.

(d) The oven should not be adjusted or repaired by anyone except properly qualified service personnel.

IMPORTANT SAFETY INSTRUCTIONS

READ ALL INSTRUCTIONS BEFORE USE

Safety Messages

Your safety and the safety of others are very important.

We have provided many important safety messages in this manual and on your appliance. Always read and follow all safety messages.

This is the safety alert symbol.

This symbol alerts you to potential hazards that can kill or injure you and others. All safety messages will follow the safety alert symbol and either the word WARNING or CAUTION.

These words mean:

WARNING

You may be killed or seriously injured if you do not follow instructions.

CAUTION

You may be injured or cause damage to the product if you do not follow instructions.

All safety messages will tell you what the potential hazard is, tell you how to reduce the chance of injury, and tell you what may happen if the instructions are not followed.

WARNING

WARNING

- To reduce the risk of explosion, fire, death, electric shock, injury or scalding to persons when using this product, follow basic precautions, including the following:

Technical Safety

- This appliance is not intended for use by persons (including children) with reduced physical, sensory or mental capabilities, or lack of experience and knowledge, unless they have been given supervision or instruction concerning use of the appliance by a person responsible for their safety. Children should be supervised to ensure that they do not play with the appliance.
- To reduce the risk of burns, electric shock, fire, injury to persons, or exposure to excessive microwave energy, read all instructions before using the appliance.
- Children must not be allowed to play with accessories or hang down from the door or any part of the oven. Doing so can cause serious injury and damage. As with any appliance, close supervision is necessary when used by children.
- Read and follow the specific PRECAUTIONS TO AVOID POSSIBLE EXPOSURE TO EXCESSIVE MICROWAVE ENERGY found on page 2.
- This appliance must be grounded. Connect only to properly grounded outlet. See **“GROUNDING INSTRUCTIONS”** found on **Installation Requirements** section.
- Use this appliance only for its intended use as described in the manual. Do not use corrosive chemicals or vapors in this appliance. This type of oven is specifically designed to heat, cook, or dry food. It is not designed for industrial or laboratory use.
- To avoid electric shock:
  - Do not operate this appliance if it has a damaged cord or plug, if it is not working properly or if it has been damaged or dropped.

- Do not immerse cord or plug in water. Keep cord away from heated surfaces.
- Do not let cord hang over edge of table or counter.

- To reduce the risk of fire in the oven cavity:
  - Do not overcook food. Carefully attend appliance when paper, plastic, or other combustible materials are placed inside the oven to facilitate cooking.
  - Remove wire twist-ties from paper or plastic bags before placing bag in oven.
  - If materials inside the oven ignite, keep oven door closed, turn oven off, and disconnect the power cord, or shut off power at the fuse or circuit breaker panel.
  - Do not use the cavity for storage purposes. Do not leave paper products, cooking utensils, or food in the cavity when not in use.
- Install or locate this appliance only in accordance with the provided installation instructions.
- Some products such as whole eggs and sealed containers – for example, closed glass jars – are able to explode and should not be heated in this oven.
- Liquids, such as water, coffee, or tea are able to be overheated beyond the boiling point without appearing to be boiling. Visible bubbling or boiling when the container is removed from the microwave oven is not always present.
- **THIS COULD RESULT IN VERY HOT LIQUIDS SUDDENLY BOILING OVER WHEN THE CONTAINER IS DISTURBED OR A SPOON OR OTHER UTENSIL IS INSERTED INTO THE LIQUID.**

  To reduce the risk of injury to persons:
  - Do not overheat the liquid. Stir the liquid both before and halfway through heating it.
  - Do not use straight-sided containers with narrow necks. Use extreme care when inserting a spoon or other utensil into the container.
  - After heating, allow the container to stand in the microwave oven for a short time before removing the container.
- Do not cover or block any openings on the appliance.
- Do not store this appliance outdoors. Do not use this product near water - for example, near a kitchen sink, in a wet basement, near a swimming pool, or similar locations.
- This appliance should be serviced only by qualified service personnel. Contact the nearest authorized service facility for examination, repair, or adjustment.
- When cleaning surfaces of door and oven that comes together on closing the door, use only mild, nonabrasive soaps or detergents applied with a sponge or soft cloth.
- HOT CONTENTS CAN CAUSE SEVERE BURNS. DO NOT ALLOW CHILDREN TO USE THE MICROWAVE. Use caution when removing hot items.
- Microwave oven is to be mounted only above countertop level.

Installation

- This appliance should not be installed by anyone except properly qualified service personnel.
- You will need two people to install this appliance. It is heavy and could cause personal injury if not handled properly.
- Avoid Electric Shock.

  Before you drill into the wall, note where electrical outlets are and where electrical wires might be concealed behind the wall. You could get an electric shock if you contact electrical wires with your drill bit.

  Locate and disconnect the power to any electrical circuits that could be affected by installing this appliance. If you do not disconnect the power, you could get an electric shock.
- This appliance must be grounded.

  If there is an electrical short circuit, grounding reduces the risk of electric shock by providing an escape wire for the electric current. This appliance is equipped with a cord which includes a grounding wire with a grounding plug.

- Place the plug into a properly installed and grounded outlet

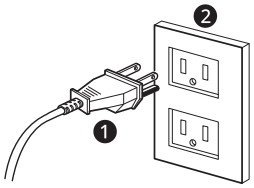

❶ Three-pronged (grounding) plug

❷ Properly polarized and grounded outlet

- Do not use an extension cord.
- Keep the power cord dry and do not pinch or crush it. Failure to follow this instruction may cause a fire hazard.
- Do not, under any circumstances, remove the power supply cord grounding prong.
- If you use the grounding plug improperly, you risk electric shock and/or fire.

  Check with a qualified electrician if you are not sure whether the oven is properly grounded or if you do not completely understand the grounding instructions.
- Do not use a fuse in the neutral or grounding circuit.
- Improper grounding could result in electric shock, fire or other personal injury.

Operation

- Do not use this oven for commercial purposes. It is made for household use only.
- Do not run the oven while it is empty.
- If your oven is dropped or damaged, have it thoroughly checked by a qualified service technician before using it again.
- Take care when the door is opened to avoid injury.
- To avoid improperly cooking some foods:
  - Do not heat any type of baby bottle or baby food. Uneven heating may occur and possibly cause personal injury.
  - Do not heat small-necked containers, such as syrup bottles.
  - Do not deep-fat fry in the microwave oven.
  - Do not attempt home canning in the microwave oven.
- Do not use the oven for the purpose of dehumidification (for example, operating the microwave oven with wet newspapers, clothes, toys, electric devices, plants, soil, pets or any other living matter inside it). The oven must only be used for heating or cooking food. The results of misuse can include safety risks such as fire, burns, or death due to electric shock.
- The appliance and its accessible parts become hot during use. Care should be taken to avoid touching heating elements inside the oven. Children must be kept away unless continuously supervised.
- Do not use recycled paper products. They may contain impurities which may cause sparks and/or fires when used in cooking.
- The door or the outer surface may get hot when the appliance is operating.
- Liquids heated in certain shaped containers (especially cylindrical-shaped containers) may become overheated. The liquid may splash out with a loud noise during or after heating or when adding ingredients (instant coffee, etc.), resulting in harm to the oven and possible injury. In all containers, for best results, stir the liquid several times before heating. Always stir liquid several times between reheatings.
- DO NOT TOUCH HEATING ELEMENTS AND/OR INTERIOR SURFACES OF THE MICROWAVE OVEN.
  - While using the microwave oven or after use or while cleaning the microwave oven or while using the cooktop for a long time, do not allow flammable materials to come into contact with the heating

elements and/or interior surfaces of the microwave oven until they have had sufficient time to cool down. Other surfaces, such as the windows of the microwave oven door, the oven lamp, the cooktop light, and the door open button, can also get hot and may cause burns if not allowed to cool.

Maintenance

- If the door or door seals are damaged, the oven must not be operated until it has been repaired by an authorized service person.
- The oven should be cleaned regularly and any food deposits should be removed. Failure to maintain the oven in a clean condition could lead to deterioration of the surface that could adversely affect the life of the appliance and possibly result in a hazardous situation.
- Do not rinse trays and racks by placing them in water immediately after cooking. This may cause breakage or damage. Improper use could result in damage to the oven.
- Oversized food or oversized metal utensils should not be inserted in a microwave oven as they may create a fire or risk of electric shock.
- Do not clean with metal scouring pads. Pieces can burn off the pad and touch electrical parts involving a risk of electric shock.
- Do not store any materials, other than manufacturer’s recommended accessories, in this oven when not in use.
- Do not cover racks or any other part of the oven with metal foil. This will cause overheating of the oven.
- Do not allow water to spill into the ventilation openings to prevent damage to the internal working parts of the oven. Doing so may cause a fire or create a risk of electric shock.

Microwave Oven

- Must be installed following the provided installation instructions.
- Secure the cord in the cabinet above the oven.
- Do not tamper with the built-in safety switches on the oven door. The oven has several built-in safety switches to make sure the power is off when the door is open.
- Preserve the oven floor:
  - Do not heat the oven floor excessively.
  - Do not allow the gray film on special microwave-cooking packages to touch the oven floor. Put the package on a microwavable dish.
  - Do not cook anything directly on the oven floor or turntable. Use a microwavable dish.
- Keep a browning dish at least 3/16 inch above the oven floor. Carefully read and follow the instructions for the browning dish. If you use a browning dish incorrectly, you could damage the oven floor.

Ventilation

- Burn Hazard: If a range or cooktop located below the microwave is operating, use caution when operating the microwave. **External components of the microwave may become very hot and cause burns or other injury if touched**.
- Clean Ventilating Hoods Frequently – Grease should not be allowed to accumulate on the hood or filter.
- When flaming foods under the hood, turn the fan on.
- Use care when cleaning the vent-hood filter. Corrosive cleaning agents, such as lye-based oven cleaners, may damage the filter.
- Suitable for use above both gas and electric cooking equipment 36 inches wide or less.

Radio/TV/Wireless Equipment Interference

- Operating the microwave oven near equipment-such as a radio, TV, wireless LAN, Bluetooth devices, medical equipment, or wireless equipment which uses the same frequency, may cause interference. This interference is not an indication of a defect in the product or its operation. The product is safe to use.
- Do not use medical equipment near the microwave oven, as the interference could affect the medical equipment's operation.
- When there is interference, it may be reduced or eliminated by taking the following measures:
  - Clean the door and the sealing surfaces of the oven.
  - Reorient the receiving antenna of the radio, TV, Bluetooth, or other equipment.
  - Relocate the microwave oven in relation to the radio, TV, Bluetooth, or other equipment.
  - Move the microwave oven away from the receiver.
  - Plug the microwave oven into a different outlet so that the microwave oven and receiver are on different branch circuits

SAVE THESE INSTRUCTIONS

INSTALLATION

Product Overview

Front View

The appearance or components of the appliance may differ from model to model.

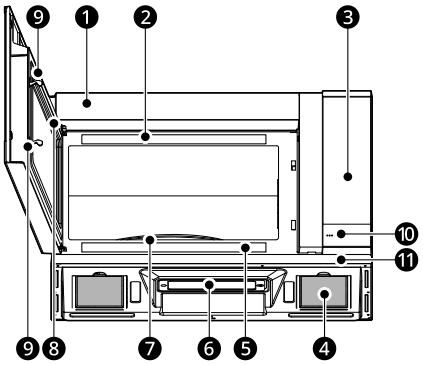

❶ Vent Grille

❷ Location of Model Number

❸ Control Panel

❹ Grease Filter

❺ Cooking Guide

❻ Cooktop Light

❼ Glass Turntable

❽ Window with Metal Shield

❾ Safety Door Lock System

❿ Door Open Button

⓫ Air Guide

Accessories

Accessories will vary depending on the model purchased.

❶ Glass Tray

❷ Rotating Ring

⚠ WARNING

- Do not operate the oven when it is empty or without the glass tray. It is best to leave a glass of water in the oven when not in use. The water will safely absorb all microwave energy, if the oven is accidentally started.

⚠ CAUTION

- To avoid risk of personal injury or property damage, do not use stoneware, metal cookware, or metal rimmed cookware in the oven.
- Keep aluminum foil at least 1 inch from the oven walls and other pieces of foil. Foil can cause arcing if it gets too close to the oven walls during cooking.

NOTE

- This microwave oven is designed for household use only. It is not recommended for commercial use.
- Do not overcook food. The microwave oven can be damaged.
- A beep sounds each time you press a key. A melody signals the end of a timer or a cooking cycle.

Specifications

MVEM1720* Model

- **Power Supply**: 120 V AC, 60 Hz
- **Rated Power Consumption**: 1500 W (Microwave oven with cooktop lamp and ventilation fan)
- **Microwave Output**: Max. 900 W†
- **Rated Current**: 13 A
- **Dimensions (W x H x D)**: 29 7/8" x 16 7/16" x 15 7/8"
- **Capacity of Oven Cavity**: 1.7 cu.ft.
- **Net Weight**: 47 lbs.

† IEC 60705 RATING STANDARD. Specifications are subject to change without prior notice.

Installation Requirements

Installation Location

Make sure you have enough space and support.

- Mount the oven against a flat, vertical wall, so it is supported by the wall. The wall should be constructed of a minimum of 2" x 4" wood studding and 3/8" thick drywall or plaster/lath.
- Attach the 2 lag screws supporting the oven to a vertical, 2" x 4" wall stud.
- DO NOT mount the microwave oven to an island or peninsula cabinet.
- Be sure that the upper cabinet and rear wall structures can support 150 lb. plus the weight of any items you place inside the oven or upper cabinet.
- Locate the oven away from areas with strong drafts, such as near windows, doors, and large heating vents.
- Make sure that you have enough space. See the clearance diagrams in the installation manual for the minimum vertical and horizontal clearances.
- Refer to the **Installation Instructions** for details.

Electrical Requirements

The oven is designed to operate on a standard 120 V/60 Hz household outlet. Be sure that the circuit is at least 15 A or 20 A and the microwave oven is the only appliance on the circuit. It is not designed for 50 Hz or any circuit other than a 120 V/60 Hz circuit. No other electrical appliances or lighting circuits should be on this line. If in doubt, consult a licensed electrician.

Voltage Warning

The voltage used at the wall socket must be the same as specified on the oven name plate located on the back or on the side of the control panel of the oven. Using a higher voltage is dangerous and may result in a fire or other type of accident causing oven damage. Low voltage will cause slow cooking. If the microwave oven does not perform normally in spite of proper voltage, unplug and reconnect the power cord.

Do Not Block Air Vents

All air vents should be kept clear during cooking. If air vents are covered during oven operation the oven may overheat. To prevent damage to the oven, a sensitive safety device detects overheating and automatically turns the oven off. The oven cannot be used until it has cooled sufficiently.

Grounding Instructions

This appliance must be grounded. In the event of an electrical short circuit, grounding reduces the risk of electric shock by providing an escape wire for the electric current. This appliance is equipped with a cord having a grounding wire with a grounding plug. The plug must be plugged into an outlet that is properly installed and grounded.

- Consult a qualified electrician or service person if the grounding instructions are not completely understood, or if doubt exists as to whether the appliance is properly grounded.
  - Do not use an extension cord. If the power supply cord is too short, have a qualified electrician or service person install an outlet near the appliance.
- Ensure that the product is properly grounded before use.

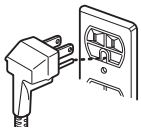

- Keep the electrical power cord dry and do not pinch or crush it in any way.
- For a permanently connected appliance:

  This appliance must be connected to a grounded, metallic, permanent wiring system, or an equipment grounding conductor should be run with the circuit conductors and connected to the equipment grounding terminal or lead on the appliance.

⚠ WARNING

- Improper use of the grounding can result in a risk of electric shock.
- Do not use an extension cord. If the power supply cord is too short, have a qualified electrician or service person install an outlet near the appliance.
- A short power supply cord is provided to reduce the risks resulting from becoming entangled in or tripping over a longer cord.

NOTE

- Because this appliance fits under the cabinet, it has a short power supply cord. See the separate installation instructions for directions on properly placing the cord.

Before Installing

Before You Start

Be sure to read the following safety instructions

Read the entire manual before you begin. The model number plate ❶ is located on the oven front.

The mounting plate ❷ is located in the upper packing material.

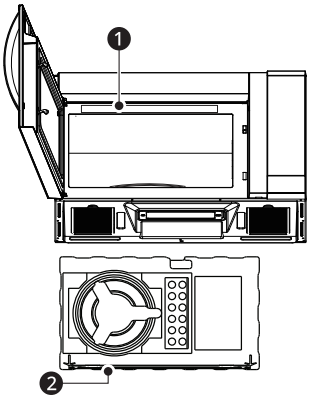

NOTE

- Vent grille appearance varies by model.

Make sure you have enough space and support.

- Mount the oven against a flat, vertical wall, so it is supported by the wall. The wall should be constructed of a minimum of 2" x 4" wood studding and 3/8" thick drywall or plaster/lath.
- Attach the two lag screws supporting the oven to a vertical, 2" x 4" wall stud.
- Do not mount the microwave oven to an island or peninsula cabinet.
- Be sure the upper cabinet and rear wall structures can support 150 lbs., plus the weight of any items you place inside the oven or upper cabinet.
- Locate the oven away from areas with strong drafts, such as windows, doors, and strong heating vents.
- Be sure you have enough space (minimum vertical and horizontal clearance).

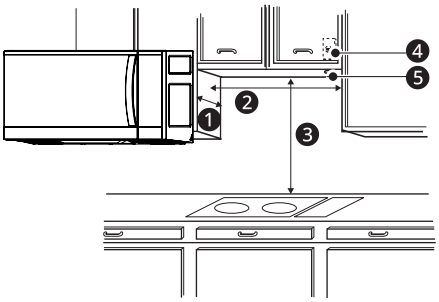

❶ Maximum 13": cabinet depth

❷ Minimum 30": cabinet opening width

❸ Minimum 30": clearance from bottom of cabinet to cooking surface or countertop before installation. (Use templates included with installation instructions.)

❹ Grounded Outlet (inside upper cabinet)

❺ Power Supply Cord Hole

⚠ WARNING

- If you do not mount the oven as instructed, you risk personal injury and/or property damage.
- If your range has cooktop controls in the front, unplug the range before covering the cooktop to prevent risk of fire and damage if the knobs are accidentally activated while installing the OTR.
- The product is heavy. Use at least 2 people when lifting or installing the appliance to avoid injury or product damage.

⚠ CAUTION

- Before you begin installing the oven, place a piece of the carton or other heavy material (a blanket) over the countertop or cooktop to protect it. Do not use a plastic cover. Failure to protect these surfaces could result in property damage.

Parts

Included Parts

NOTE

- Depending on your ventilation requirements, you may not use all of these parts.

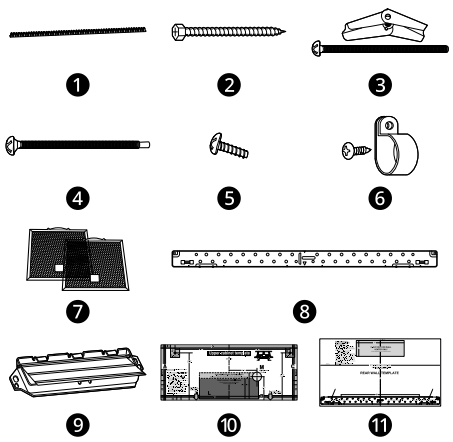

❶ Power cord clamp bushing (1ea): for the cord hole in a metal upper cabinet

❷ 1/4" x 2" lag screw (2ea): for wall stud holes

❸ 1/4" x 3" toggle bolts (2ea): for drywall holes
Spring toggle heads (2ea): for the toggle bolts

❹ 1/4" x 3" bolts (2ea): for securing to the upper cabinet

❺ Tapping screws (2ea): for attaching the damper duct connector

❻ Power cord clamp (1ea) and dark-colored mounting screw (1ea): to hold the power cord

❼ Grease filter (2 ea)

❽ Mounting plate (1ea): for supporting the microwave oven

❾ Back-draft damper: 2 pieces must be assembled as shown. (for roof venting or wall venting installation, not for room venting installation)

❿ Upper cabinet template (1ea)

⓫ Rear wall template (1ea): 1 piece mounting plate only

NOTE

- You need to install at least one lag screw into a 2" x 4" stud and three anchor bolts into the wall.
  The mounting area must meet the 150 lb. weight requirement.

Tools and Materials

You will need the following tools and materials for the installation:

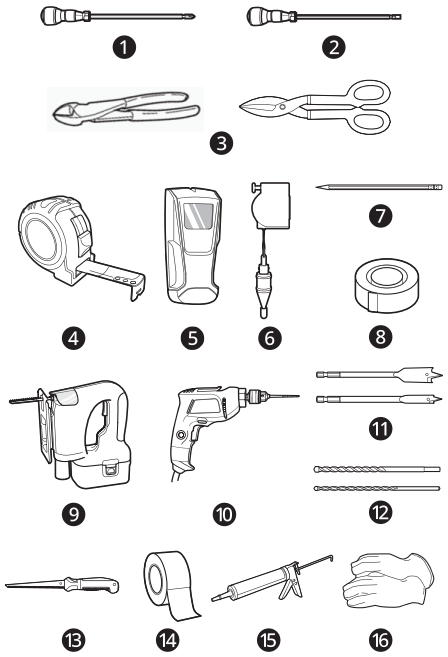

❶ Phillips screwdriver (for the screws)

❷ Flat blade screwdriver (for the toggle bolts)

❸ Small side cutters (nipper) or tin snips

❹ Measuring tape (metal preferred)

❺ Stud finder

❻ Plumb line

❼ Pencil

❽ Clear tape (for taping the templates to the wall)

❾ Saber saw (for cutting vent holes for roof or wall venting)

❿ Electric drill

⓫ 3/8" and 3/4" wood drill bits

⓬ 1/2" and 3/16" drill bits

⓭ Keyhole saw (for the power cord hole)

⓮ Duct tape

⓯ Caulking gun and caulk

⓰ Gloves

NOTE

- If you have brick or masonry walls, you will need special hardware and tools.
- The ductwork you need for the installation is not included. All wall and roof caps must have a back-draft damper (shown in Parts section).
- Wear proper gloves to protect your hands from injury.

Installing the Microwave Oven

Step 1: Prepare the Electrical Connection

1 Locate the grounded electrical outlet ❷ for this oven in the upper cabinet ❶.

NOTE

- The outlet should be on a circuit dedicated to the microwave oven (120 V, 60 Hz., AC only) with a 15 or 20 A fused electrical supply.
- Important: If you do not have the proper wall outlet, you MUST have one installed by a qualified electrician.

2 You will cut the hole ❸ for the power supply cord later when you prepare the wall and upper cabinet in Step 4.

NOTE

- Do not use an extension cord. Keep the power cord dry and do not pinch or crush it.

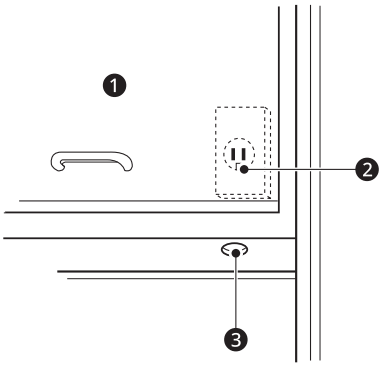

⚠ WARNING

- Avoid electric shock. This appliance must be grounded.
- Improper grounding could result in electric shock or other personal injury.

Do not, under any circumstances, remove the power supply cord grounding prong.

Step 2: Prepare the Venting System

⚠ WARNING

- This oven must be properly vented.

You may vent your ductwork in one of three ways. Do not vent into a wall cavity, an attic, or an unused area.

Room Venting

The oven is located on an inside wall of your house.

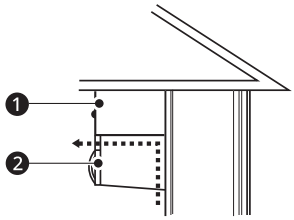

❶ Cabinet

❷ Oven

Wall Venting

The oven is located on an outside wall of your house: 3 1/4" x 10" duct ❸ or minimum 6" diameter round duct ❻.

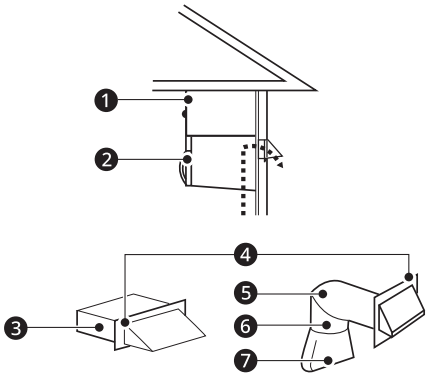

❶ Cabinet

❷ Oven

❸ 3 1/4" x 10" duct

❹ Wall cap

❺ Elbow

❻ Minimum 6" diameter round duct

❼ 3 1/4" x 10" to 6" round duct transition

Roof Venting

The oven is located on an outside wall near the roof: 3 1/4" x 10" duct ❹ or minimum 6" diameter round duct ❺.

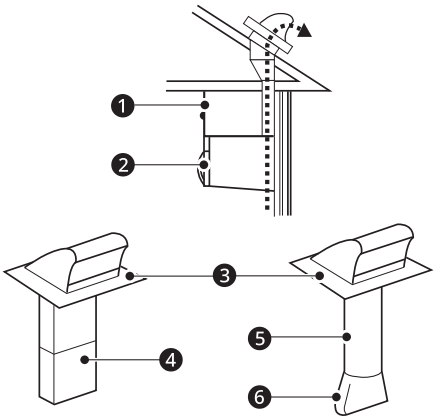

❶ Cabinet

❷ Oven

❸ Roof Cap

❹ 3 1/4" x 10" duct

❺ Minimum 6" diameter round duct

❻ 3 1/4" x 10" to 6" round duct transition

NOTE

- If you choose the rear exhaust method (wall venting or roof venting), be sure there is enough clearance within the wall for the exhaust duct.

When Installing Venting

- Keep the length of the ductwork and the number of elbows to a minimum to ventilate your oven efficiently. See examples in next section.
- Keep the size of the ductwork the same.
- Do not install two elbows together.
- Use duct tape to seal all joints in the duct system.
- Use caulking to seal the exterior wall or roof opening around the cap.
- After installation, check the outside hood opening and operation.
- For the outside hood opening and size refer to the upper cabinet template or rear wall template.

NOTE

- The ductwork you need for outside ventilation is not included with your oven. See the standard ductwork fittings.

Standard Ductwork Fittings

If the existing duct is round, you must use a rectangular-to-round adapter, with a rectangular 3" extension duct installed between the damper assembly and the adapter to prevent the exhaust damper from sticking.

Duct Length

The total length of the duct system, including straight duct, elbows, transitions, and wall or roof caps must not exceed 140 feet.

For best performance, do not use more than three 90 degree elbows, and keep the length as short as possible.

Below are the standard fittings and their equivalent length in feet.

	3 1/4" x 10" to 6" transition = 5 ft
	3 1/4" x 10" roof cap = 24 ft
	3 1/4" x 10" 90° elbow = 25 ft
	90° elbow = 10 ft
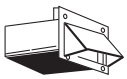	3 1/4" x 10" wall cap = 40 ft
	45° elbow = 5 ft
	3 1/4" x 10" flat elbow = 10 ft

To calculate the equivalent length of each duct piece used, see the examples below.

For 3 1/4" x 10" systems	
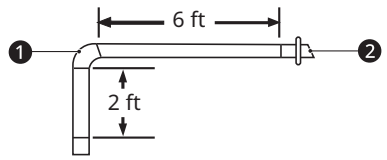	
1/4" x 10" 90° elbow ❶ (1ea) Wall cap ❷(1ea) Straight duct (8 ft) Total length	= 25 ft = 40 ft = 8 ft = 73 ft
For 6" round systems	
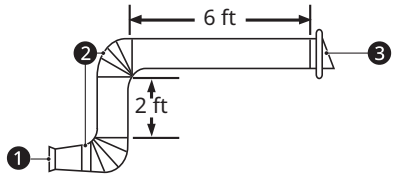	
Transition (1ea) 90°elbows ❷ (2ea) Wall cap ❸ (1ea) Straight duct (8 ft) Total length	= 5 ft = 20 ft = 40 ft = 8 ft = 73 ft

Step 3: Prepare the Venting Blower

Your microwave oven is shipped with the blower assembled for room venting. You need to adjust the blower if you want wall-venting or roof-venting installation.

⚠ WARNING

- Electric shock hazard! Unplug unit before working on it.
- Do not pull or stretch the blower wiring. Pulling and stretching the blower wiring could result in electric shock.
- To avoid risk of property damage, unplug the microwave oven or disconnect the power at the source by removing the fuse or throwing the circuit breaker.
- To avoid risk of personal injury, wear protective gloves when handling the mounting plate.

Installation

1 Remove any shipping materials and parts from inside the microwave oven. Set them aside for later use.

2 Cover the countertop or cooktop with a thick, protective covering to protect it from damage and dirt.

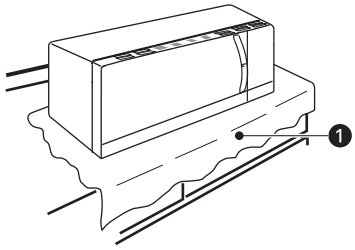

❶ Blanket, cardboard or other covering

NOTE

- If you have a free-standing range, disconnect it, move it onto a piece of cardboard or hardboard and pull it away from the wall, so that you can get closer to the upper cabinet and back wall for easier measuring and drilling.

3 Locate the exhaust adapter, grease filters and hardware packet.

4 At this point, remove any adhesive tape (if there is any), on the exhaust adapter, the grease filters and the power supply cord.

Room-Venting (Recirculating) Installation

This oven is shipped assembled for room-venting.

Wall-Venting Installation

1 Remove one or several blower plate mounting screw(s) ❶ and one or two blower unit mounting screw(s) ❻. Remove the blower plate ❹ from the cabinet.

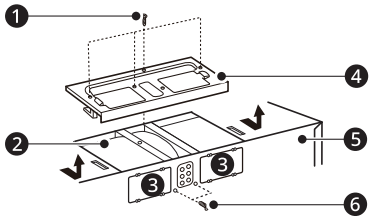

❷ Blower unit
❸ Knockouts
❺ Back plate

2 Carefully lift the blower unit out of the microwave oven.

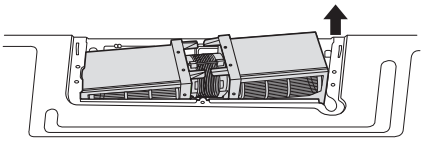

3 Use side cutters or tin snips to cut out and remove the knockouts ❷ from the back plate ❶. Be careful not to distort the back plate. Discard the knockouts.

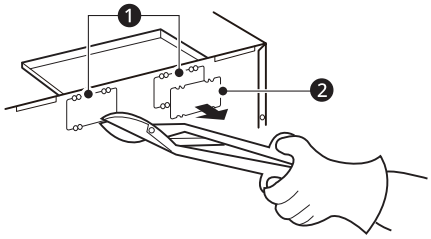

4 To avoid pinching the blower wire, make sure that it is channeled underneath and between the two exhaust ports when they are rotated.

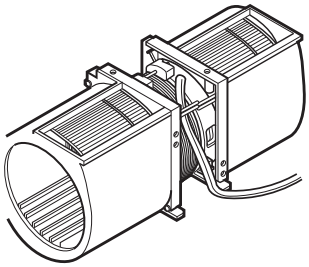

5 Rotate and reinstall the blower unit ❶ so that the exhaust ports ❷ face the rear of the cabinet and are aligned with the rear knockouts. When you insert the blower unit, the blower wire ❸ must be routed as shown.

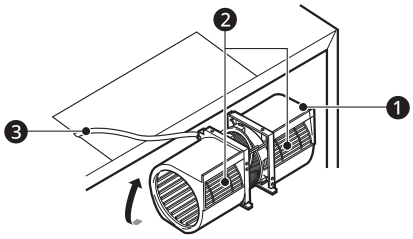

6 Attach the blower plate ❹ to the microwave oven so the blower unit exhaust ports ❸ and blower plate opening are aligned. Attach one or two blower unit mounting screw(s) ❻ and then one or several blower plate mounting screw(s) ❶.

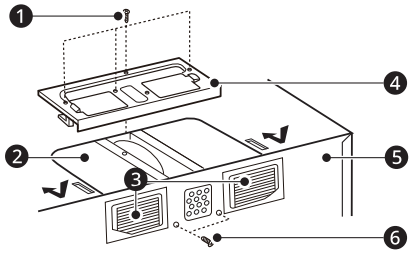

❷ Blower unit
❺ Back plate

7 Insert the tabs on each side of the damper into the holes at the inside rear of the adapter. Attach the exhaust adapter ❶ to the back plate wall side. Push in securely until it is past the top locking tabs ❸ and in the lower locking tabs ❸. Make sure that the damper hinge is at the top and that the damper swings freely.

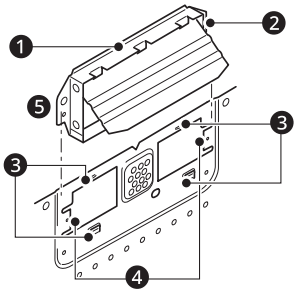

❷ Damper (hinge side up)
❹ Guides on back plate
❺ Slide exhaust adapter into guides on back plate.

Roof-Venting Installation

1 Follow steps 1 and 2 under Wall-Venting Installation.

2 Rotate and reinstall the blower unit ❶ so that the exhaust ports ❷ face the top of the cabinet. When you insert the blower unit, the blower wire ❸ must be routed as shown.

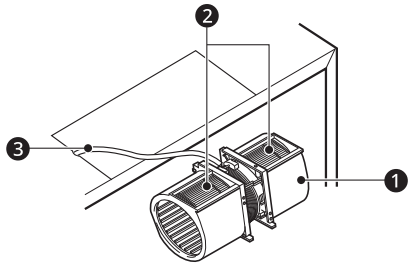

3 Attach blower plate ❹ to microwave oven. Attach the one or two blower unit mounting screw(s) ❻ and then the one or several blower plate mounting screw(s) ❶.

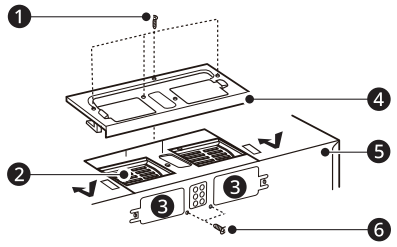

❷ Blower unit
❸ Knockouts
❺ Back plate

4 Insert the tabs on each side of the damper into the holes at the inside rear of the adapter. Attach the exhaust adapter ❶ to the blower plate ❷ with the two tapping screws provided. Make sure that the damper ❸ swings freely.

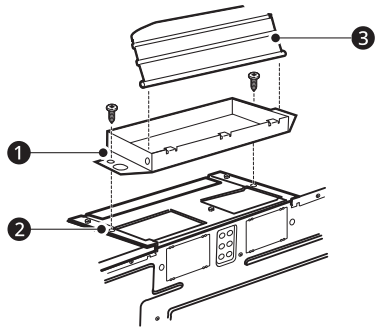

⚠ WARNING

- Fire hazard! Correctly install the vent fan before use.

When changing the vent fan position for wall venting or roof venting:

- Properly align the ventilation fan openings and blower plate knockouts.
- Ventilation fan openings should be completely exposed to the outside.
- After installation, check the air ventilation path. Refer to step 2 for proper vent selection.

Improper installation can cause problems such as:

- Inability to assemble the blower plate or ventilation motor correctly
- Abnormal noise during product operation
- Weak ventilation
- Product overheating and the possibility of product breakdown or fire

Step 4: Prepare the Wall and Upper Cabinet

⚠ WARNING

- To avoid personal injury or property damage, do not attempt to install this microwave oven if you cannot find a wall stud. Consult a carpenter or contractor.

Measure and Attach Templates

1 Using a plumb line and (metal) measuring tape, find and mark the vertical center line on the back wall of the opening.

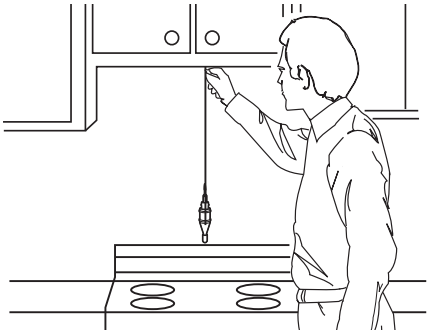

2 Find and mark one or two points where the studs are on the wall. (Studs are normally 16 inches apart.) Then measure and mark the stud locations. If you cannot find any wall studs, consult a local building contractor.

3 Draw a vertical line on the wall at the center of the 30″ wide opening.

NOTE

- Be sure the minimum width is 30 inches.

4 Center the rear wall template ❷ in the space by lining up the plumb line on the wall with the centerline on the template. Then securely tape or tack the rear wall template in place. Make sure the minimum width is 30 inches and that the top of the rear wall template is located a minimum of 30 inches above the cooking surface.
Measure the bottom of the upper cabinet frame. Trim edges A, B, and C on the upper cabinet template ❶ so that the template will fit on the bottom of the upper cabinet. If the upper cabinet has a recessed frame, trim the template so it fits inside the recessed area. If needed, the template can be trimmed inside the printed trim lines, as long as you are able to align the centerline correctly. Align the centerline of the upper cabinet template with the centerline of the rear wall template, then securely tape or tack the upper cabinet template in place.

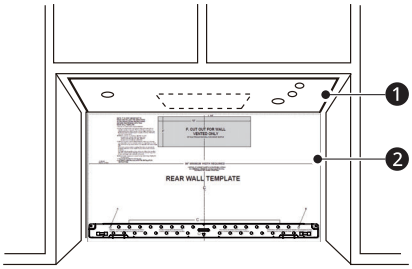

⚠ WARNING

- To avoid risk of personal injury, electric shock or death:

  - Note where electrical outlets and electrical wires are before you drill into the wall.

  - Locate and disconnect power to any electrical circuits that could be affected by installing this oven.
- To avoid risk of personal injury, electric shock or death, cover the edge of the power supply cord hole with the power supply cord bushing.

Drill Holes in Wall and Cabinet

1 Drill holes on the circles. If there is a stud, drill a 3/16" hole for lag screws. If there is no stud, drill a 3/4" hole for toggle bolts. Make sure to use at least 1 lag screw in a stud, and 2 toggle screws in the drywall or the plaster.

2 Drill a 3/8” hole at points J and K on the upper cabinet template.
If the bottom of the upper cabinet is recessed 3/4" or more, you will need 2"x 2" filler blocks ❷ (not included) to provide additional support for the bolts.

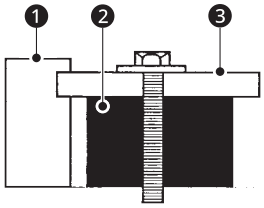

❶ Cabinet front
❸ Cabinet bottom shelf
Mark the center of each filler block and drill a 3/8” diameter hole at the marks.
Align filler blocks ❷ over the two openings in the top of the microwave oven cabinet and attach to the cabinet with masking tape.

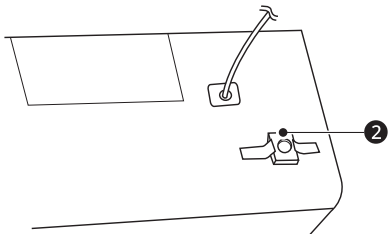

3 Cut or drill a 2" diameter hole at the area marked "M power supply cord hole" on the upper cabinet template. If the upper cabinet is metal, you will need to cover the edge of the hole with the power supply cord bushing (supplied) to prevent damage to the cord from the rough metal edge.

4 Cut out the venting areas (with the saber saw)

- Roof-venting: cut out the shaded area marked L on the upper cabinet template.
- Wall-venting: cut out the shaded area marked F on the rear wall template.
- Room-venting: go to Step 5: Install the Mounting Plate.

5 Complete whichever venting system you have chosen. Use caulking compound to seal the exterior wall or roof opening around the wall cap or roof cap.

Step 5: Install the Mounting Plate

The oven must be connected to at least one wall stud.

1 Center the rear wall template in the space by lining up the plumb line on the wall with the centerline on the template. Then securely tape or tack the rear wall template in place. Make sure the minimum width is 30 inches and that the top of the rear wall template is located a minimum of 30 inches above the cooking surface.

NOTE

- If the cabinets are not plumb, adjust the rear wall template to the cabinets. If the front edge of the cabinet is lower than the back edge, adjust the template to be level with the cabinet front.

2 Drill holes at points A and B. Drill the third hole inside area C, through one of the bottom holes to match the location of a stud. If there is a stud, drill a 3/16 hole for lag screws. If there is no stud, drill a 5/8 hole for toggle bolts. These holes must be used for mounting. If the holes are not used, the installation will not be secure. The installer must use these holes for proper installation. Use toggle bolts through these holes, unless one of them lines up with a stud. Use a lag screw for studs. Make sure to use at least 1 lag screw in a stud, and 2 toggle bolts in the drywall or the plaster.

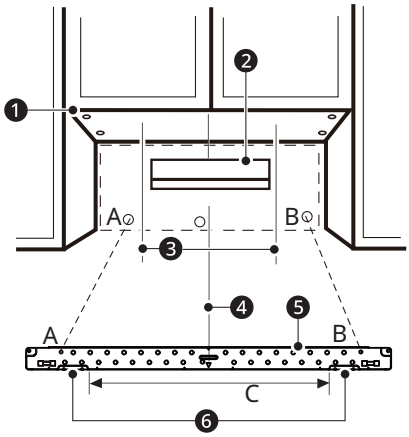

❶ Minimum 66" from the floor
❷ For wall - venting only
❸ Draw lines on studs
❹ Draw center Line
❺ Mounting plate
❻ Support tab

NOTE

- Cut out the shaded area marked F on the rear wall template for wall-venting.

3 Remove the template from the rear wall.

4 Attach the plate to the wall ❺. To use spring toggle head bolts ❹: Remove the toggle wings ❸ from the bolts. Insert the bolts into the mounting plate ❶ and replace the spring toggle head to 3/4 of the length past the bolt ends. Insert the spring toggle head into the holes in the wall to mount the plate. You may pull forward on the plate to help in tightening the toggle bolts. Tighten all bolts.

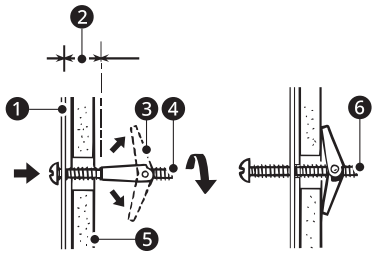

❷ Space more than wall thickness
❻ Bolt end

Step 6: Attach the Oven to the Wall

⚠ WARNING

- To avoid risk of personal injury or property damage, you will need two people to install this microwave oven.

1 Carefully lift the microwave oven and hang it on the support tabs at the bottom of the mounting plate. Reaching through the upper cabinet, thread the power supply cord ❶ through the power supply cord hole ❷ in the bottom of the upper cabinet.

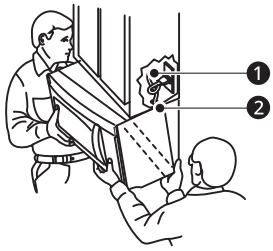

2 Rotate the microwave oven upward so the top of the oven is against the bottom of the upper cabinet or cabinet frame.

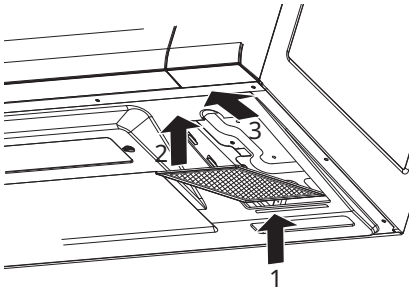

3 Then insert a bolt down through each hole ❶ in the upper cabinet bottom. Tighten the bolts until the gap between the upper cabinet and microwave oven is closed.

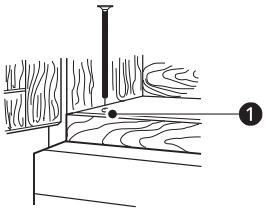

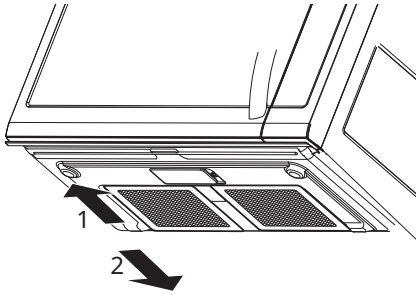

4 Roof venting installation: Install the ductwork through the vent opening in the upper cabinet. Use a caulking gun to seal the exterior roof opening around the exhaust cap.

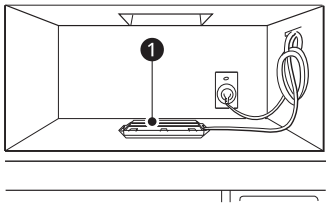

❶ Damper

5 Use the power supply cord clamp ❷ to bundle the power supply cord. Install the power supply cord clamp to the inside of the cabinet using a screw.

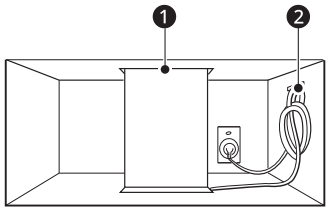

❶ Duct

6 Grasp the filter screen with one hand holding the ring and the other hand holding the opposite end. Insert the end of the filter screen without the ring into the opening and slide towards the side of the microwave oven. Insert the ring end of the filter screen into the opening and slide the entire screen towards the center of the microwave until the screen is securely in position. Repeat for the other filter screen.

OPERATION

Control Panel

The actual control panel may differ from model to model.

Control Panel Features

The appearance or components of the appliance may differ from model to model.

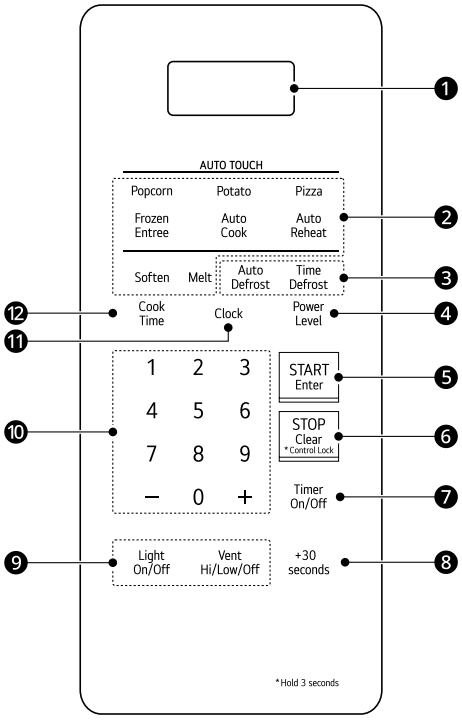

❶ **Display**

Shows the time of day, cooking time settings, and selected cooking functions.

❷ **Quick Cooking**

Press the menu button to start cooking without pressing the **START/Enter** button. The oven automatically adjusts cooking times or power levels based on the amount of food.

❸ **Defrost**

Press the buttons to select preprogrammed defrost mode or to set defrost time.

❹ **Power Level**

Set a cooking power.

❺ **START/Enter**

- Press **START/Enter** to start the oven or enter amounts.

❻ **STOP/Clear**

- Stop cooking or clear all entries.

Control Lock

- Press and hold button for three seconds to activate **Control Lock**.

❼ **Timer On/Off**

Set the kitchen timer.

❽ **+30 seconds**

- Add 30 seconds of cooking time each time you press it.

❾ **Light and Vent Functions**

- Press **Light On/Off** to turn the cooktop light on or off.
- Press **Vent Hi/Low/Off** to set the vent fan speed.

❿ **Number Keys and More/Less**

- **Number Keys**: Press the buttons to set cooking time, power level, quantity, or weight.
- **More/Less**: Adjust the pre-programmed cook time.
  - **More (+)**: Press this button to add ten seconds of cooking time each time you press it.
  - **Less (-)**: Press this button to subtract ten seconds of cooking time each time you press it.

⓫ **Clock**

Press **Clock** to set the time of day.

⓬ **Cook Time**

Set a desired cook time manually.

Before Use

Setting the Clock

Set the current time to operate the microwave oven.

1 Press **STOP/Clear** and press **Clock**.

2 Press the number keys to set the correct time of day, and press **START/Enter**.

- To switch from AM to PM, press **Clock** until PM appears in the display and press **START/Enter**.

NOTE

- To reset the clock mode, press **Clock** or unplug the power cord and plug it back in.

Control Lock

Use this safety feature to lock the control panel before cleaning the oven or to prevent children from unsupervised use of the oven.

Setting Control Lock to ON

1 Press **STOP/Clear**.

2 Press and hold **STOP/Clear** until **Loc** appears in the display (approximately 3 seconds).

Canceling Control Lock

Press and hold **STOP/Clear** until **Loc** disappears in the display (approximately 3 seconds).

NOTE

- If set, the time of day reappears in the display after 1 second.
- If the oven is locked, **Loc** appears in the display when any key is pressed.
- Unlock the oven to resume normal use.

Kitchen Timer

The Timer function serves as an extra kitchen timer up to 99 minutes, 99 seconds. It chimes when the set time runs out. It does not start or stop cooking.

Setting Timer for 3 Minutes

1 Press **Timer On/Off**.

2 Press the number keys to set the time (**3**, **0**, and **0**), and press **START/Enter**.

- The timer starts immediately and the time counts down in the display.

3 To cancel the timer, press **Timer On/Off**.

NOTE

- When the time is over, the oven beeps continuously until you press **Timer On/Off**.

Setting the Cooktop Light

Use the Light settings to adjust the light for the cooktop below the microwave.

1 Press **Light On/Off** to turn the light on.

2 Press **Light On/Off** again to turn the light off.

Setting the Vent Fan Speed

Use this button to set the vent fan speed. The vent removes steam and other vapors from the cooking surface.

1 Press **Vent Hi/Low/Off** once to set the vent speed to high.

2 Press **Vent Hi/Low/Off** twice to set the vent speed to low.

3 Press **Vent Hi/Low/Off** again to turn the vent off.

NOTE

- Turn the microwave's vent fan on whenever you use the oven range cooktop below it. The fan captures smoke, steam, and odors and also prevents the heat from the cooktop from damaging microwave components.
- If the microwave is cooking, the vent fan turns on automatically if the sensors detect too much heat from the cooktop. This is designed to prevent microwave component damage.

Microwave Power Levels

This microwave oven is equipped with 10 power levels to give you maximum flexibility and control over cooking.

- When operating at 100 % power levels for prolonged periods, the output power will be reduced gradually to help prevent the unit from electrically overheating.

Power Level	Use
High 10 (100 %)	• Boiling water. • Browning ground beef. • Making candy. • Cooking whole poultry, poultry pieces, fish & vegetables. • Cooking tender cuts of meat.
9 (90%)	• Reheating rice, pasta & vegetables.
8 (80%)	• Reheating prepared foods quickly. • Reheating sandwiches.
7 (70%)	• Cooking egg, milk and cheese dishes. • Cooking cakes and breads. • Melting chocolate.
6 (60%)	• Cooking veal. • Cooking whole fish. • Cooking puddings and custard.
5 (50%)	• Cooking ham, whole poultry and lamb. • Cooking rib roast and sirloin tip.
4 (40%)	• Thawing meat, poultry and seafood.
3 (30%)	• Cooking less tender cuts of meat.
2 (20%)	• Taking chill out of fruit. • Softening butter.
1 (10%)	• Keeping casseroles and main dishes warm. • Softening butter and cream cheese.
0 (0%)	• Standing time

Quick Start and Stop

Using Quick Start

This feature allows you to start the microwave function without pressing the **START/Enter** button.

Cooking for 2 Minutes on High Power

Press **+30 seconds** four times.

- The oven starts immediately and the time counts down in the display.
- Press **+30 seconds** repeatedly to extend the cook time by 30 seconds every time the button is pressed (up to 99 min 59 seconds).

Interrupting Cooking

- To stop the oven during a cycle, open the door or Press **STOP/Clear** once.
- To restart cooking, close the door and press **START/Enter**.
- To stop the oven and clear the settings during a cycle, press **STOP/Clear** twice.

Manual Cooking

Using Manual Cooking

Unless you are using the auto cooking functions, the cook time and power level must be set manually.

Cooking for 5 Minutes, 30 Seconds at 80% Power

1. Press **Cook Time** and press the number keys to set the cook time (**5:30**).

2. Press **Power Level**, press the number **8** key to select power level 8, and press **START/Enter**.
   - When cooking is complete, a chime sounds and End appears in the display window.

NOTE

- If a power level is not selected, the oven defaults to 100% power.

Using Multi-Stage Cooking

Program an item to cook in 2 stages with different power levels and cooking times.

Cooking for 3 Minutes at 80% Power and then at 50% for 7 Minutes

1 Press **Cook Time** and enter the first cook time (**3**, **0**, and **0**).

2 Press **Power Level** and enter the power level (**8**).

3 Press **Cook Time** and enter the second cook time (**7**, **0**, and **0**).

4 Press **Power Level** and enter the power level (**5**).

5 Press **START/Enter**.

- When the first stage is over, you will hear two short tones as the oven begins the second cook stage.

Cooking Mode

Cook your favorite foods without having to select cooking times and power levels.

Quick Cooking Mode

Press the menu button to start cooking without pressing the **START/Enter** button. The oven automatically adjusts cooking times or power levels based on the amount of food.

Popcorn (3.0 or 3.5 oz.)

Pop only one package at a time. For best results, use a fresh bag of popcorn. Place a bag of prepackaged microwave popcorn on the center of the glass tray.

- Press **Popcorn** once for 3.5 oz. bag, and twice for 3.0 oz. bag.
  - When the cook time ends, a beep sounds and **End** appears in the display.

CAUTION

- Only pop popcorn in a microwavable container or in commercial packages designed for microwave ovens.
- Do not reuse popcorn bags.
- Do not leave microwave unattended while popping corn.
- Follow directions on bag.

Potato (1 - 4 potatoes, 8 oz. per potato)

Pierce potato with fork several times before cooking.

- Press **Potato** once for each potato (up to 4 potatoes).
  - When the cook time ends, a beep sounds and **End** appears in the display.
  - Standing time: 5 minutes

Pizza (1 - 3 slices, 5 oz. per slice)

Place pizza on a low plate and paper towel, and don't cover.

- Press **Pizza** once for each slice (up to 3 slices).
  - When the cook time ends, a beep sounds and **End** appears in the display.

Frozen Entree (10 or 20 oz.)

Cook commercially packaged microwave **Frozen Entree**.

Remove tray from outer carton.

Do not remove film cover, but cut it to vent.

- Press **Frozen Entree** once for 10 oz. package and twice for 20 oz. package.
  - When the cook time ends, a beep sounds and **End** appears in the display.

NOTE

- If desired, manually pause cooking halfway through, stir, and then resume cooking.

Auto Cook

1 Press **Auto Cook** repeatedly until the desired menu code appears in the display.

2 Use the number keys to enter the desired amount.

- When the cook time ends, a beep sounds and **End** appears in the display.

Auto Cook Menu

Refer to the information below to set the desired menu item and see the recommended amounts.

- **Ac-1 Fresh Vegetable** (1 - 4 cups)
  - Place vegetables in a microwavable bowl or casserole. Add water and cover with vented plastic wrap.
  - Add 2 tbsp water for 1 - 2 cups, add 4 tbsp water for 3 - 4 cups.
  - Standing time: 3 minutes
- **Ac-2 Frozen Vegetable** (1 - 4 cups)
  - Place vegetables in a microwavable bowl or casserole. Add water and cover with vented plastic wrap.
  - Add 2 tbsp water for 1 - 2 cups, add 4 tbsp water for 3 - 4 cups.
  - Standing time: 3 minutes
- **Ac-3 Rice** (1 - 2 cups)
  - Place in a microwavable bowl or casserole. Cover with vented plastic wrap.
  - Standing time: 5 minutes.
- **Ac-4 Casserole** (1 - 4 cups)
  - Place in a microwavable bowl or casserole. Cover with vented plastic wrap.
  - Standing time: 3 minutes.
  - Remove plastic wrap and stir if desired.

Auto Reheat

1 Press **Auto Reheat** repeatedly until the desired menu code appears in the display.

2 Use the number keys to enter the desired amount.

- When the cook time ends, a beep sounds and **End** appears in the display.

Auto Reheat Menu

Refer to the information below to set the desired menu item and see the recommended amounts.

- **rh-1 Dinner Plate** (1 serving: 10 oz. or 2 servings: 15 oz.)
  - Place food on a plate. Cover with vented plastic wrap.
  - Standing time: 3 minutes
- **rh-2 Soup / Sauce** (1 - 4 cups)
  - Place in shallow microwavable casserole. Cover with vented plastic wrap.
  - Standing time: 3 minutes
- **rh-3 Casserole** (1 - 4 cups)
  - Place in a microwavable bowl or casserole. Cover with vented plastic wrap.
  - Standing time: 3 minutes.
- **rh-4 Roll / Muffin** (1 - 4 pieces, 2 oz. per piece)
  - Place on paper towel. Do not cover.

Soften

The oven uses low power to soften foods (butter, ice cream, cream cheese and frozen juice).

1 Press **Soften** repeatedly until the desired menu code appears in the display.

2 Use the number keys to enter the desired amount.

Category	Press Number for Amount		
	1	2	3
Butter	1 stick	2 sticks	3 sticks
Ice Cream	Pint	Quart	Half Gallon
Cream Cheese	3 oz.	8 oz.	-
Frozen Juice	6 oz.	12 oz.	16 oz.

Soften Menu

Refer to the information below to set the desired menu item and see the recommended amounts.

- **1 Butter** (1 - 3 sticks, 1 stick: 4 oz.)
  - Cookware: Microwave-safe dish
  - Food temperature: Refrigerated
  - Instructions: Unwrap and place food in oven. Butter will be at room temperature and ready for use in a recipe.
- **2 Ice Cream** (Pint, Quart, Half Gallon)
  - Food temperature: Frozen
  - Instructions: Remove lid and cover. Place food in oven. Ice cream will be soft enough to make scooping easier.
- **3 Cream Cheese** (3 or 8 oz.)
  - Cookware: Microwave-safe dish
  - Food temperature: Refrigerated
  - Instructions: Unwrap and place food in oven. Cream cheese will be at room temperature and ready for use in a recipe.
- **4 Frozen Juice** (6, 12, or 16 oz.)
  - Food temperature: Frozen
  - Instructions: Remove top. Frozen juice will be soft enough to mix easily with water.

Melt

The oven uses low power to melt foods (butter or margarine, chocolate, marshmallows, or processed cheese food).

1 Press **Melt** repeatedly until the desired menu code appears in the display.

2 Use the number keys to enter the desired amount.

Category	Press Number for Amount		
	1	2	3
Butter	1 stick	2 sticks	3 sticks
Chocolate	4 oz.	8 oz.	-
Cheese	8 oz.	16 oz.	-
Marshmallows	5 oz.	10 oz.	-

Melt Menu

Refer to the information below to set the desired menu item and see the recommended amounts.

- **1 Butter** (1 - 3 sticks, 1 stick: 4 oz.)
  - Cookware: Microwave-safe bowl
  - Food temperature: Refrigerated
  - Instructions: Cut butter into equal sized pieces. Place in bowl and cover with paper towel. After heating, stir to complete melting.
- **2 Chocolate** (4 or 8 oz.)
  - Cookware: Microwave-safe bowl
  - Food temperature: Room
  - Instructions: Chocolate chips or squares of baking chocolate may be used. Unwrap and place food in oven. After heating, stir to complete melting.
- **3 Cheese** (8 or 16 oz.)
  - Cookware: Microwave-safe bowl
  - Food temperature: Refrigerated
  - Instructions: Use processed cheese food only. Unwrap and cut into cubes. Place food in oven. Stir the food at the beep. After heating, stir to complete melting.
- **4 Marshmallows**(5 or 10 oz.)
  - Cookware: Microwave-safe bowl
  - Food temperature: Room
  - Instructions: Unwrap and place food in oven. After heating, stir to complete melting.

Defrost Mode

The oven has 4 preset defrost cycles. The Defrost Menu shows the suggested defrost cycle for various foods. This defrost function conveniently chimes during the cycle to remind you to check, turn over, separate, or rearrange the food.

1 Press **Auto Defrost** repeatedly until the desired menu code appears in the display.

2 Use the number keys to enter the desired amount. Then press **START/Enter**.

- At the chime, open the oven door and turn the food over. Remove any food that has thawed. Return the items which are still frozen to the oven, and press **START/Enter** to complete the defrost cycle.

NOTE

- The countdown appears in the display after **START/Enter** is pressed. The oven chimes once during the defrost cycle.
- When using Defrost, enter the net weight in pounds and tenths of pounds (the weight of the food minus the container).

Defrost Menu

Refer to the information below to set the desired menu item and see the recommended amounts.

- **dEF1 Meat** (0.1 - 6.0 lbs)
  - Beef: Ground beef, round steak, stew cubes, tenderloin steak, pot roast, rib roast, rump roast, chuck roast, hamburger patties
  - Lamb: Chops (1 inch thick), rolled roast
  - Pork: Chops (0.5 inch thick), hot dogs, spareribs, country-style ribs, rolled roast, sausage
- **dEF2 Poultry** (0.1 - 6.0 lbs)
  - Poultry: Whole, cut-up, breast (boneless)
  - Rinse chicken cavity with tap water before cooking and let stand for 60 minutes after cooking for better results.
  - Cornish hens: Whole
  - Turkey: Breast
- **dEF3 Fish** (0.1 - 6.0 lbs)
  - Fish: Fillets, whole steaks
  - Shellfish: Crab meat, lobster tails, shrimp, scallops

- **dEF4 Bread** (0.1 - 1.0 lbs)
  - Sliced bread, buns, baguettes, etc.
  - Separate slices and place between paper towels or on flat plate. Turn food over at beep.
  - Standing time: 1-2 minutes

Cookware Guide

Microwave-Safe Cookware

Use microwavable cookware.

- **Ovenproof Glass**
  - Ovenproof glassware that is treated for high intensity heat so it is heat-resistant is microwave-safe.
  - Use utility dishes, loaf dishes, pie plates, cake plates, liquid measuring cups, casseroles and bowls without metal rims.
  - Do not use delicate glassware, such as tumblers or wine glasses, as these might shatter when heated.
- **China**
  - Use bowls, cups, serving plates, pottery, stoneware, ceramic, and platters without metal rims or handles. Many containers made of these materials are microwave-safe, but test them before use.
- **Plastic**
  - **Plastic Storage Containers**: Use plastic dishes, cups, semi-rigid freezer containers and plastic bags only for short cooking times. Do not use them when cooking food for long periods or at high power levels, as the hot food will eventually warp or melt the plastic.
  - **Plastic wrap (as a cover)**: Lay the plastic wrap loosely over the dish and press it to the sides. Vent plastic wrap by turning back one edge slightly to allow excess steam to escape. The dish should be deep enough so that the plastic wrap will not touch the food. As the food heats it may melt the plastic wrap wherever the wrap touches the food.
  - **Plastic Cooking Bags**: Provided they are specially made for cooking, cooking bags are microwave safe. Remember to make a slit in the bag so that steam can escape. Never use ordinary plastic bags for cooking in the microwave oven, as they will melt and rupture.
  - **Plastic Microwave Cookware**: A variety of shapes and sizes of microwave cookware are available. You may be able to use items you already have on hand rather than investing in new kitchen equipment.
- **Paper**
  - Use paper towels, waxed paper, paper napkins, and paper plates with no metal rims or design. Look for the manufacturer’s label for use in the microwave oven.
  - Paper plates and containers are convenient and safe to use in the microwave oven, provided that the cooking time is short and the foods to be cooked are low in fat and moisture. Paper towels are also very useful for wrapping foods and for lining baking trays in which greasy foods such as bacon are cooked.
  - Avoid colored paper products as the color may run. Do not use recycled paper products in the microwave oven. They may contain impurities which could cause arcing or fires when used in the microwave.
- **Tableware**
  - Many containers made of pottery, stoneware and ceramic are also microwave-safe. If in doubt consult the manufacturer’s literature or perform the microwave test.
  - Do not put plates with painted decoration in the oven, as the paint may contain metal and cause arcing.

Microwave-Unsafe Cookware

- **Metal Containers/Metal Decoration**
  - Never use metal or metal-rimmed cookware in the microwave oven.
  - Microwaves cannot penetrate metal. They will bounce off any metal object in the oven and cause arcing, an alarming phenomenon that resembles lightning.
  - Metal shields the food from microwave energy and produces uneven cooking. Also avoid metal skewers, thermometers, foil trays, metal-rimmed or metal-banded dinnerware, casserole dishes, etc. The metal rim interferes with normal cooking and may damage the oven.
- **Aluminum Foil**
  - Avoid large sheets of aluminum foil because they hinder cooking and may cause harmful arcing.
  - Use small pieces of foil to shield poultry legs and wings.
  - Keep ALL aluminum foil at least 1 inch from the side walls and door of the oven.

- **Wood**
  - Wood bowls and boards will dry out and may split or crack when you use them in the microwave oven.
  - Baskets react in the same way.
- **Tightly Covered Cookware**
  - Be sure to leave openings for steam to escape from covered containers.
  - Pierce plastic pouches of vegetables or other food items before cooking.
  - Tightly closed pouches could explode.
- **Brown Paper**
  - Avoid using brown paper bags.
  - They absorb too much heat and could burn.
- **Flawed or Chipped Cookware**
  - Any container that is cracked, flawed, or chipped may break in the oven.
- **Metal Twist Ties**
  - Remove metal twist ties from plastic or paper bags.
  - They become hot and could cause a fire.

Testing Cookware before Use

Most heat resistant and non-metallic cookware is safe for use in your oven. However, some cookware may contain materials that are not suitable for microwave use. Follow the steps below to find out if cookware can be used in the microwave.

1 Place the container in question and a glass measuring cup filled with water next to each other inside the oven.

2 Heat the container and glass measuring cup for 1 minute at HIGH power.
- If the water heats up but the container remains cool to the touch, the container is microwave-safe.
- If the temperature of the water does not change but the container becomes warm, it is not safe for use in the microwave oven.

⚠ CAUTION

- Some items with high lead or iron content are not suitable for microwave cooking.
- Cookware should be checked to ensure that it is suitable for use in the microwave.
- Always be careful when taking cookware out of the oven. Some dishes absorb heat from the cooked food and may be hot.

Cooking Guide

Cooking Tips

Carefully monitor the food in the microwave oven while it is cooking. Directions given in recipes to elevate, stir, etc., are the minimum steps recommended. If food is overcooked (dry), undercooked, or unevenly cooked, make adjustments before or during cooking to correct the problem. Ensure food reaches an internal temperature of 165 ℉ for safe consumption when cooking and reheating.

- **Overcooked or Dry Food**
  - **Sprinkling**: Sprinkle low-moisture foods such as roasts and vegetables with water before cooking, or cover them to retain moisture.
  - **Density**: Light, porous food such as cakes and breads cook more quickly than heavy, dense foods such as roasts and casseroles.
  - **Shielding**: Cover the corners of square dishes with small strips of aluminum foil to prevent overcooking. Don’t use too much foil, and secure the foil to the dish. Foil can cause arcing if it gets too close to the oven walls during cooking.
  - **Bones and Fat**: Bones conduct heat, and fat cooks more quickly than meat. Take care with bony or fatty cuts of meat.
- **Undercooked Food**
  - **Covering**: Cover food with a microwave-safe lid, parchment paper (not waxed paper), or plastic wrap to trap heat and steam and cook food more quickly.
  - **Standing Time**: Let food stand for several minutes after being removed from the oven to allow it to finish cooking and help flavors blend and develop.
  - **Quantity**: The more food you place in the oven, the longer the required cooking time.
  - **Temperature**: Ice-cold ingredients take much longer to cook than room temperature ingredients.
- **Unevenly Cooked Food**
  - **Stirring**: Stir food from the outside toward the center during cooking, as food at the outside of the dish heats more quickly.

- **Arranging**: Turn food over several times during cooking. The upper portion of thick foods cooks more quickly than the lower portion.
- **Shaping**: Place the thickest portions of foods like meat, poultry or fish toward the outside of the cookware to help them cook more evenly. If possible, shape foods into thin rounds or rings.

- **Foods with Skin, Shell or Membrane**
  - **Skin or Membrane**: Pierce the outsides of foods like potatoes, sausages, or egg whites or yolks before cooking.
  - **Shell**: Pierce or remove the shells from eggs, clams, oysters, or other shelled foods before cooking.
- **Defrosting Tips**
  - Remove fish, shellfish, meat, and poultry from its original wrapping paper or plastic package. Otherwise, the wrap close to the foods will hold steam and heat, which can cause the outer surface of the foods to be cooked.
  - Remove any metal twist ties.
  - Always slit or pierce plastic pouches or packaging.
  - Open containers such as cartons before they are placed in the oven.
  - If food is foil wrapped, remove foil and place the food in a suitable container.
  - The length of defrosting time varies depending on the shape of the food and on how solidly the food is frozen.
  - As food begins to defrost, separate the food into pieces so that they can defrost more easily.
  - Turn over food during defrosting or standing time. Separate into pieces and remove food as required.
  - Let food stand after defrosting. Food should still be somewhat icy in the center when removed from the oven.
  - When using Defrost, the weight to be entered is the net weight in pounds and tenths of pounds (the weight of the food minus the container).
  - Slit the skins of frozen food such as sausage.
  - Bend plastic pouches of food to ensure even defrosting.
  - Place food in a shallow container or in a microwave roasting dish to catch the drippings.
  - Always underestimate defrosting time. Food should still be somewhat icy in the center when removed from the oven. If defrosted food is still frozen solid in the center, return it to the microwave oven for more defrosting.
  - Depending on the shape of the food, some areas may defrost more quickly than others.
  - The shape of the package affects how quickly food will defrost. Shallow packages will defrost more quickly than a deep block.
  - For best results, shape ground meat into the form of a doughnut before freezing. When defrosting, scrape off thawed meat when the beep sounds and continue defrosting.
  - Use small pieces of aluminum foil to shield parts of food such as chicken wings, leg tips, fish tails, or areas that start to get warm. Make sure the foil does not touch the sides, top, or bottom of the oven. The foil can damage the oven lining.

Precautions

WARNING

- Do not use your microwave oven to cook eggs in the shell. Pressure can build up inside the shell, causing it to burst.
- Never operate the oven when it is empty. Food or water should always be in the oven during operation to absorb the microwave energy.

- To program the oven, press the center of each button firmly. When a button is pressed correctly, a beep sounds and the oven is activated. Do not press several buttons at once.
- Do not strike the control panel with silverware, utensils, etc. It may be damaged or broken.
- Always be careful when taking cookware out of the oven. Some dishes absorb heat from the cooked food and may be hot. See the Cookware Guide section for more information.
- To avoid breakage, allow cookware to cool before rinsing or submerging in water. Always allow the turntable to cool before removing it from the oven.
- Do not use the oven to dry newspapers or clothes. They may catch fire.
- Use thermometers that have been approved for microwave oven cooking.
- The turntable must always be in place when you operate the oven.

SMART FUNCTIONS

Smart Diagnosis™ Feature

This feature is only available on models with the or logo.

Use this feature to help you diagnose and solve problems with your appliance.

NOTE

- For reasons not attributable to LGE's negligence, the service may not operate due to external factors such as, but not limited to, Wi-Fi unavailability, Wi-Fi disconnection, local app store policy, or app unavailability.
- The feature may be subject to change without prior notice and may have a different form depending on where you are located.

Using LG ThinQ to Diagnose Issues

If you experience a problem with your Wi-Fi equipped appliance, it can transmit troubleshooting data to a smartphone using the **LG ThinQ** application.

- Launch the **LG ThinQ** application and select the **Smart Diagnosis** feature in the menu. Follow the instructions provided in the **LG ThinQ** application.

Using Audible Diagnosis to Diagnose Issues

Follow the instructions below to use the audible diagnosis method.

- Launch the **LG ThinQ** application and select the **Smart Diagnosis** feature in the menu. Follow the instructions for audible diagnosis provided in the **LG ThinQ** application.

1 Press the **START/Enter** button for three seconds.

- If the display has been locked, you must deactivate the lock and then reactivate it.

2 Hold the mouthpiece of your phone in front of the **Smart Diagnosis** logo located on the control panel.

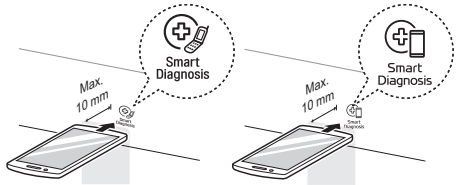

3 Keep the phone in place until the tone transmission has finished. The display will count down the time. Once the countdown is over and the tones have stopped, the diagnosis will be displayed in the application.

NOTE

- For best results, do not move the phone while the tones are being transmitted.

MAINTENANCE

Cleaning

Cleaning the Interior

Clean the inside of the microwave weekly or as needed.

1 Use a damp cloth to clean the surfaces of the door and wipe out crumbs between the door and the frame.

2 Remove the turntable and support ring. Rinse them off using mild dish soap and a soft cloth or clean them in the dishwasher. Make sure all parts are dry before reassembling.

3 Remove greasy spatters with a mild dish soap and a soft cloth, rinse, and then dry. Do not use harsh or abrasive cleaners.

- Wipe spatters immediately with a wet paper towel, especially after cooking chicken or bacon.
- If steam accumulates inside or outside of the oven door, wipe the panels with a soft cloth.
- For stubborn soil, boil a cup of water in the oven for 2 to 3 minutes. Steam will soften the soil. To get rid of odors inside the oven, boil a cup of water with some lemon juice or vinegar in it. Use caution when removing the water, as it will be hot and could cause burns.
- If some induction cleaners containing abrasives are used, the appearance of the product may be damaged.

Cleaning the Exterior

1 Clean the outside of the oven with soap and water.

2 Rinse with clean water and dry with a soft cloth or paper towel.

- To prevent damage to the internal working parts of the oven, do not allow water to seep into the ventilation openings.
- The door and door seals should be kept clean. Use warm, soapy water to clean. Rinse off soap residue and dry thoroughly.
- Frequently wipe metal parts with a damp cloth.

Cleaning the Control Panel and Glass

1 Open the door to prevent the oven from accidentally starting.

2 Gently wipe the control panel clean with a soft, damp cloth and mild dish soap. Do not use harsh or abrasive cleaners.

3 To clean the glass, spray glass cleaner on a damp cloth and wipe. Do not spray glass cleaner directly onto the microwave.

4 Press **STOP/Clear** after cleaning.

Cleaning the Accessories

Wash the glass tray and rotating ring in mild, sudsy water. For heavily soiled areas, use a mild cleanser and scouring sponge. Dry completely before use.

- The glass tray and rotating ring are dishwasher safe.

NOTE

- Abrasive cleansers, steel wool pads, gritty wash cloths, some paper towels, and other abrasive surfaces can damage the control panel and the interior and exterior oven surfaces.

Cleaning the Grease Filters

Filters should be cleaned at least once a month or more often if needed.

1 To remove, slide the grease filter back slightly and pull it downward.

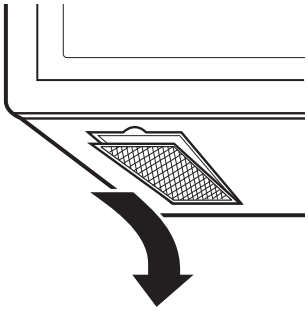

2 Soak grease filters in hot water and a mild detergent.

3 Rinse well and shake to dry.

- Do not use ammonia or place in a dishwasher. The aluminum will darken.

4 To reinstall, slide the filter in on the back side and push it upward to secure it.

NOTE

- Do not operate the hood without the filters in place.

Replacing Parts

Replacing the Charcoal Filter

If your oven is vented inside, the charcoal filter should be replaced every 6 to 12 months, and more often if necessary. The charcoal filter cannot be cleaned. To order a new charcoal filter, contact an LG Customer Information Center or visit the lg.com website.

1 Unplug the power cord and wear gloves.

2 Remove the vent cover screw. Open the oven door, hold both sides of the vent cover and remove it.

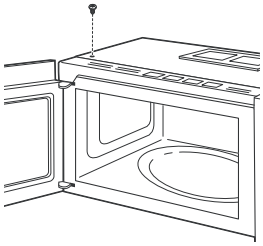

3 Remove the old charcoal filter.

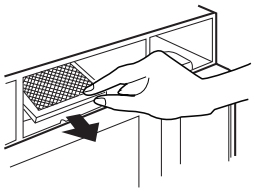

4 Slide a new charcoal filter into place.

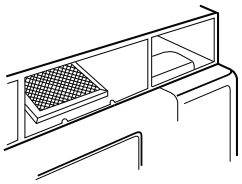

5 Slide the bottom of the vent cover into place. Push the top until it snaps into place. Tighten the screw to secure the vent grille in place.

6 Close the oven door, plug in the power cord and set the clock.

Replacing the Oven Light

1 Unplug the power cord and put on gloves.

2 Remove the 2 vent grille mounting screws. Slide the vent grille forward to remove it.

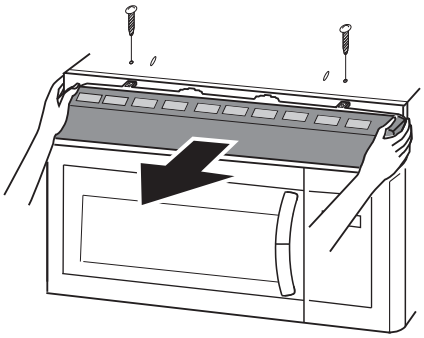

3 Remove the light cover screw.

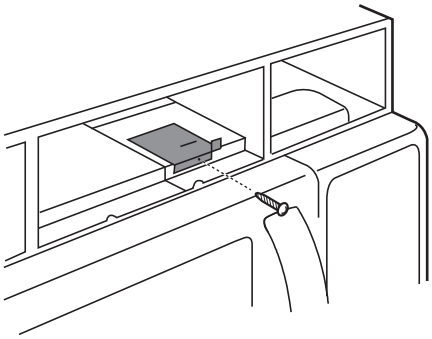

4 Pull the light cover forward and lift up the bulb holder.

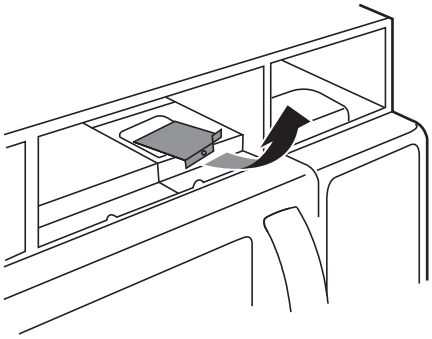

5 Replace the bulb.

- Use a 125-130 V, 30 W or 40 W incandescent bulb, or a 125 V, 1.5 W LED bulb.

6 Insert the light cover, and tighten the light cover screw in place.

7 Slide the bottom of the vent grille into place. Push the top in until it snaps into place. Insert and tighten the vent grille mounting screws.

8 Plug in the power cord and set the clock.

TROUBLESHOOTING

FAQs

Frequently Asked Questions

Q: Will the oven be damaged if it operates while empty?

A: Yes. Never operate the oven while it is empty or without the glass tray.

Q: Does microwave energy pass through the viewing screen in the door?

A: No. The metal screen bounces the energy back to the oven cavity. The holes (or ports) allow only light to pass through. They do not let microwave energy pass through.

Q: Why do I see a light reflection around the outer case?

A: This light is from the oven light which is located between the oven cavity and the outer wall of the oven.

Q: What are the various sounds I hear when the oven is operating?

A: The clicking sound is caused by a mechanical switch turning the microwave oven's magnetron ON and OFF.
The heavy hum and clunk is from the change in power the magnetron draws as it is turned ON and OFF by a mechanical switch. The change in blower speed is from the change in line voltage caused by the magnetron being turned ON and OFF.

Q: Can my oven be damaged if food is cooked for too long?

A: Like any other cooking appliance, it is possible to overcook food to the point that the food creates smoke and even possibly fire, and damages the inside of the oven. It is always best to be near the oven while you are cooking.

Q: Why is a standing time recommended after microwave cooking time is over?

A: Standing time allows foods to continue cooking evenly for a few minutes after the actual microwave oven cooking cycle. The amount of standing time depends upon the density of the foods.

Q: Why is additional time required for cooking food stored in the refrigerator?

A: As in conventional cooking, the initial temperature of food affects total cooking time. You need more time to cook food taken out of a refrigerator than for food at room temperature.

Q: Sometimes the door of my oven appears wavy. Is this normal?

A: This appearance is normal and does not affect the operation of your oven.

Q: Why does the glass tray not move?

A: The correct side of the tray should be facing up and the tray should sit firmly on the center hub. The support is not operating correctly. Reinstall the glass tray and restart the oven. Cooking without the glass tray can give you poor results. On some models, the turntable may be turned off. See Setting the Turntable in the Operation section.

Q: Why does the dish become hot when I microwave food in it? I thought that this should not happen.

A: As the food becomes hot it will conduct the heat to the dish. Use hot pads to remove food after cooking.

Q: What does standing time mean?

A: Standing time means that food should be taken out of the oven and covered for additional time after cooking. This process allows the cooking to finish, saves energy, and frees the oven for other purposes.

Q: Can I pop popcorn in my oven? How do I get the best results?

A: Yes. Pop packaged microwave popcorn following manufacturer’s guidelines or use the preprogrammed Popcorn button.
Do not use regular paper bags. Use the listening test by stopping the oven as soon as the popping slows to a pop every one or two seconds. Do not try to repop unpopped kernels. You can also use special microwave poppers. When using a popper, be sure to follow manufacturer’s directions. Do not pop popcorn in glass utensils.

Q: Why does steam come out of the air exhaust vent?

A: Steam is normally produced during cooking. The oven has been designed to vent steam out of the vent.

Q: Why aren't the function buttons working?

A: Make sure that the oven is not in Control Lock mode. "Loc" will show in the display if Control Lock is activated. To deactivate Control Lock, press and hold **STOP/Clear** for three seconds.

Q: Why is the oven floor warm even when the oven has not been used?

A: The cooktop light is located below the oven floor. When the light is on, the heat it produces may cause the oven floor to become warm. This is normal.

Before Calling for Service

Review this section before calling for service; doing so will save you both time and money.

For detailed information or videos, visit www.lg.com for the troubleshooting page.

Operation

Problem	Possible Cause & Solution
Microwave oven does not start	**Power cord is unplugged, door is open, or cooking time has not been set.** • Plug in power cord or check for a blown circuit fuse or a tripped main circuit breaker. • Close oven door. • Set cooking time.
	Timer function started. • If the display shows a time counting down but the oven is not cooking, check to see if a **Timer** function has been started instead of a cooking function.
Oven light does not work	**The light bulb is loose or defective, or the power cord is unplugged.** • Replace the light bulb properly. • Plug in power cord.
Arcing or Sparking	**Cookware is not microwave safe, or the oven is being operated while it is empty.** • Use microwave-safe cookware. When in doubt, test cookware before use. • Do not operate oven while it is empty.
	Wire twist-ties have not been removed from paper or plastic bags, or the metal rack was installed improperly. • Remove wire twist-ties from paper or plastic bags. • Place the rack securely in the four plastic supports.
Incorrect Time of Day	**Power interruption.** • Reset the time. See Setting the Clock section to reset time of day.
Unevenly Cooked Foods	**Cookware is not microwave safe, or cook settings were wrong.** • Test cookware to make sure it is microwave safe. • Do not cook without the glass tray. • Turn or stir food while cooking. • Defrost food completely before cooking. • Use correct cook time and power level. • Check position of aluminum strips used to prevent overcooking.
Overcooked Foods	**Cooking settings and methods are wrong.** • Change cook time or power level.
Undercooked Foods	**Cookware is not microwave safe, or cook settings were wrong.** • Test that cookware is microwave safe. • Defrost food completely before cooking. • Change cook time or power level. • Make sure that ventilation ports are not blocked.
Improper Defrosting	**Cookware is not microwave safe, or cook settings were wrong.** • Test that cookware is microwave safe. • Change defrost time or weight. • Turn or stir food during defrost cycle.

LIMITED WARRANTY

CANADA

TERMS AND CONDITIONS

ARBITRATION NOTICE: THIS LIMITED WARRANTY CONTAINS AN ARBITRATION PROVISION THAT REQUIRES YOU AND LG TO RESOLVE DISPUTES BY BINDING ARBITRATION INSTEAD OF IN COURT, UNLESS THE LAWS OF YOUR PROVINCE OR TERRITORY DO NOT PERMIT THAT, OR, IN OTHER JURISDICTIONS, IF YOU CHOOSE TO OPT OUT. FOR FURTHER CLARITY, THIS ARBITRATION PROVISION IS NOT APPLICABLE TO CONSUMERS RESIDING IN ONTARIO, BRITISH COLUMBIA OR QUÉBEC. IN ARBITRATION, CLASS ACTIONS AND JURY TRIALS ARE NOT PERMITTED. PLEASE SEE THE SECTION TITLED "PROCEDURE FOR RESOLVING DISPUTES" BELOW.

QUEBEC ONLY: LG stands behind its products and makes every reasonable effort to ensure its products can be maintained and repaired, as required. You may access the catalogue of available parts and services at https://www.lg.com/ca_en/support/. HOWEVER, LG IN NO WAY GUARANTEES AND MAKES NO REPRESENTATIONS REGARDING THE AVAILABILITY OF ANY SPECIFIC SPARE OR REPLACEMENT PART, REPAIR SERVICE OR INFORMATION OR INSTRUCTIONS FOR SUCH MAINTENANCE AT ANY TIME. LG EXPRESSLY DISCLAIMS ANY GUARANTEE, WARRANTY OR OBLIGATION IN RESPECT OF THAT AVAILABILITY.

Should your LG Microwave Oven ("Product") fail due to a defect in materials or workmanship under normal and proper use, during the warranty period set forth below, LG Electronics Canada, Inc. ("LGECI") will, at its option, repair or replace the Product upon receipt of proof of the original retail purchase. This limited warranty is valid only to the original retail purchaser of the Product and applies only to a Product distributed, purchased and used within Canada, as determined at the sole discretion of LGECI.

WARRANTY PERIOD: (Note: If the original date of purchase cannot be verified, the warranty will begin sixty (60) days from the date of manufacture).	
Over-the-Range / All Convection / Microwaves in Built-in application / All other Microwave Oven	**Extended Component Warranty (Parts Only)**
One (1) year from the date of original retail purchase	Ten (10) years from the date of original retail purchase
Parts and Labor (In-Home; OTR & Convection) (internal/functional parts only)	Inverter Magnetron Only

- Replacement products and parts are warranted for the remaining portion of the original warranty period or ninety (90) days, whichever is greater.
- Replacement products and parts may be new, reconditioned, refurbished, or otherwise factory remanufactured, all at the sole discretion of LGECI.
- Proof of original retail purchase specifying the Product model and date of purchase is required to obtain warranty service under this Limited Warranty.

DISCLAIMER:

IF YOU ARE A CONSUMER SUBJECT TO QUÉBEC, BRITISH COLUMBIA OR ONTARIO'S CONSUMER PROTECTION LEGISLATION, THE EXCLUSION OF WARRANTIES CONTAINED IN THIS SECTION DO NOT EXCLUDE OR LIMIT THE RIGHTS AND REMEDIES THAT YOU MAY HAVE UNDER SUCH ACT, INCLUDING THE RIGHT TO MAKE A CLAIM UNDER ANY OF THE STATUTORY WARRANTIES PROVIDED THEREUNDER.

LGECI'S SOLE LIABILITY IS LIMITED TO THE LIMITED WARRANTY SET OUT ABOVE, UNLESS SUCH LIMITATION IS PROHIBITED BY THE LAWS OF THE PROVINCE IN WHICH YOU RESIDE. EXCEPT AS EXPRESSLY PROVIDED ABOVE, OR IF OTHERWISE PROHIBITED BY THE LAW OF THE PROVINCE IN WHICH YOU RESIDE, LGECI DOES NOT MAKE ANY OTHER WARRANTIES OR CONDITIONS RESPECTING THE PRODUCT, AND HEREBY DISCLAIMS, ALL OTHER WARRANTIES AND CONDITIONS RESPECTING THE PRODUCT, WHETHER EXPRESS OR IMPLIED, INCLUDING BUT NOT LIMITED TO, ANY IMPLIED WARRANTY OR CONDITION OF MERCHANTABILITY OR FITNESS FOR A PARTICULAR PURPOSE, AND

NO REPRESENTATIONS SHALL BE BINDING ON LGECI. LGECI DOES NOT AUTHORIZE ANY PERSON TO CREATE OR ASSUME FOR IT ANY OTHER WARRANTY OBLIGATION OR LIABILITY IN CONNECTION WITH THE PRODUCT. TO THE EXTENT THAT ANY WARRANTY OR CONDITION IS IMPLIED BY LAW, IT IS LIMITED TO THE WARRANTY PERIOD SET OUT ABOVE. UNDER NO CIRCUMSTANCES SHALL LGECI, THE MANUFACTURER OR DISTRIBUTOR OF THE PRODUCT, BE LIABLE FOR ANY INCIDENTAL, CONSEQUENTIAL, SPECIAL, DIRECT, INDIRECT, PUNITIVE OR EXEMPLARY DAMAGES, INCLUDING, WITHOUT LIMITATION, LOSS OF GOODWILL, LOST PROFITS, LOSS OF ANTICIPATED PROFITS, LOST REVENUE, LOSS OF USE, OR ANY OTHER DAMAGE, WHETHER ARISING DIRECTLY OR INDIRECTLY FROM ANY CONTRACTUAL BREACH, FUNDAMENTAL BREACH, TORT OR OTHERWISE, OR FROM ANY ACTS OR OMISSIONS. LGECI'S TOTAL LIABILITY, IF ANY, SHALL NOT EXCEED THE PURCHASE PRICE PAID BY YOU FOR THE PRODUCT.

This Limited Warranty gives you specific legal rights. You may also have other rights that vary from province to province depending on applicable provincial laws. Any term of this Limited Warranty that negates or varies any implied condition or warranty under provincial law is severable where it conflicts with such provincial law without affecting the remainder of this warranty's terms.

THIS LIMITED WARRANTY DOES NOT COVER:

- Service trips to i) deliver, pick up, or install or; educate on how to operate the Product; ii) correct wiring; or iii) correct unauthorized repairs or installations of the Product;
- Damage or failure of the Product to perform during power failures and interrupted or inadequate electrical service;
- Damage or failure resulting from operating the Product in a corrosive atmosphere or contrary to the instructions outlined in the Product's owner's manual;
- Damage or failure to the Product caused by accidents, pests and vermin, lightning, wind, fire, floods, acts of God, or any other causes beyond the control of LGECI or the manufacturer;
- Damage or failure resulting from misuse, abuse, improper installation, repair, or maintenance of the Product. Improper repair includes use of parts not authorized or specified by LGECI. Improper installation or maintenance includes installation or maintenance contrary to the Product's owner's manual;.
- Damage or failure caused by unauthorized modification or alteration of the Product, or if used for other than the intended household purpose/use of the Product, or damage or failure resulting from any water leakage due to improper installation of the Product;
- Damage or failure caused by incorrect electrical current, voltage or ventilation codes;
- Damage or failure caused by use that is other than normal household use, including, without limitation, commercial or industrial use, including use in commercial offices or recreational facilities, or as otherwise outlined in the Product's owner's manual;
- Damage or failure caused by transportation and handling, including scratches, dents, chips and/or other damage to the finish of the Product, unless such damage results from defects in materials or workmanship and is reported to LGECI within one (1) week of delivery of the Products;
- Damage or missing items to any display, open box, refurbished or discounted Product;
- Refurbished Product or any Product sold "As Is", "Where Is", "With all Faults", or any similar disclaimer;
- Products with original serial numbers that have been removed, altered or cannot be readily determined at the discretion of LGECI;
- Increases in utility costs and additional utility expenses in any way associated with the Product;
- Any noises associated with normal operation of the Product;
- Replacement of light bulbs, filters, fuses or any other consumable parts;
- Replacement of any part that was not originally included with the Product;
- Costs associated with removal and/or reinstallation of the Product for repairs; and
- Shelves, drawers, handle and accessories to the Product, except for internal/functional parts covered under this Limited Warranty.

- Coverage for "in Home" repairs, for products in-warranty, will be provided if the Product is within a 150 km radius from the nearest authorized service center (ASC), as determined by LG Canada. If your Product is located outside a 150 km radius from a ASC, as determined by LG Canada, it will be your responsibility to bring the Product, at your sole expense, to the ASC for in-warranty repair.

All costs and expenses associated with the above excluded circumstances, listed under the heading, This Limited Warranty Does Not Cover, shall be borne by the consumer.

TO OBTAIN WARRANTY SERVICE AND ADDITIONAL INFORMATION, PLEASE CALL OR VISIT OUR WEBSITE:

Call 1-888-542-2623 (8 am - 9 pm EST, 365 days) and select the appropriate option from the menu, or visit our website at http://www.lg.com

NOT COVERED BY WARRANTY

Problem	Cause	Solution
Unit has no power	• House power turned off (power supply) • Tripped breaker. • The power cord is not installed properly.	• Check house power supply. • Check proper power cord connection. • Check extension cord.
Spark / Arcing	Aluminum foil or metal utensil used in microwave mode.	• Check user instructions. • DO NOT use aluminum foil or metal utensils in microwave mode.

Problem	Cause	Solution
Vent is not working. • Weak or no ventilation. • Abnormal noise during operation. • Product overheating.	• Improper blower unit direction or installation. • Improper ductwork or damper connection. 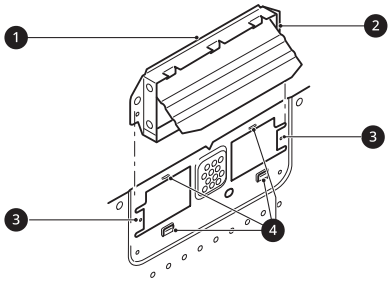 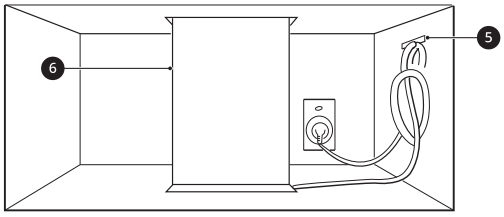 ❶ Exhaust Adapter ❷ Damper (hinge side up) ❸ Guides ❹ Locking Tabs ❺ Cable Clamping for Power Cord ❻ Duct	• Check blower unit direction and reinstall if necessary. • Properly align the exhaust operation ports and blower plate opening. • Blower unit exhaust ports should be completely exposed to the outside. • After installation, check the air ventilation path

Problem	Cause	Solution
Microwave oven installation issue. • Vibration noise • Unit is not level • Installation damage	• Mounting bracket screw not fixed completely. • Mounting plate not aligned. - 3/16" Hole on Studs, 5/8" Hole on Drywall Only 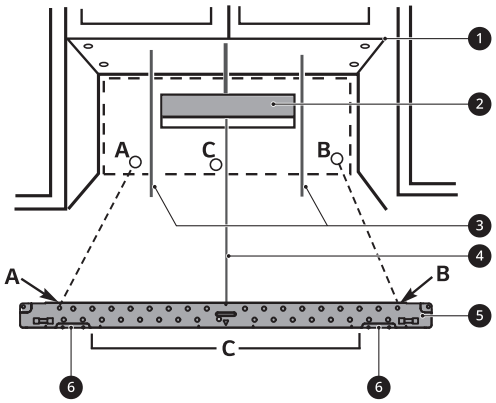 ❶ Minimum 66" from the floor ❷ For Wall Venting Only ❸ Draw Lines on Studs ❹ Draw Center Line ❺ Mounting Plate ❻ Support Tab 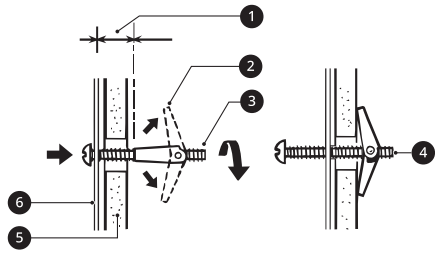 ❶ Space More Than Wall Thickness ❷ Toggle Wings ❸ Toggle Bolt ❹ Bolt End ❺ Wall ❻ Mounting Plate • Product carried/installed improperly.	Check with installer first.

PROCEDURE FOR RESOLVING DISPUTES:

EXCEPT WHERE PROHIBITED AT LAW (INCLUDING WITH RESPECT TO QUÉBEC, BRITISH COLUMBIA AND ONTARIO CONSUMERS), ALL DISPUTES BETWEEN YOU AND LG ARISING OUT OF OR RELATING IN ANY WAY TO THIS LIMITED WARRANTY OR THE PRODUCT SHALL BE RESOLVED EXCLUSIVELY THROUGH BINDING ARBITRATION, AND NOT IN A COURT OF GENERAL JURISDICTION. EXCEPT WHERE PROHIBITED AT LAW (INCLUDING WITH RESPECT TO QUÉBEC, BRITISH COLUMBIA AND ONTARIO CONSUMERS), YOU AND LG BOTH IRREVOCABLY AGREE TO WAIVE THE RIGHT TO A JURY TRIAL AND TO BRING OR PARTICIPATE IN A CLASS ACTION.

Definitions. For the purposes of this section, references to “LG” mean LG Electronics Canada, Inc., its parents, subsidiaries and affiliates, and each of their officers, directors, employees, agents, beneficiaries, predecessors in interest, successors, assigns and suppliers; references to “dispute” or “claim” shall include any dispute, claim or controversy of any kind whatsoever (whether based in contract, tort, statute, regulation, ordinance, fraud, misrepresentation or any other legal or equitable theory) arising out of or relating in any way to the sale, condition or performance of the product or this Limited Warranty.

Notice of Dispute. In the event you intend to commence an arbitration proceeding, you must first notify LG in writing at least 30 days in advance of initiating the arbitration by sending a letter to LGECI Legal Team at 20 Norelco Drive, North York, Ontario, Canada M9L 2X6 (the “Notice of Dispute”). You and LG agree to engage in good faith discussions in an attempt to amicably resolve your claim. The notice must provide your name, address, and telephone number; identify the product that is the subject of the claim; and describe the nature of the claim and the relief being sought. If you and LG are unable to resolve the dispute within 30 days of LG’s receipt of the Notice of Dispute, the dispute shall be resolved by binding arbitration in accordance with the procedure set out herein. You and LG both agree that, during the arbitration proceeding, the terms (including any amount) of any settlement offer made by either you or LG will not be disclosed to the arbitrator until the arbitrator determines the dispute.

Agreement to Binding Arbitration and Class Action Waiver. Upon failure to resolve the dispute during the 30 day period after LG’s receipt of the Notice of Dispute, you and LG agree to resolve any claims between you and LG only by binding arbitration on an individual basis, unless you opt out as provided below, or you reside in a jurisdiction that prevents full application of this clause in the circumstances of the claims at issue (in which case if you are a consumer, this clause will only apply if you expressly agree to the arbitration). To the extent permitted by applicable law, any dispute between you and LG shall not be combined or consolidated with a dispute involving any other person’s or entity’s product or claim. More specifically, without limitation of the foregoing, except to the extent such a prohibition is not permitted at law, any dispute between you and LG shall not under any circumstances proceed as part of a class or representative action. Instead of arbitration, either party may bring an individual action in small claims court, but that small claims court action may not be brought on a class or representative basis except to the extent this prohibition is not permitted at law in your province or territory of jurisdiction as it relates to the claims at issue between you and LG. This does not apply to consumers in Ontario, British Columbia and Québec. In accordance with provincial legislation, the consumer and LG may agree to resolve the dispute using any procedure available, including commencing the action before the competent courts of those provinces.

Arbitration Rules and Procedures. To begin arbitration of a claim, either you or LG must make a written demand for arbitration. The arbitration will be private and confidential, and conducted on a simplified and expedited basis before a single arbitrator chosen by the parties under the provincial or territorial commercial arbitration law and rules of the province or territory of your residence. You must also send a copy of your written demand to LG at LG Electronics, Canada, Inc., Attn: Legal Department- Arbitration, 20 Norelco Drive, North York, Ontario M9L 2X6. This arbitration provision is governed by your applicable provincial or territorial commercial arbitration legislation. For consumers in Ontario, British Columbia and Québec, the applicable arbitration legislation only applies if consumers agree to submit the dispute to arbitration. Judgment may be entered on the arbitrator’s award in any court of competent jurisdiction. All issues are for the arbitrator to decide, except that, issues relating to the scope and enforceability of the arbitration provision and to the arbitrability of the dispute are for the court to decide. The arbitrator is bound by the terms of this provision.

Governing Law. The law of the province or territory of your purchase shall govern this Limited Warranty and any disputes between you and LG except to the extent that such law is preempted by or inconsistent with applicable federal or provincial/territorial law. Should arbitration not be permitted for any claim, action, dispute or controversy between you and LG, you and LG attorn to the exclusive jurisdiction of the courts of the province or territory of your purchase for the resolution of the claim, action, dispute or controversy between you and LG.

Fees/Costs. You do not need to pay any fee to begin an arbitration. Upon receipt of your written demand for arbitration, LG will promptly pay all arbitration filing fees unless you seek more than $25,000 in damages, in which case the payment of these fees will be governed by the applicable arbitration rules. Except as otherwise provided for herein, LG will pay all filing, administration and arbitrator fees for any arbitration initiated in accordance with the applicable arbitration rules and this arbitration provision. If you prevail in the arbitration, LG will pay your attorneys’ fees and expenses as long as they are reasonable, by considering factors including, but not limited to, the purchase amount and claim amount. Notwithstanding the foregoing, if applicable law allows for an award of reasonable attorneys’ fees and expenses, an

arbitrator can award them to the same extent that a court would. If the arbitrator finds either the substance of your claim or the relief sought in the demand is frivolous or brought for an improper purpose (as measured by the applicable laws), then the payment of all arbitration fees will be governed by the applicable arbitration rules. In such a situation, you agree to reimburse LG for all monies previously disbursed by it that are otherwise your obligation to pay under the applicable arbitration rules. Except as otherwise provided for, LG waives any rights it may have to seek attorneys' fees and expenses from you if LG prevails in the arbitration.

Hearings and Location. If your claim is for $25,000 or less, you may choose to have the arbitration conducted solely (1) on the basis of documents submitted to the arbitrator, (2) through a telephonic hearing, or (3) by an in-person hearing as established by the applicable arbitration rules. If your claim exceeds $25,000, the right to a hearing will be determined by the applicable arbitration rules. Any in-person arbitration hearings will be held at the nearest, most mutually-convenient arbitration location available within the province or territory in which you reside unless you and LG both agree to another location or agree to a telephonic arbitration.

Severability and Waiver. If any portion of this Limited Warranty (including these arbitration procedures) is unenforceable, the remaining provisions will continue in full force and effect to the maximum extent permitted by applicable law. Should LG fail to enforce strict performance of any provision of this Limited Warranty (including these arbitration procedures), it does not mean that LG intends to waive or has waived any provision or part of this Limited Warranty.

Opt Out. The arbitration provision requires you and LG to resolve disputes by binding arbitration instead of court, unless the laws of your province or territory do not permit that, or, in other jurisdictions, if you choose to opt out. The arbitration provision does not apply to consumers in Ontario, British Columbia and Québec.

For individuals that fall within the binding arbitration provisions, you may opt out of this dispute resolution procedure. If you opt out, neither you nor LG can require the other to participate in an arbitration proceeding. To opt out, you must send notice to LG no later than 30 calendar days from the date of the first consumer purchaser's purchase of the product by either (i) sending an e-mail to optout@lge.com, with the subject line: "Arbitration Opt Out;" or (ii) calling 1-800-980-2973. You must include in the opt out e-mail or provide by telephone: (a) your name and address; (b) the date on which the product was purchased; (c) the product model name or model number; and (d) the serial number (the serial number can be found (i) on the product; or (ii) online by accessing https://www.lg.com/ca_en/findmodel_serial/).

In the event that you "Opt Out", the law of the province or territory of your residence shall govern this Limited Warranty and any disputes between you and LG except to the extent that such law is preempted by or inconsistent with applicable federal or provincial/territorial law. Should arbitration not be permitted for any claim, action, dispute or controversy between you and LG, you and LG agree to attorn to the exclusive jurisdiction of the courts of the province or territory of your residence for the resolution of the claim, action, dispute or controversy between you and LG.

You may only opt out of the dispute resolution procedure in the manner described above (that is, by e-mail or telephone); no other form of notice will be effective to opt out of this dispute resolution procedure. Opting out of this dispute resolution procedure will not affect the coverage of the Limited Warranty in any way, and you will continue to enjoy the full benefits of the Limited Warranty. If you keep this product and do not opt out, then you accept all terms and conditions of the arbitration provision described above.

Conflict of Terms. In the event of a conflict or inconsistency between the terms of this Limited Warranty and the End User License Agreement ("EULA") in regards to dispute resolution, the terms of this Limited Warranty shall control and govern the rights and obligations of the parties and shall take precedence over the EULA.

Memo

LG Customer Information Center	Centro de Información al Cliente LG	Centre de Service à la Clientèle de LG
For inquiries or comments, visit **www.lg.com** or call:	Para consultas o comentarios, visite **www.lg.com** o llame por teléfono:	Pour des questions ou des commentaires, visitez **www.lg.com/ca_fr** ou appelez :
1-800-243-0000 U.S.A.	1-800-243-0000 EE.UU.	1-800-243-0000 ÉTATS-UNIS
1-888-542-2623 CANADA	1-888-542-2623 CANADÁ	1-888-542-2623 CANADA
Register your product Online!	¡Registre su producto en línea!	Enregistrez votre produit en ligne!
www.lg.com	www.lg.com	www.lg.com/ca_fr